5 Port Mechanical Valve
Metal Seal
Series VZM400

Compact design, large flow capacity 9.9 mm²

High cycle rate, long life/300 c.p.m. or less

Piping possible to any EXH port.

Proper countermeasures can be taken for applications in which the noise of the exhaust could cause problems to the surroundings.

External pilot model available. (Option)

Foot bracket and manifold mounting possible.

Specifications

Fluid	Air/Inert gas
Operating pressure	0.15 to 1.0 MPa (1)
Ambient and fluid temperature	–5 to 60°C (No freezing)
Effective area	9.9 mm²
Maximum frequency (Mechanical operation type)	300 c.p.m. or less
Lubrication	Not required (Use turbine oil class 1 ISO VG32, if lubricated.)
Port size	Main valve/Rc 1/8 (6A)
	Pilot valve (EXH)/M5 x 0.8
Option	Foot bracket (2)
Weight (Basic)	150 g

∗ Please contact SMC for manifold mounting style.
Note 1) External pilot type Main valve: 0 to 1.0 MPa
Pilot valve: 0.15 to 1.0 MPa
Note 2) The standard body can not be retrofitted with a foot bracket.

Model

	Actuator	Model	Actuator part no.	Application
Mechanical operation	Basic	**VZM450-01-00**	—	—
	Roller lever	**VZM450-01-01**	VM-01C	Polyacetal roller
		VZM450-01-01S	VM-01CS	Hard steel roller
	One way roller lever	**VZM450-01-02**	VM-02C	Polyacetal roller
		VZM450-01-02S	VM-02CS	Hard steel roller
	Straight plunger	**VZM450-01-05**	VM-05C	—
	Roller plunger	**VZM450-01-06**	VM-06C	Polyacetal roller
		VZM450-01-06S	VM-06CS	Hard steel roller
Manual operation	Toggle lever	**VZM450-01-08**	VM-08C	—
	Push button (Mushroom)	**VZM450-01-30R**	VM-30CR	Red
		VZM450-01-30B	VM-30CB	Black
		VZM450-01-30G	VM-30CG	Green
		VZM450-01-30Y	VM-30CY	Yellow
	Push button (Extended)	**VZM450-01-32R**	VM-32CR	Red
		VZM450-01-32B	VM-32CB	Black
		VZM450-01-32G	VM-32CG	Green
		VZM450-01-32Y	VM-32CY	Yellow
	Push button (Flush)	**VZM450-01-33**	VM-33C	With a set of red, black, green, yellow
	Twist selector (2 position)	**VZM450-01-34R**	VM-34CR	Red
		VZM450-01-34B	VM-34CB	Black
		VZM450-01-34G	VM-34CG	Green
		VZM450-01-34Y	VM-34CY	Yellow
	Key selector (2 position)	**VZM450-01-36**	VM-36C	—

Note 1) Actuator replacement is available for all types.
Note 2) For push button (mushroom), push button (extended), push button (flush) and a single unit of fastening ring, refer to pages 5-6-6 to 5-6-7. The other parts are not replaceable.
Note 3) The handle of the selector (2 position) cannot be removed or replaced alone.

How to Order

VZM45 0 – 01 – 01 S –

Body option

0	Internal pilot type
1	External pilot type

Port size

01	Rc 1/8
N01	NPT 1/8
F01	G 1/8

Actuator type

00	Basic
01	Roller lever
02	One Way Roller Lever
05	Straight plunger
06	Roller plunger
08	Toggle lever
30	Push button (Mushroom)
32	Push button (Extended)
33	Push button (Flush)
34	Twist selector (2 position)
36	Key selector (2 position)

Suffix for actuator

S	Hard steel roller	
R	Red	Color of push botton selector
B	Black	
G	Green	
Y	Yellow	

Option

F	Foot bracket (Only internal pilot)

Construction

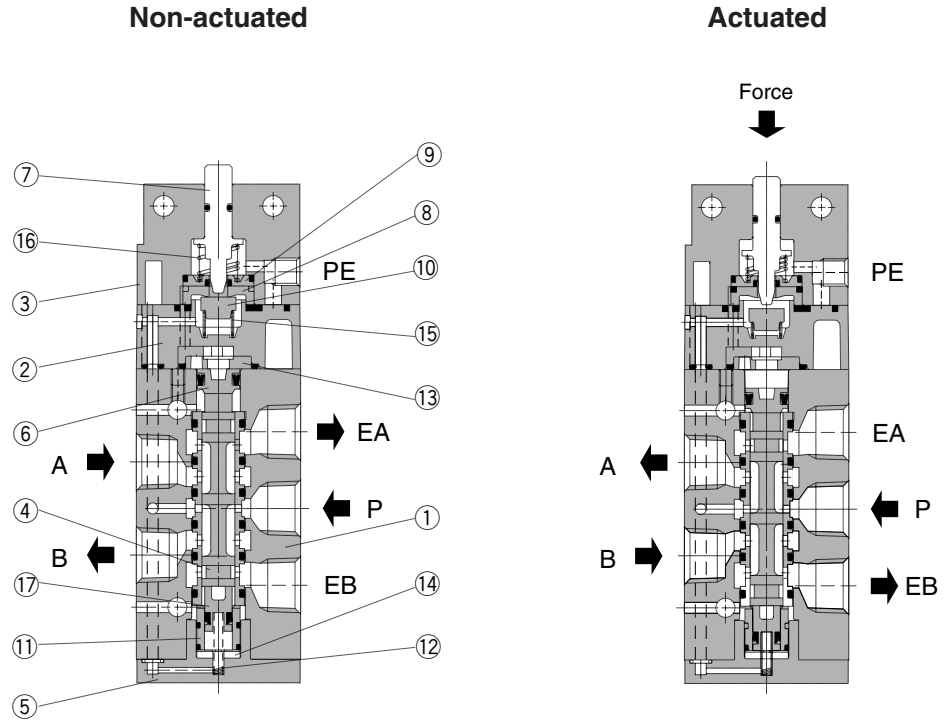

Component Parts

No.	Description	Material	Note
①	Body	ADC	Metallic plated
②	Pilot body	PBT	Metallic plated
③	Head cover	ZDC	Black zinc chromated
④	Spool/sleeve	Stainless steel	
⑤	End cover	POM	
⑥	Piston A	POM	
⑦	Plunger	POM	
⑧	Valve seat (A)	POM	
⑨	Valve seat (B)	POM	

No.	Description	Material	Note
⑩	Valve	NBR	
⑪	Piston guide B	Aluminum alloy	
⑫	Return spring	Stainless steel	
⑬	Cushion	Rubber	
⑭	Cushion	Rubber	
⑮	Valve spring	Stainless steel	
⑯	Return spring	Stainless steel	
⑰	Piston B	POM	

Series VZM400

Basic
VZM450-01-00

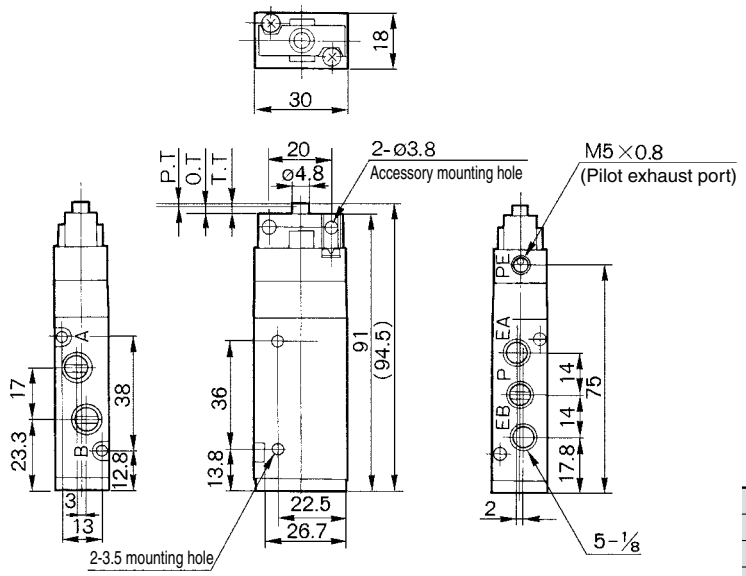

JIS Symbol

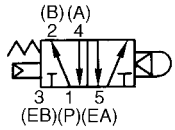

∗ 0.5 MPa supply

F.O.F. ∗	16 N
P.T.	1.0 mm
O.T.	2.0 mm
T.T.	3.0 mm

Roller lever
VZM450-01-01
VZM450-01-01S

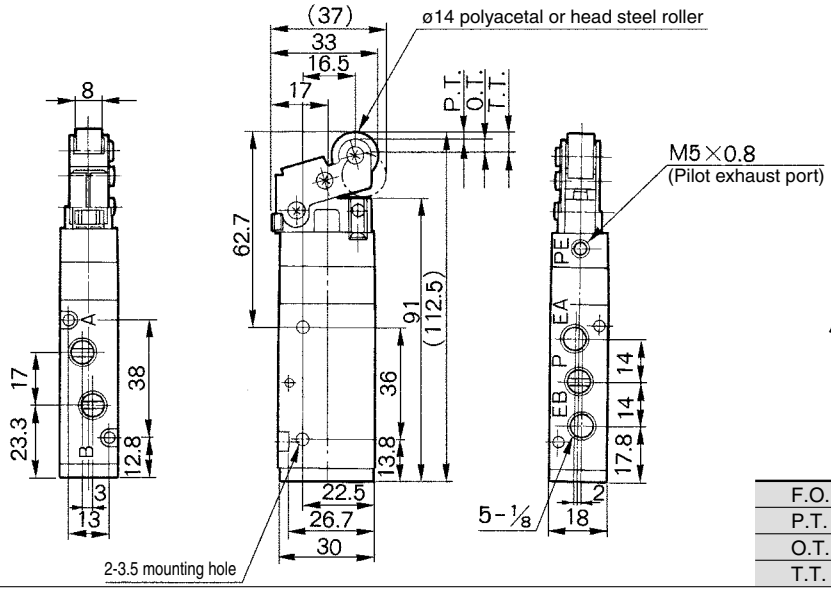

JIS Symbol

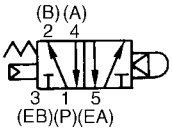

∗ 0.5 MPa supply

F.O.F. ∗	8 N
P.T.	2.2 mm
O.T.	4.0 mm
T.T.	6.2 mm

One way roller lever
VZM450-01-02
VZM450-01-02S

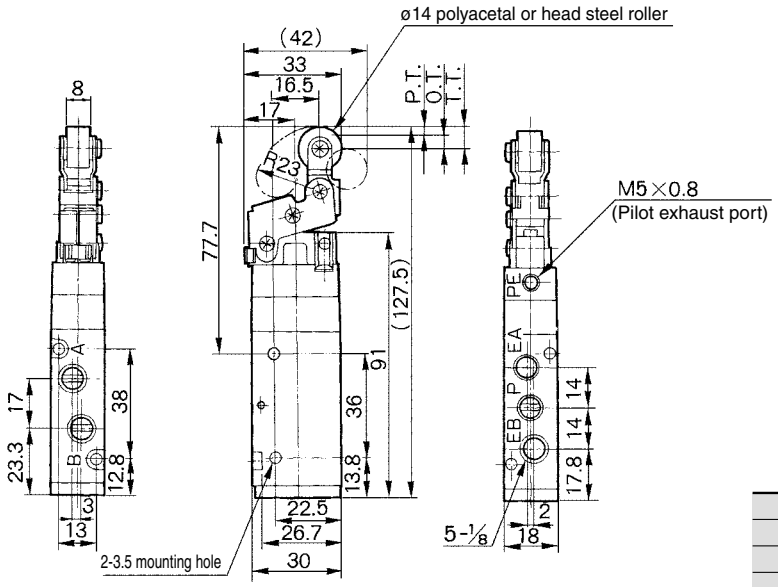

JIS Symbol

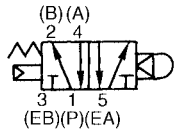

∗ 0.5 MPa supply

F.O.F. ∗	7 N
P.T.	2.4 mm
O.T.	4.6 mm
T.T.	7.0 mm

Series VZM400

Straight plunger
VZM450-01-05

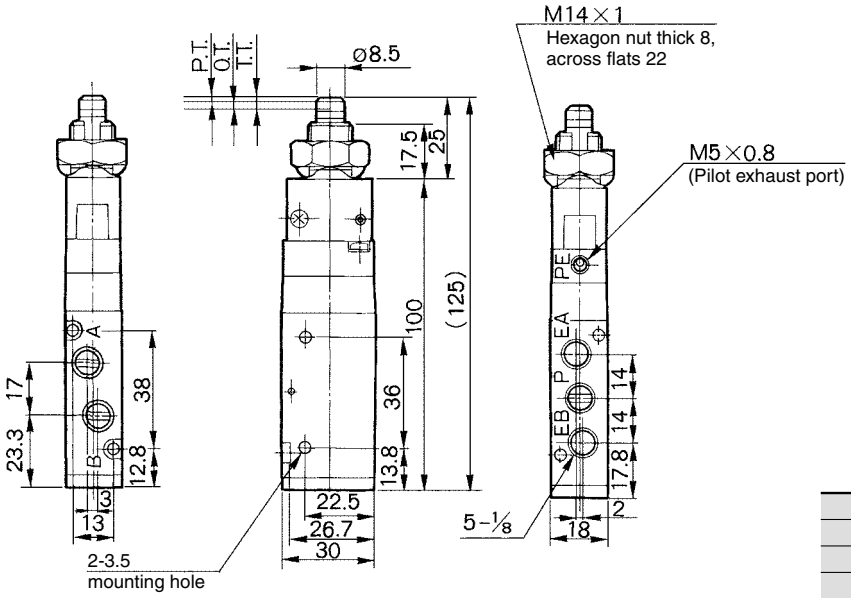

Panel mounting hole

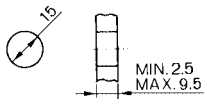

JIS Symbol

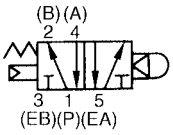

∗ 0.5 MPa supply

F.O.F. ∗	18 N
P.T.	1.5 mm
O.T.	2.0 mm
T.T.	3.5 mm

Roller plunger
VZM450-01-06
VZM450-01-06S

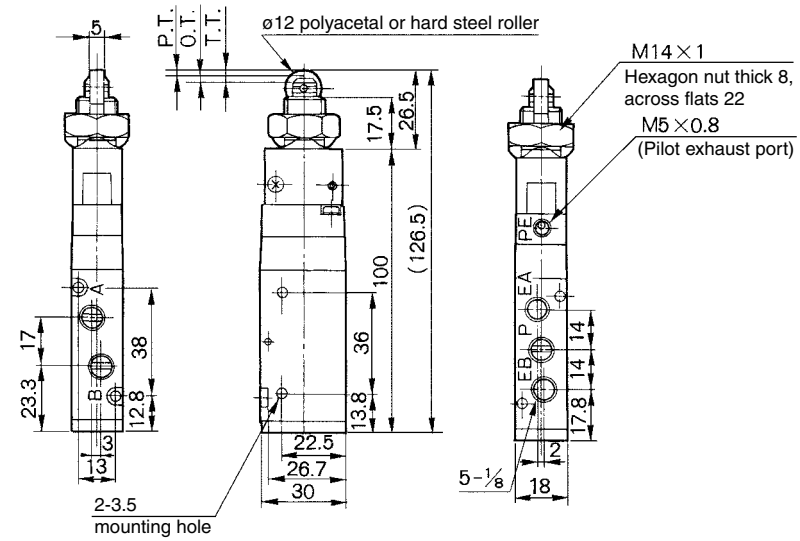

Panel mounting hole

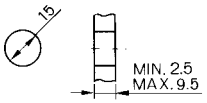

JIS Symbol

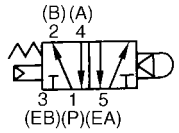

∗ 0.5 MPa supply

F.O.F. ∗	18 N
P.T.	1.5 mm
O.T.	2.0 mm
T.T.	3.5 mm

Toggle lever
VZM450-01-08

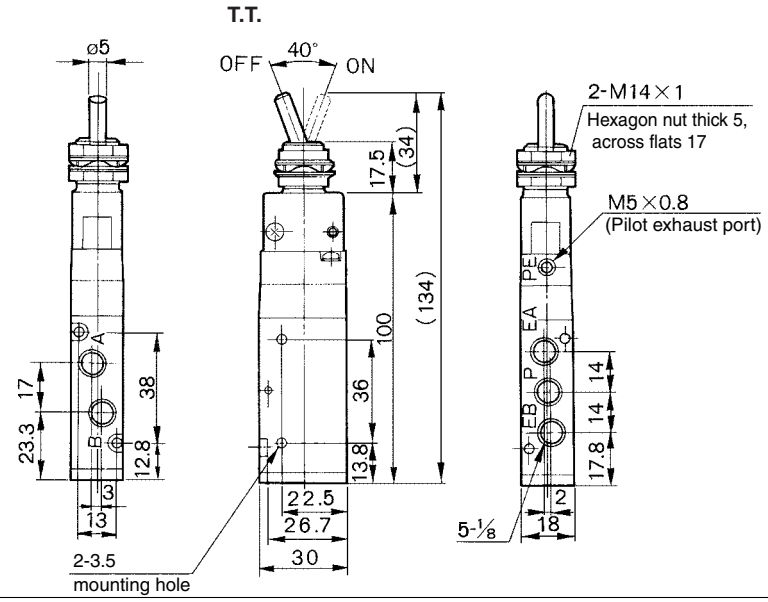

Panel mounting hole

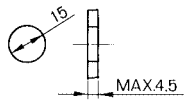

JIS Symbol

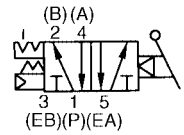

∗ 0.5 MPa supply

F.O.F. ∗	15 N
T.T.	40°

Series VZM400

Push button (Mushroom)
VZM450-01-30R/B/G/Y

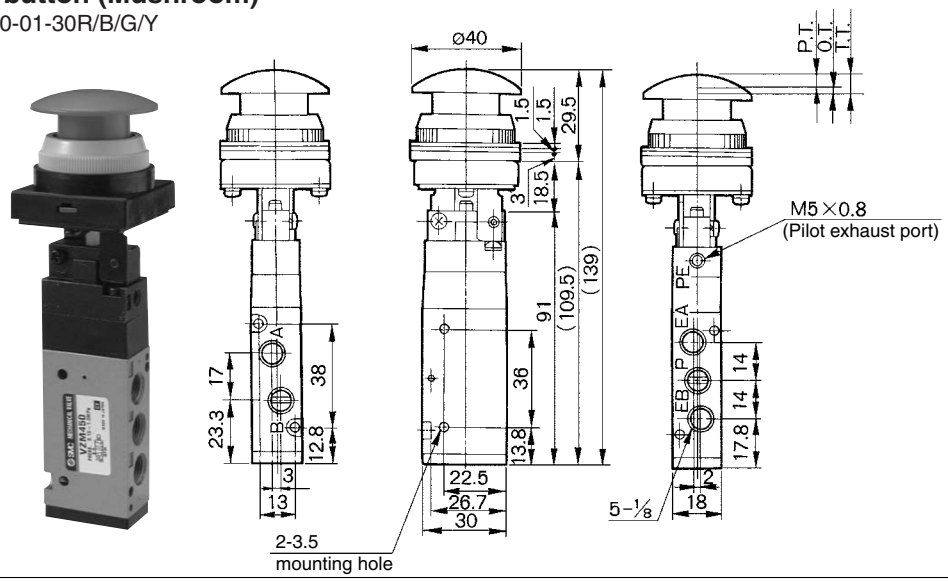

Panel mounting hole

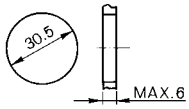

JIS Symbol

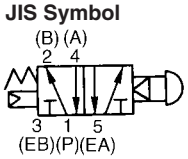

∗ 0.5 MPa supply

F.O.F. ∗	21 N
P.T.	4.8 mm
O.T.	1.7 mm
T.T.	6.5 mm

Push button (Extended)
VZM450-01-32R/B/G/Y

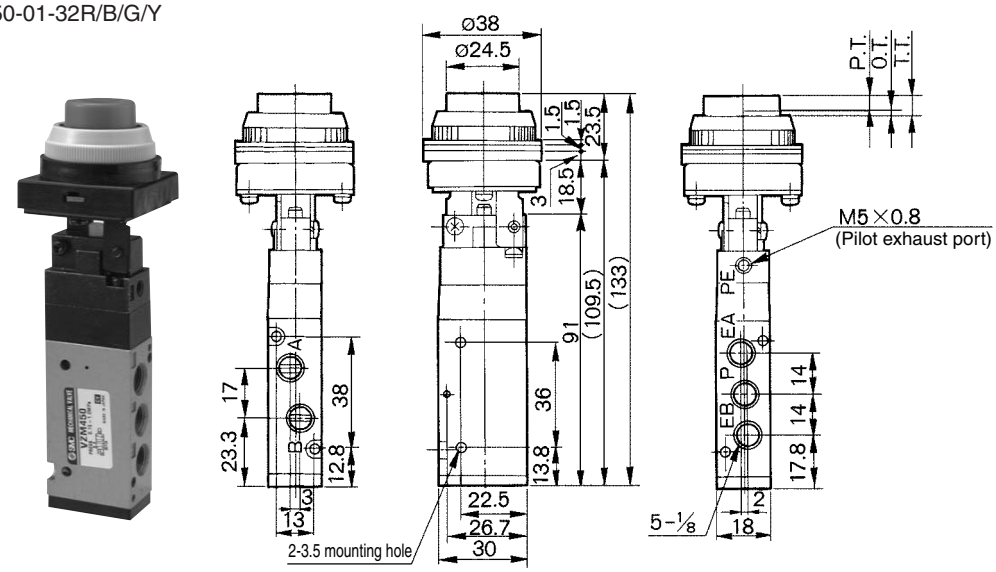

Panel mounting hole

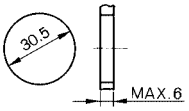

JIS Symbol

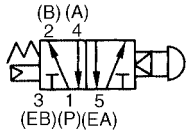

∗ 0.5 MPa supply

F.O.F. ∗	21 N
P.T.	4.8 mm
O.T.	1.7 mm
T.T.	6.5 mm

Push button (Flush)
VZM450-01-33

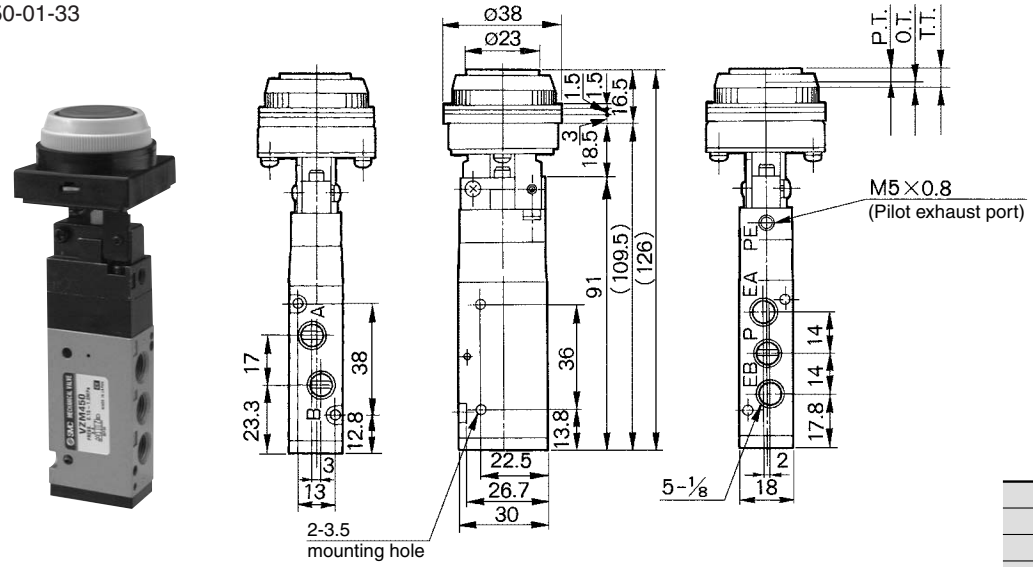

Panel mounting hole

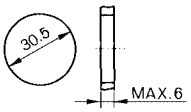

JIS Symbol

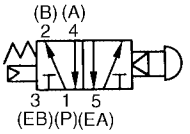

∗ 0.5 MPa supply

F.O.F. ∗	21 N
P.T.	4.8 mm
O.T.	1.7 mm
T.T.	6.5 mm

5 Port Mechanical Valve Series VZM400

Twist selector (2 position)
VZM450-01-34R/B/G/Y

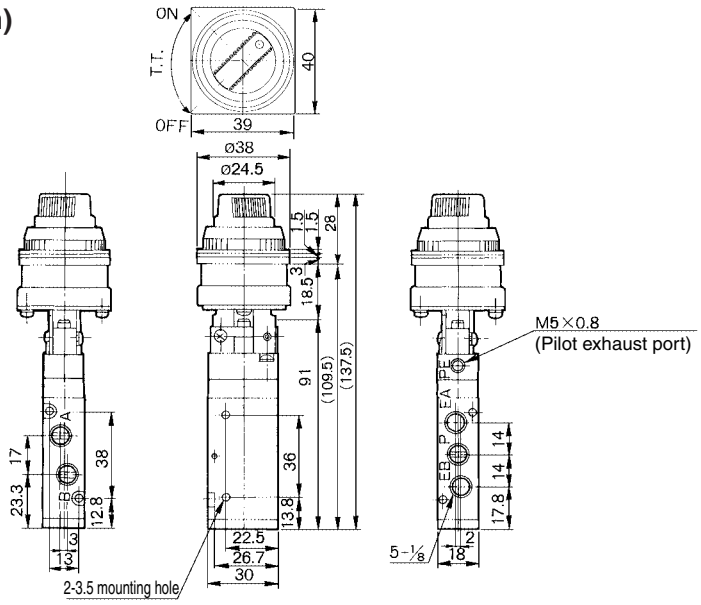

Panel mounting hole

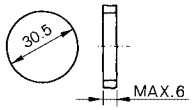

JIS Symbol

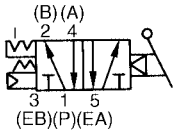

∗ 0.5 MPa supply

F.O.F. ∗	23 N
T.T.	90°

Key selector (2 position)
VZM450-01-36

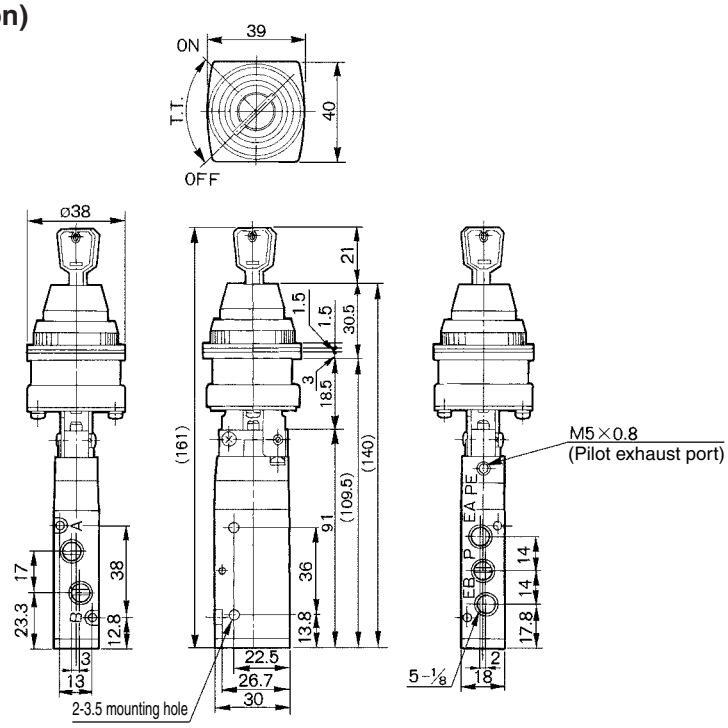

Key can be removed at the "on" and "off" positions.

Panel mounting hole

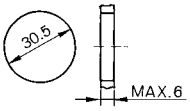

JIS Symbol

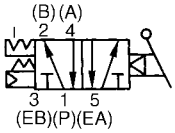

∗ 0.5 MPa supply

F.O.F. ∗	26 N
T.T.	90°

External pilot type
VZM451 type

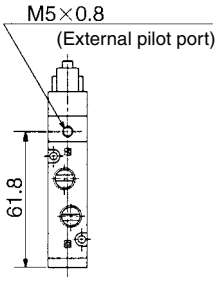

With foot bracket
VZM450-01-□□-F

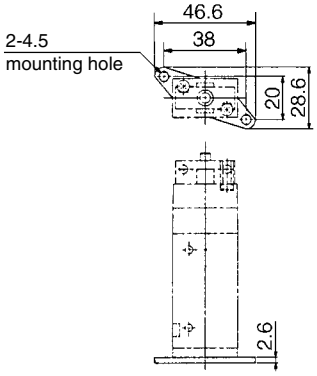

5 Port Mechanical Valve
Series VZM500

Compact design, large flow capacity 10.8 mm²

High cycle rate, long life/300 c.p.m. or less

Piping possible to any EXH port.

Proper countermeasures can be taken for applications in which the noise of the exhaust could cause problems to the surroundings.

External pilot model available. (Option)

Foot bracket and manifold mounting possible.

PAT. PEND.

Specifications

Fluid	Air/Inert gas
Operating pressure	0.15 to 0.7 MPa (1)
Ambient and fluid temperature	–5 to 60°C (No freezing)
Effective area	10.8 mm²
Maximum frequency (Mechanical operation type)	300 c.p.m. or less
Lubrication	Not required (Use turbine oil Class 1 ISO VG32, if lubricated.)
Port size	Main valve/Rc 1/8 (6A)
	Pilot valve (EXH)/M5 x 0.8
Option	Foot bracket (2)
Weight (Basic)	130 g

∗ Please contact SMC for manifold mounting style.
Note 1) External pilot type Main valve: 0 to 0.7 MPa
Pilot valve: 0.15 to 0.7 MPa
Note 2) The standard body can not be retrofitted with a foot bracket.

Model

	Actuator	Model	Actuator part no.	Application
Mechanical operation	Basic	**VZM550-01-00**	—	—
	Roller lever	**VZM550-01-01**	VM-01C	Polyacetal roller
		VZM550-01-01S	VM-01CS	Hard steel roller
	One way roller lever	**VZM550-01-02**	VM-02C	Polyacetal roller
		VZM550-01-02S	VM-02CS	Hard steel roller
	Straight plunger	**VZM550-01-05**	VM-05C	—
	Roller plunger	**VZM550-01-06**	VM-06C	Polyacetal roller
		VZM550-01-06S	VM-06CS	Hard steel roller
Manual operation	Toggle lever	**VZM550-01-08**	VM-08C	—
	Push button (Mushroom)	**VZM550-01-30R**	VM-30CR	Red
		VZM550-01-30B	VM-30CB	Black
		VZM550-01-30G	VM-30CG	Green
		VZM550-01-30Y	VM-30CY	Yellow
	Push button (Extended)	**VZM550-01-32R**	VM-32CR	Red
		VZM550-01-32B	VM-32CB	Black
		VZM550-01-32G	VM-32CG	Green
		VZM550-01-32Y	VM-32CY	Yellow
	Push button (Flush)	**VZM550-01-33**	VM-33C	With a set of red, black, green, yellow
	Twist selector (2 position)	**VZM550-01-34R**	VM-34CR	Red
		VZM550-01-34B	VM-34CB	Black
		VZM550-01-34G	VM-34CG	Green
		VZM550-01-34Y	VM-34CY	Yellow
	Key selector (2 position)	**VZM550-01-36**	VM-36C	—
	Push-pull	**VZM550-01-37**	—	Black

Note 1) Actuator replacement is available for all types. (Except push-pull)
Note 2) For push button (mushroom), push button (extended), push button (flush) and a single unit of fastening ring, refer to pages 5-6-6 to 5-6-7. The other parts are not replaceable.
Note 3) The handle of the selector (2 position) cannot be removed or replaced alone.

How to Order

VZM55 0 – 01 – 01 S –

Body option

0	Standard
1 *	External pilot type

* Except VZM550-01-37

Port size

01	Rc 1/8
N01	NPT 1/8
F01	G 1/8

Actuator type

00	Basic
01	Roller lever
02	One way roller lever
05	Straight plunger
06	Roller plunger
08	Toggle lever
30	Push button (Mushroom)
32	Push button (Extended)
33	Push button (Flush)
34	Twist selector (2 position)
36	Key selector (2 position)
37	Push-pull

Suffix for actuator

S	Hard steel roller	
R	Red	Color of push button selector
B	Black	
G	Green	
Y	Yellow	

Option

F	Foot bracket

Construction

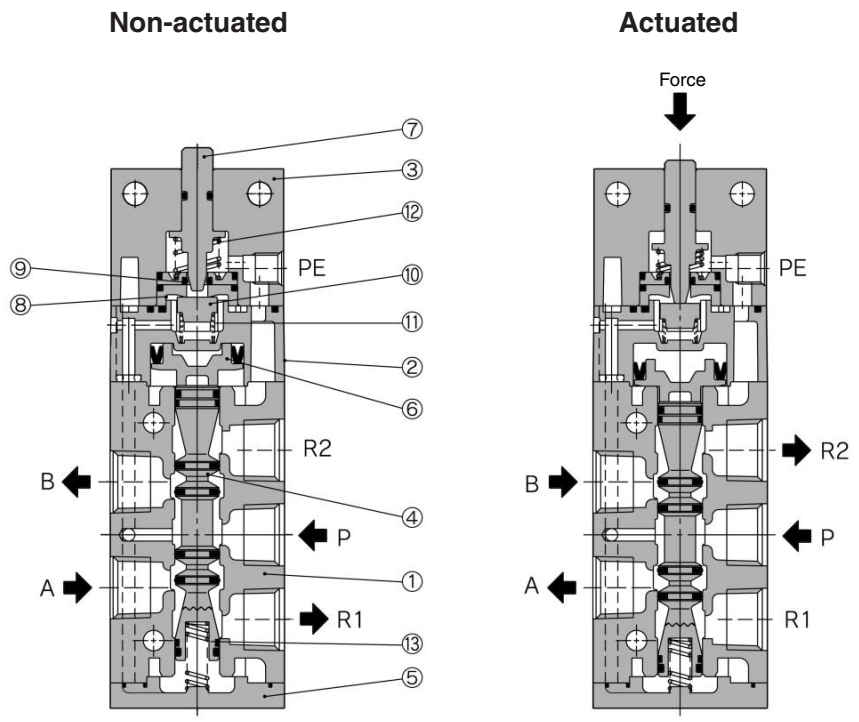

Component Parts

No.	Description	Material	Note
①	Body	ADC	Metallic plated
②	Pilot body	PBT	ZDC only for external pilot
③	Head cover	ZDC	Black zinc chromated
④	Spool valve assembly		
⑤	End cover	ZDC	Metallic plated
⑥	Piston	POM	
⑦	Plunger	POM	

No.	Description	Material	Note
⑧	Valve seat (A)	POM	
⑨	Valve seat (B)	POM	
⑩	Valve assembly	NBR	
⑪	Valve spring	Stainless steel	
⑫	Return spring	Stainless steel	
⑬	Spool spring	Stainless steel	

Series VZM500

Basic
VZM550-01-00

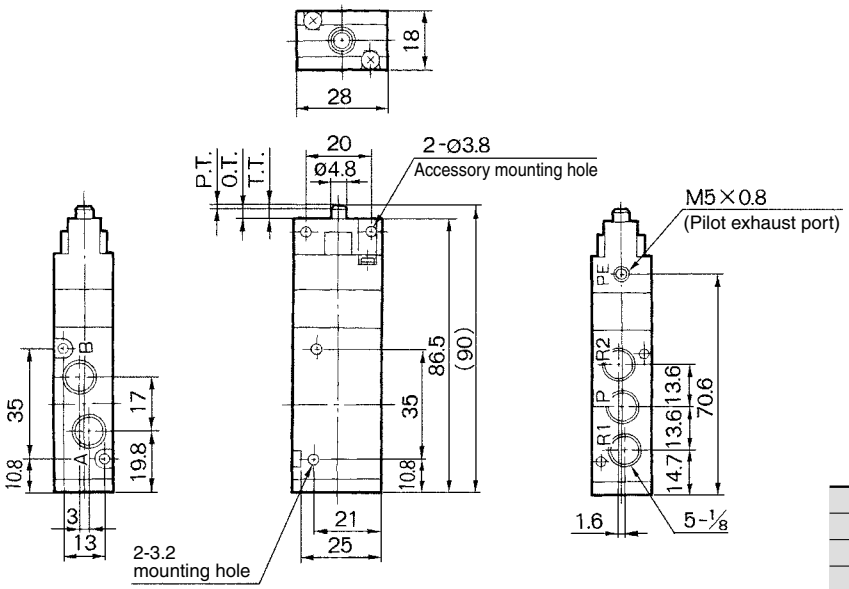

JIS Symbol

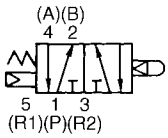

∗ 0.5 MPa supply

F.O.F. ∗	16 N
P.T.	1.0 mm
O.T.	2.0 mm
T.T.	3.0 mm

Roller lever
VZM550-01-01
VZM550-01-01S

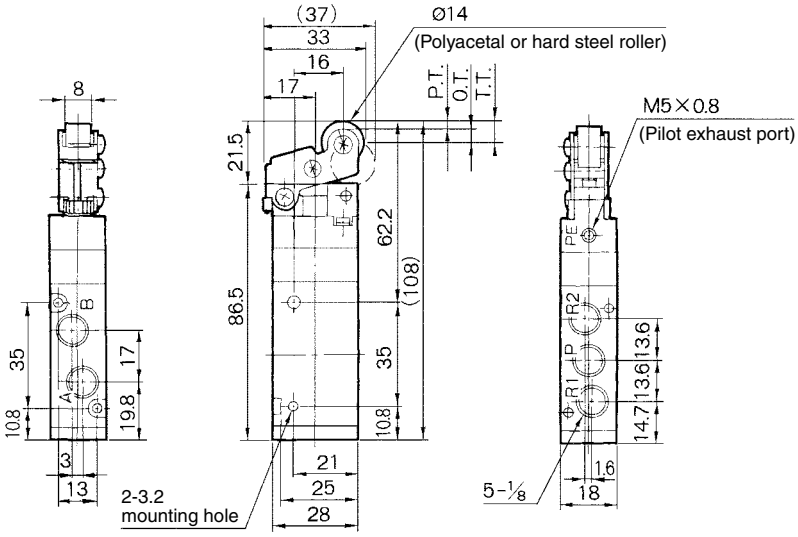

JIS Symbol

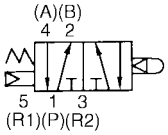

∗ 0.5 MPa supply

F.O.F. ∗	8 N
P.T.	2.2 mm
O.T.	4.0 mm
T.T.	6.2 mm

One way roller lever
VZM550-01-02
VZM550-01-02S

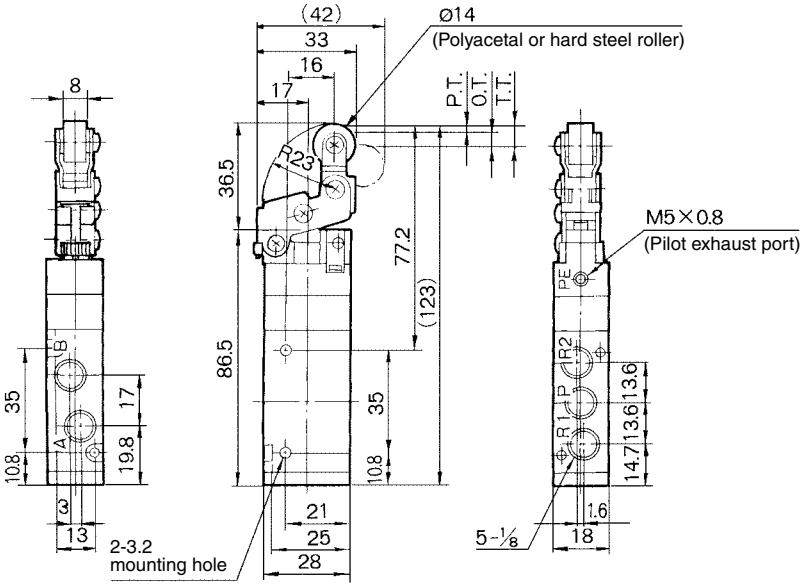

JIS Symbol

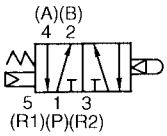

∗ 0.5 MPa supply

F.O.F. ∗	7 N
P.T.	2.4 mm
O.T.	4.6 mm
T.T.	7.0 mm

Series VZM500

Straight plunger
VZM550-01-05

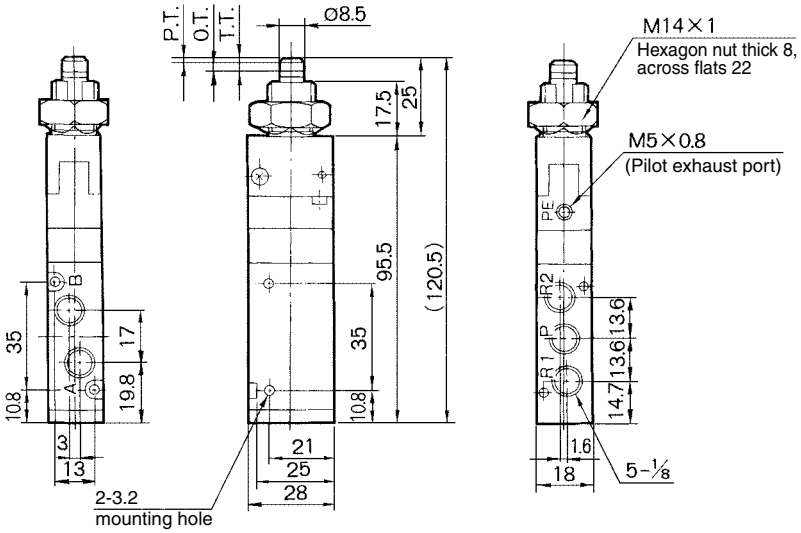

Panel mounting hole

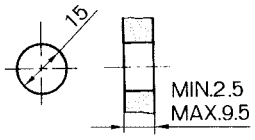

JIS Symbol

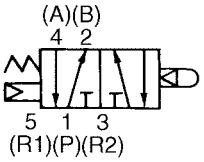

∗ 0.5 MPa supply

F.O.F. ∗	18 N
P.T.	1.5 mm
O.T.	2.0 mm
T.T.	3.5 mm

Roller plunger
VZM550-01-06
VZM550-01-06S

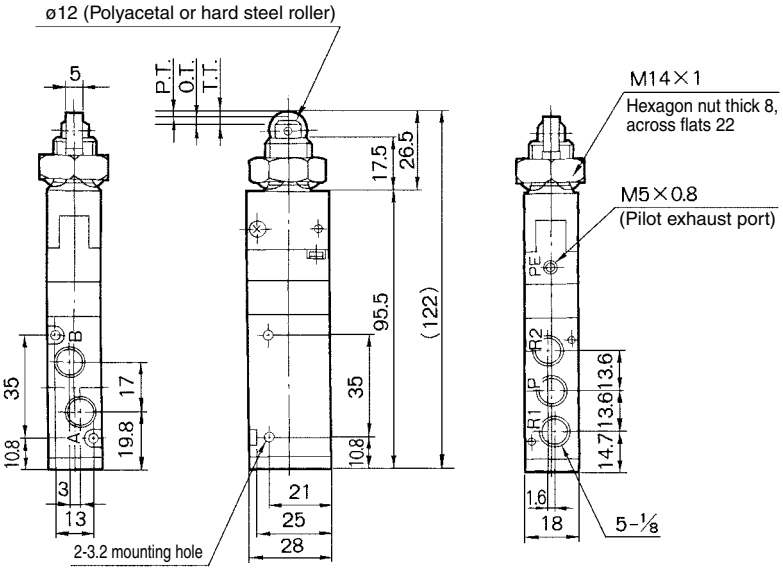

Panel mounting hole

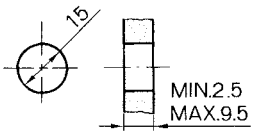

JIS Symbol

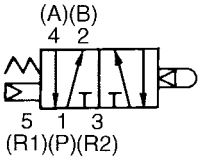

∗ 0.5 MPa supply

F.O.F. ∗	18 N
P.T.	1.5 mm
O.T.	2.0 mm
T.T.	3.5 mm

Toggle lever
VZM550-01-08

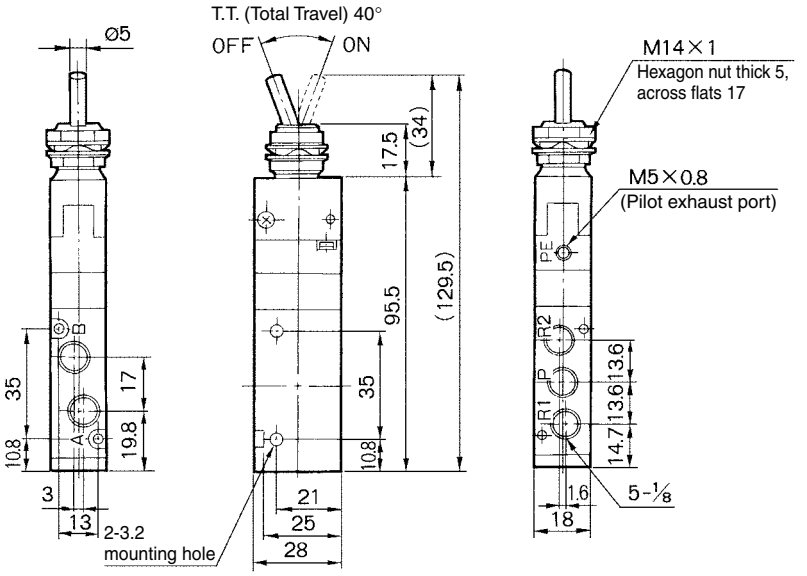

Panel mounting hole

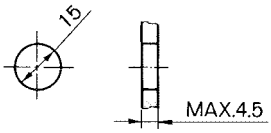

JIS Symbol

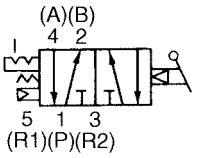

∗ 0.5 MPa supply

F.O.F. ∗	15 N
T.T.	40°

Series VZM500

Push button (Mushroom)
VZM550-01-30R/B/G/Y

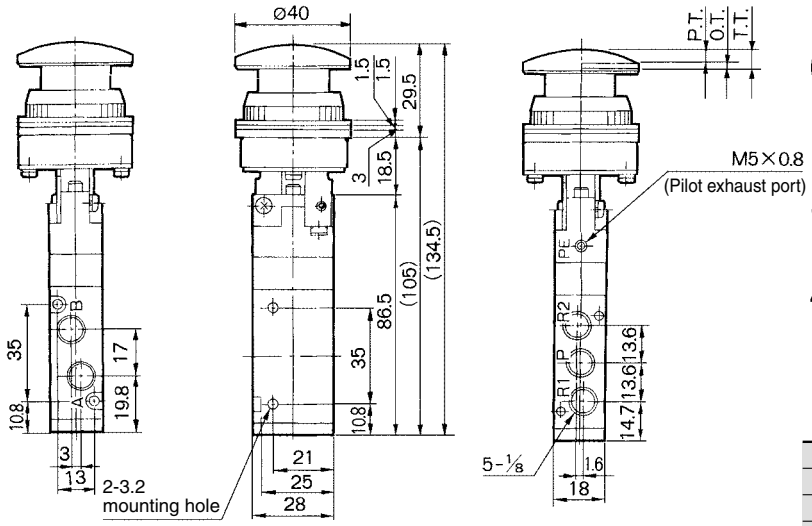

Panel mounting hole

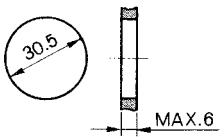

JIS symbol

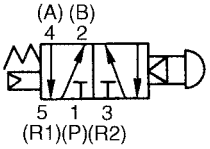

∗ 0.5 MPa supply

F.O.F. ∗	21 N
P.T.	4.8 mm
O.T.	1.7 mm
T.T.	6.5 mm

Push button (Extended)
VZM550-01-32R/B/G/Y

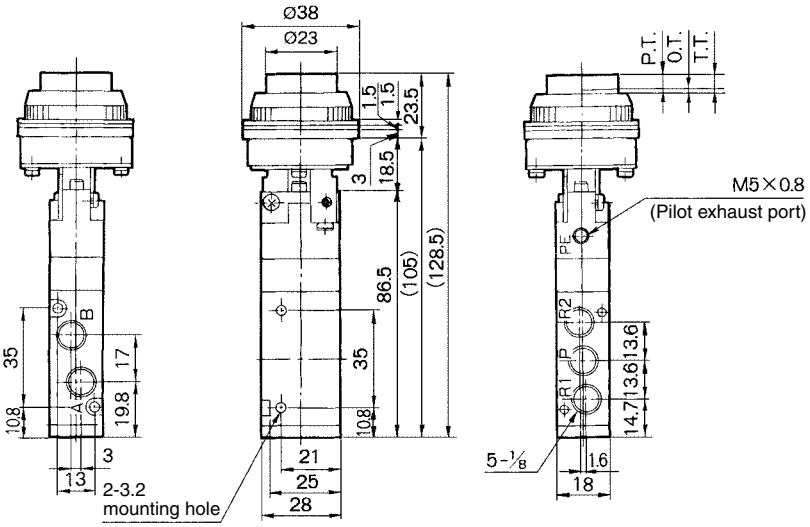

Panel mounting hole

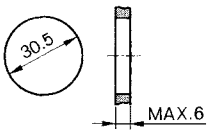

JIS symbol

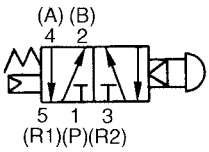

∗ 0.5 MPa supply

F.O.F. ∗	21 N
P.T.	4.8 mm
O.T.	1.7 mm
T.T.	6.5 mm

Push button (Flush)
VZM550-01-33

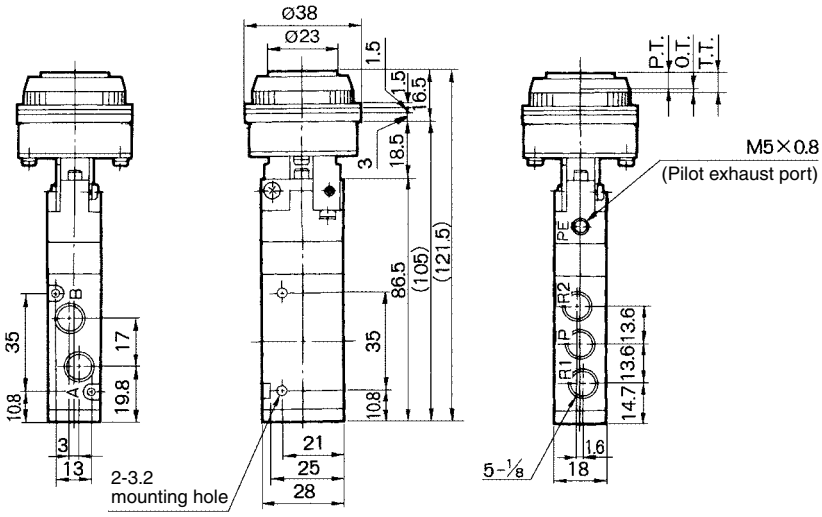

Panel mounting hole

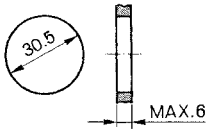

JIS symbol

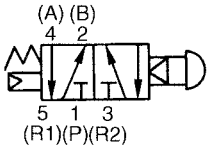

∗ 0.5 MPa supply

F.O.F. ∗	21 N
P.T.	4.8 mm
O.T.	1.7 mm
T.T.	6.5 mm

Series VZM500

Selector (2 position)
VZM550-01-34R/B/G/Y

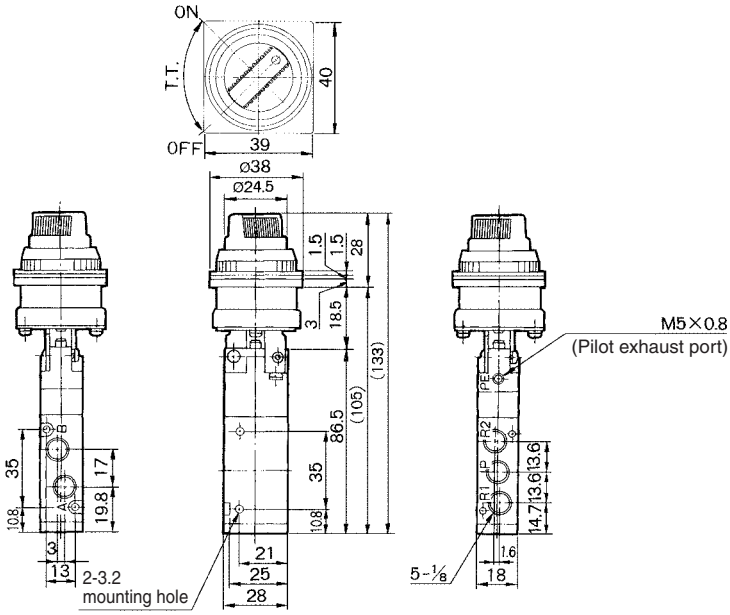

Panel mounting hole

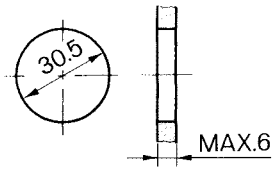

JIS Symbol

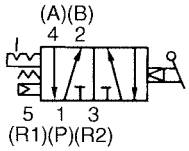

∗ 0.5 MPa supply

F.O.F. ∗	23 N
T.T.	90°

Key selector (2 position)
VZM550-01-36

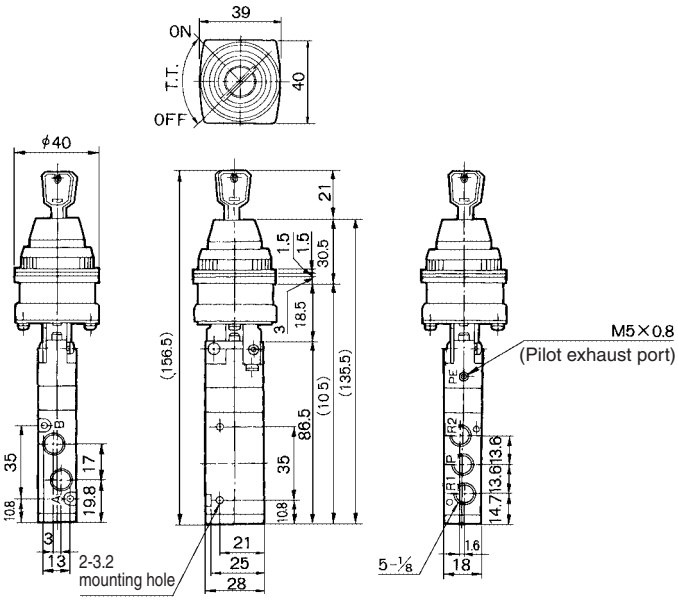

Key can be removed at the "on" and "off" positions.

Panel mounting hole

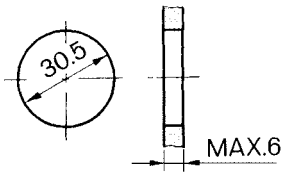

JIS Symbol

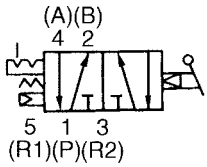

∗ 0.5 MPa supply

F.O.F. ∗	26 N
T.T.	90°

Push pull
VZM550-01-37

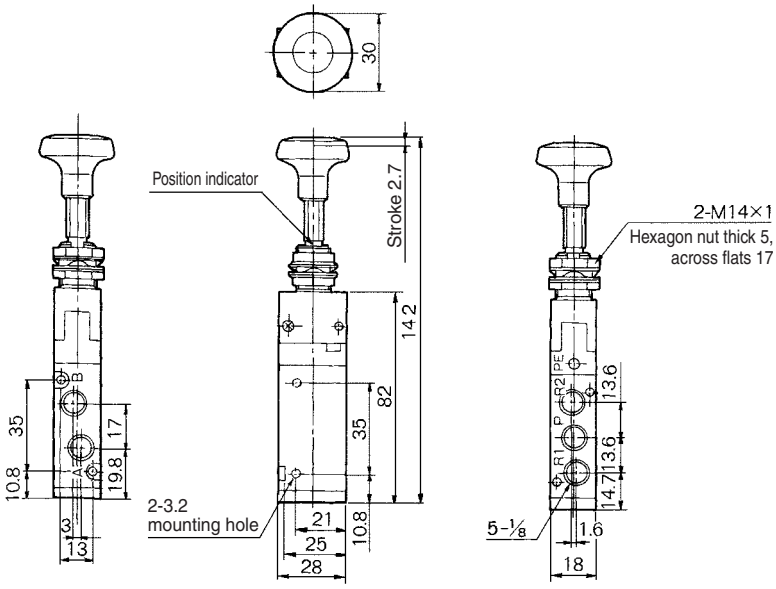

Panel mounting hole

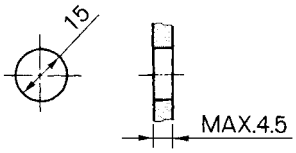

JIS Symbol

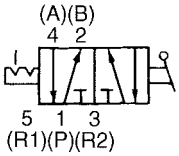

F.O.F.	20 N
T.T.	2.7 mm

External pilot type
VZM551 type

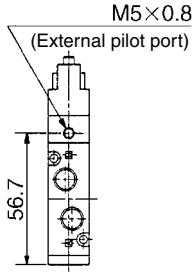
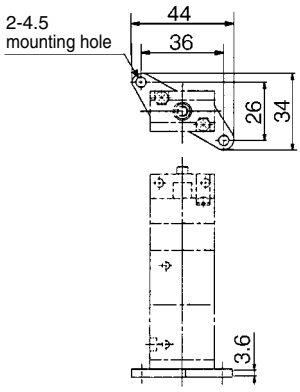
With foot bracket
VZM55□-01-□□-F