Speed Controller with Compact Indicator

New

RoHS

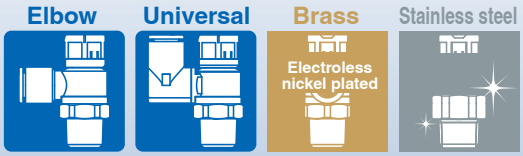

Height Max. 5.5 mm shorter

Actual size

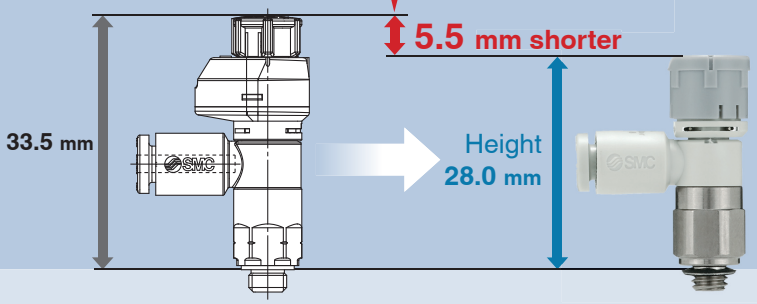

AS12□1FS□-M5□-04

AS12□1FS-M5□-04A

Better visibility

Check from 360° directions is possible. Inspection and maintenance works are facilitated.

Flow rate can be controlled numerically with the indicator window.

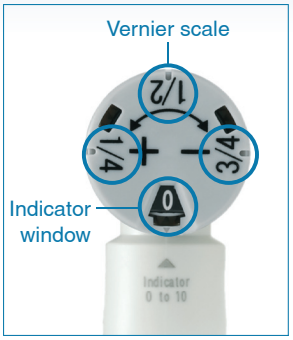

Indicator window	Vernier scale
0	1/4
	1/2
	3/4
⋮	⋮
10*1	1/4
	1/2
	3/4

*1 Body size 1 makes 8 rotations.

- Due to the vernier indication, it is possible to configure fine settings in 1/4 increments.
  - · 32 divisions (Body size 1)
  - · 40 divisions (Body size 2/3/4)
- Reduces work-hours and setting mistakes

*2 For the elbow type (The number of reference points differs depending on the size. For details, refer to page 32.)

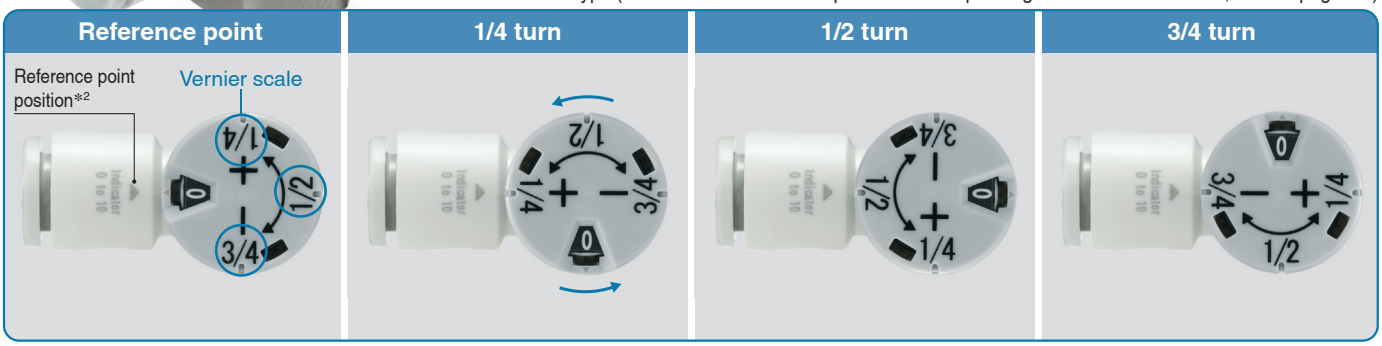

AS-FSA Series

SMC

CAT.EUS20-280A-UK

Series Variations

	Seal method	Body size	Port size		Applicable tubing O.D. Metric size 2	3.2	4	6	8	10	12	16	Inch size 1/8"	5/32"	1/4"	5/16"	3/8"	1/2"	Metal parts material	Max. number of rotations	Applicable tubing material
	Gasket seal	1	M5 x 0.8		∗1	●	●	●					●	●	●				• Brass/ Steel wire • Stainless steel	8	Nylon (T, TIA series) Soft nylon (TS, TISA series) Polyurethane (T, TIUB series) Fluoropolymer (TLM, TILM series) (TH, TIH series)
			10-32UNF		∗1	●	●	●					●	●	●						
	Sealant	2	R NPT	1/8		●	●	●	●	∗1			●	●	●	●				10	
				1/4		∗1	●	●	●	●			∗1	●	●	●	●				
		3		1/4				●	●	●	●				●	●	●				
				3/8				●	●	●	●				●	●	●				
		4		1/2						●	●	∗1					●	●			
	Face seal	2	G	1/8		●	●	●	●	∗1											
				1/4		∗1	●	●	●	●											
		3		1/4				●	●	●	●										
				3/8				●	●	●	●										
		4		1/2						●	●	∗1									

∗1 The universal type is not available.

Easy identification of Product type

	Series	Release button colour: Meter-out	Meter-in	Metric	Inch
Brass	AS-FSA Series	Grey	Light blue	Light grey	Orange
Stainless steel	AS-FSGA Series	Grey	Light blue	White	White

Speed Controller with Compact Indicator
Elbow Type/Universal Type
AS-FSA Series

RoHS

Model

Model	Port size		Seal method	Applicable tubing O.D. Metric size 2*2	3.2	4	6	8	10	12	16	Inch size 1/8"	5/32"	1/4"	5/16"	3/8"	1/2"	*3 Max. number of rotations
AS1□□1FS-M5□A	M5 x 0.8		Gasket seal	●*4	●	●	●					●	●	●				8
AS1□□1FS-U10/32□A	10-32UNF		Gasket seal	●*4	●	●	●					●	●	●				8
AS2□□1FS-□01A	R NPT	1/8	Sealant*1		●	●	●	●	●*4			●	●	●	●			10
AS2□□1FS-□02A	R NPT	1/4	Sealant*1		●*4	●	●	●	●			●*4	●	●	●	●		10
AS3□□1FS-□02A	R NPT	1/4	Sealant*1				●	●	●	●				●	●	●		10
AS3□□1FS-□03A	R NPT	3/8	Sealant*1				●	●	●	●				●	●	●		10
AS4□□1FS-□04A	R NPT	1/2	Sealant*1						●	●	●*4					●	●	10
AS2□□1FS-G01A	G	1/8	Face seal		●	●	●	●	●*4									10
AS2□□1FS-G02A	G	1/4	Face seal		●*4	●	●	●	●									10
AS3□□1FS-G02A	G	1/4	Face seal				●	●	●	●								10
AS3□□1FS-G03A	G	3/8	Face seal				●	●	●	●								10
AS4□□1FS-G04A	G	1/2	Face seal						●	●	●*4							10

*1 "Without sealant" type can be selected as a standard option.
*2 Only polyurethane tubing is applicable for Ø 2.
*3 There are differences in actual rate as by the indicator window over the maximum number of rotations depending on the individual product.
*4 The universal type is not available.

Flow Direction Symbols on Body

	Meter-out	Meter-in
Symbol		

Specifications

Fluid	Air
Proof pressure	1.5 MPa
Max. operating pressure	1 MPa
Min. operating pressure	0.1 MPa
Ambient and fluid temperatures	-5 to 60 °C (No freezing)
Applicable tubing material	Nylon, Soft nylon, Polyurethane*1, FEP, PFA

*1 Use caution at the max. operating pressure when using soft nylon or polyurethane tubing. (Refer to the for details.)

Flow Rate and Sonic Conductance

Model		AS1□□1FS-M5□A		AS2□□1FS-01A			AS2□□1FS-02A				AS3□□1FS-A			AS4□□1FSA	
Tubing O.D.	Metric size	Ø 2	Ø 3.2 Ø 4 Ø 6	Ø 3.2	Ø 4	Ø 6 Ø 8 Ø 10	Ø 3.2	Ø 4	Ø 6	Ø 8 Ø 10	Ø 6	Ø 8	Ø 10 Ø 12	Ø 10	Ø 12 Ø 16
	Inch size	—	Ø 1/8" Ø 1/4" Ø 5/32"	Ø 1/8"	Ø 5/32"	Ø 1/4" Ø 5/16"	Ø 1/8"	Ø 5/32"	—	Ø 1/4" Ø 5/16" Ø 3/8"	Ø 1/4"	Ø 5/16"	Ø 3/8"	Ø 3/8"	Ø 1/2"
C values: Sonic conductance dm³/(s·bar)	Free flow	0.2	0.3	0.4	0.6	0.6	0.7	1.0	1.3	1.5	1.6	1.7	2.5	4.4	4.8
	Controlled flow	0.2	0.3	0.4	0.7	0.8	0.6	0.9	1.3		2.1	2.4	3.3	4.4	4.9
b values: Critical pressure ratio	Free flow	0.3	0.4	0.2		0.3	0.3		0.4		0.4		0.3	0.3	
	Controlled flow	0.2		0.2		0.3	0.3				0.3			0.3	
Q [l/min(ANR)]*1	Free flow	51	82	96	144	153	178	254	354	408	435	462	636	1119	1220
	Controlled flow	48	72	96	168	203	153	229	331	331	534	610	839	1119	1246

* 10-32UNF has the same specification as M5.
* C and b values are for controlled flow with the needle fully open and free flow with the needle fully closed.
*1 These values have been calculated according to ISO 6358 and indicate the flow rate under standard conditions with an inlet pressure of 0.6 MPa

⚠ Caution

Be sure to read this before handling the products.
Refer to the back cover for safety instructions. For flow control equipment precautions, refer to the "Handling Precautions for SMC Products" and the "Operation Manual" on the SMC website: https://www.smc.eu

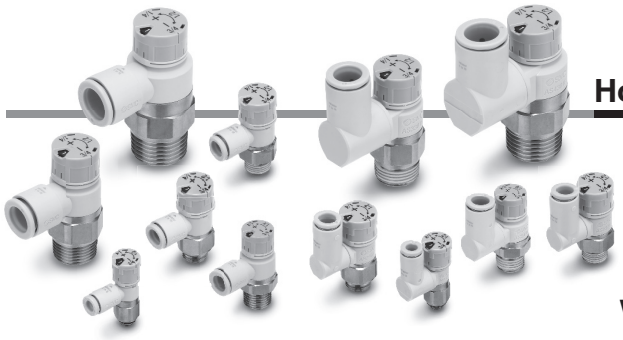

How to Order

Applicable tubing O.D.*1

Metric size		Inch size	
02	Ø 2	01	Ø 1/8"
23	Ø 3.2*2	03	Ø 5/32"
04	Ø 4	07	Ø 1/4"
06	Ø 6		

*1 For selecting applicable tubing O.D., refer to the "Model" on page 2.
Metric size and inch size types can be visually identified by the colour of the release button.
Metric size: Light grey
Inch size: Orange
*2 Use Ø 1/8" tubing.

Width across flats (H)

E	8 mm
—	9 mm

Body size

1	M5 x 0.8 10-32UNF

Port size

M5	M5 x 0.8
U10/32	10-32UNF

Body Size 1 AS 1 2 0 1F S- M5 E - 06 A - ☐

Body Size 2/3/4 AS 2 2 0 1F S- ☐ 01 - 06 S A - ☐

Made to order
Refer to page 15 for details.

With compact indicator

Seal method

—	Without sealant
S	With sealant

* Face seal type is used for the G thread type. Select "—/Without sealant."
Example) AS2201FS-G01-06A

Applicable tubing O.D.*1

Metric size		Inch size*3	
23	Ø 3.2*2	01	Ø 1/8"
04	Ø 4	03	Ø 5/32"
06	Ø 6	07	Ø 1/4"
08	Ø 8	09	Ø 5/16"
10	Ø 10	11	Ø 3/8"
12	Ø 12	13	Ø 1/2"
16	Ø 16		

*1 For selecting applicable tubing O.D., refer to the "Model" on page 2.
*2 Use Ø 1/8" tubing.
*3 Only the metric size is available for the G thread type.

With indicator

Body size

2	1/8, 1/4
3	3/8
4	1/2

Type

2	Elbow
3	Universal

Control type*1

0	Meter-out
1	Meter-in

*1 Meter-out and meter-in types can be visually identified by the colour of the knob.
Meter-out: Grey
Meter-in: Light blue

Thread type

—	R
N	NPT
G	G

Port size

01	1/8
02	1/4
03	3/8
04	1/2

Made to Order
(For details, refer to page 15.)

Symbol	Specifications
-X12	Lubricant: Vaseline
-X21	Grease-free (Seal: Fluorine-coated) + Restrictor (Without check valve)
-X214	Restrictor (Without check valve)
10-	Clean series

Needle Valve: Flow Rate Characteristics

AS1□01FS-M5□A, AS1□11FS-M5□A

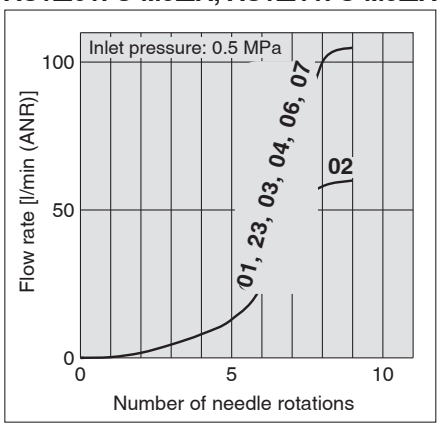

AS2□01FS-01A, AS2□11FS-01A

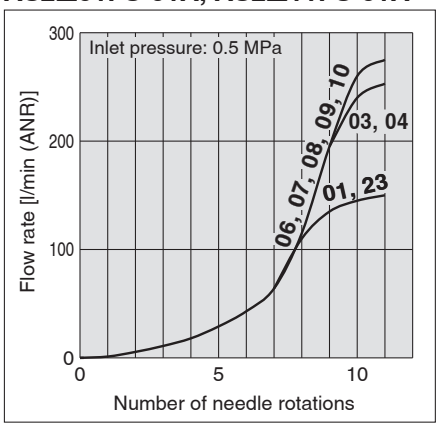

AS2□01FS-02A, AS2□11FS-02A

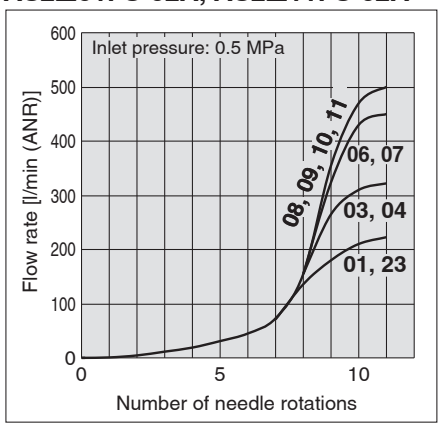

∗ -U10/32 has the same specification as M5.

AS3□01FS□A, AS3□11FS□A

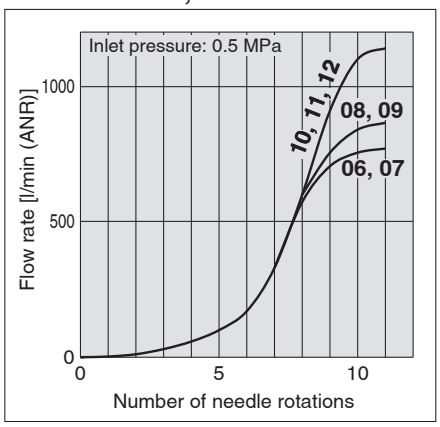

AS4□01FS□A, AS4□11FS□A

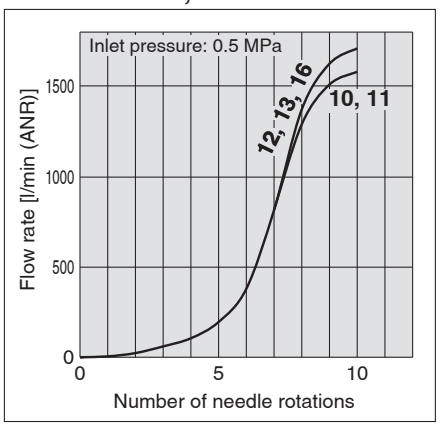

∗ The numbers above the flow rate characteristic curves in the charts show the applicable tubing outside diameter as defined by the product number.

Construction: Elbow Type

Seal method: Gasket seal
For M5, 10-32UNF

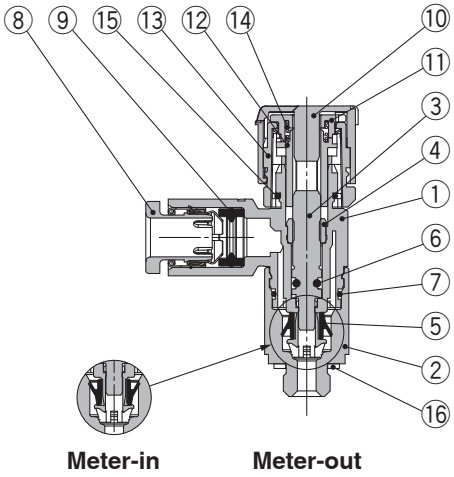

Seal method: Sealant
For R, NPT thread

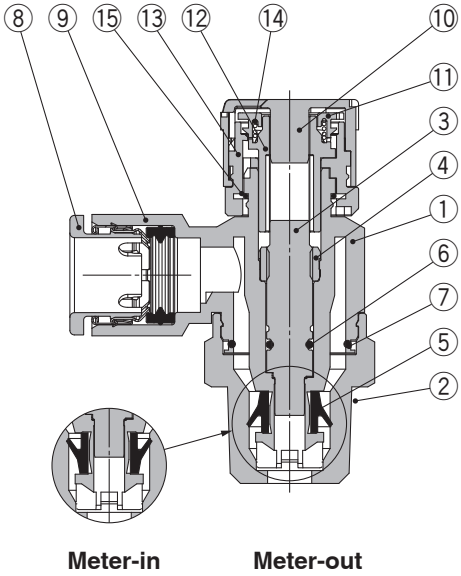

Seal method: Face seal
For G thread

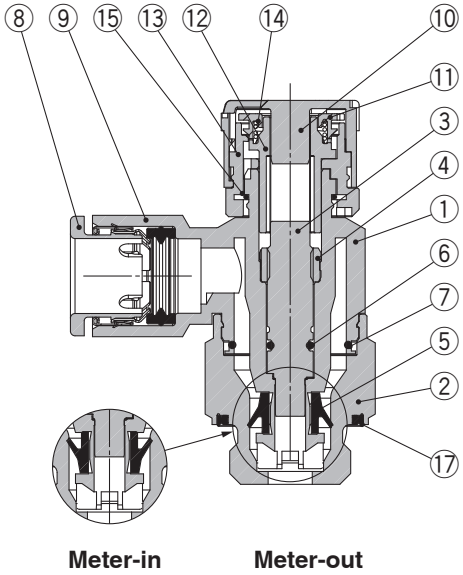

Component Parts

No.	Description	Material	Note
1	**Body A**	PBT	
2	**Body B**	Brass	Electroless nickel plating
3	**Needle**	PBT	
4	**Needle guide**	Brass	Electroless nickel plating
5	**U-seal**	HNBR	
6	**O-ring**	NBR	
7	**O-ring**	NBR	
8	**Cassette**	—	
9	**Seal**	NBR	
10	**Knob**	POM	
11	**Indicator gear**	POM	
12	**Shaft**	POM	
13	**Spacer**	PBT	
14	**Spring**	Stainless steel	
15	**Clip**	Stainless steel	
16	**Gasket**	NBR/Stainless steel	
17	**Seal**	NBR	

Construction: Universal Type

Seal method: Gasket seal
For M5, 10-32UNF

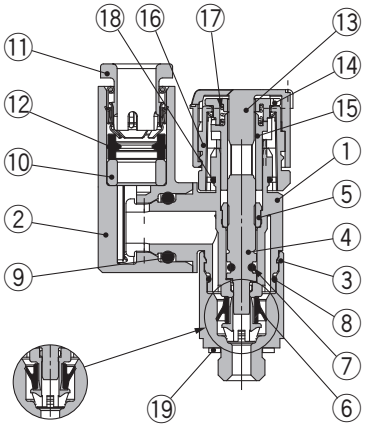

Meter-in Meter-out

Seal method: Face seal
For G thread

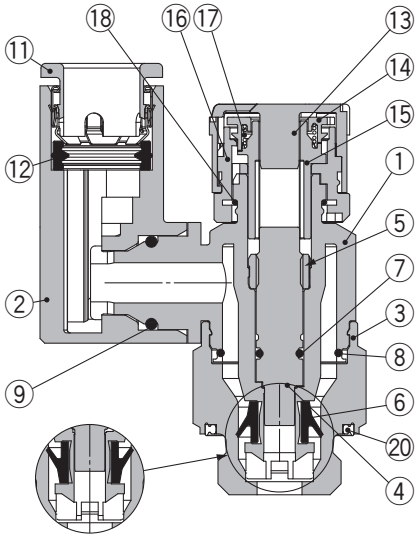

Meter-in Meter-out

Seal method: Sealant
For R, NPT thread

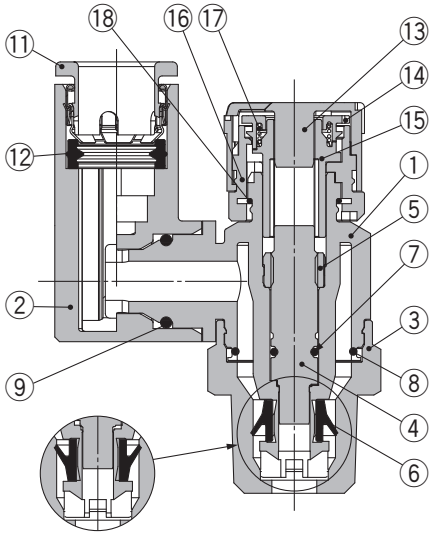

Meter-in Meter-out

Component Parts

No.	Description	Material	Note
1	**Body A**	PBT	
2	**Elbow body**	PBT	
3	**Body B**	Brass	Electroless nickel plating
4	**Needle**	PBT	
5	**Needle guide**	Brass	Electroless nickel plating
6	**U-seal**	HNBR	
7	**O-ring**	NBR	
8	**O-ring**	NBR	
9	**O-ring**	NBR	
10	**Spacer**	PBT	Only for Ø 3.2, Ø 1/8", Ø 4, Ø 5/32", and Ø 6
11	**Cassette**	—	
12	**Seal**	NBR	
13	**Knob**	POM	
14	**Indicator gear**	POM	
15	**Shaft**	POM	
16	**Spacer**	PBT	
17	**Spring**	Stainless steel	
18	**Clip**	Stainless steel	
19	**Gasket**	NBR/Stainless steel	
20	**Seal**	NBR	

Dimensions: Elbow Type

Seal method: Gasket seal
For M5, 10-32UNF

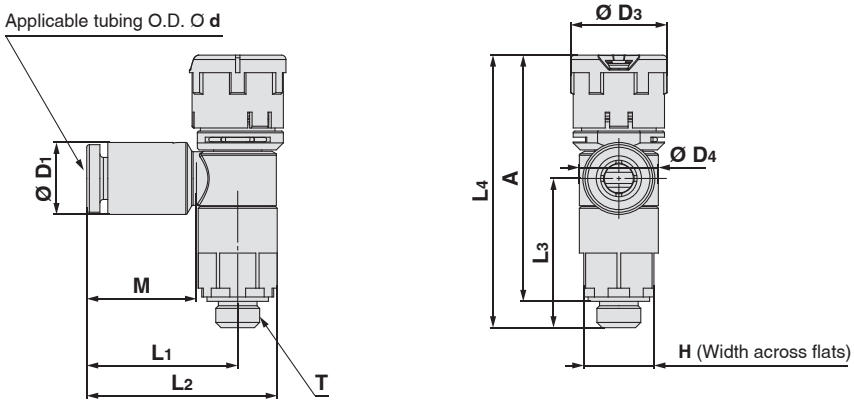

Metric Size

[mm]

Model	d	T	H	D_1	D_3	D_4	L_1	L_2	L_3	L_4*1 Unlocked	L_4*1 Locked	A*2 Unlocked	A*2 Locked	M	Weight [g]
AS12□1FS-M5E-02A	2	M5 x 0.8 10/32UNF	8 (9)	5.8	11	9	15.8	20.6	16.9	32.2	31.1	29.2	28.1	11.9	6
AS12□1FS-U10/32E-02A															
AS12□1FS-M5E-23A	3.2			7.2			17.2	22						13	
AS12□1FS-U10/32E-23A															
AS12□1FS-M5E-04A	4			8.2											
AS12□1FS-U10/32E-04A															
AS12□1FS-M5E-06A	6			10.4			18.6	23.4	16.5						7
AS12□1FS-U10/32E-06A															

*1 Reference dimensions
*2 Reference dimensions of threads after installation
* The value in [ ] indicates that the dimension for the width across flats is 9 mm.

Inch Size

[mm]

Model	d	T	H	D_1	D_3	D_4	L_1	L_2	L_3	L_4*1 Unlocked	L_4*1 Locked	A*2 Unlocked	A*2 Locked	M	Weight [g]
AS12□1FS-M5E-01A	1/8"	M5 x 0.8 10/32UNF	8 (9)	7.2	11	9	17.2	22	16.9	32.2	31.1	29.2	28.1	13	6
AS12□1FS-U10/32E-01A															
AS12□1FS-M5E-03A	5/32"			8.2											
AS12□1FS-U10/32E-03A															
AS12□1FS-M5E-07A	1/4"			11.2			18.6	23.4	16.5					13.3	7
AS12□1FS-U10/32E-07A															

*1 Reference dimensions
*2 Reference dimensions of threads after installation
* The value in [ ] indicates that the dimension for the width across flats is 9 mm.

Dimensions: Universal Type

Seal method: Gasket seal
For M5, 10-32UNF

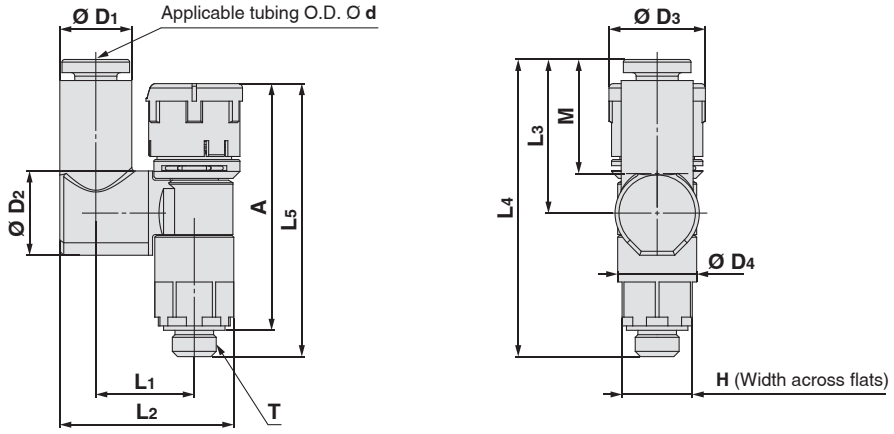

Metric Size

[mm]

Model	d	T	H	D_1	D_2	D_3	D_4	L_1	L_2	L_3	L_4	L_5*1		A*2		M	Weight [g]
												Unlocked	Locked	Unlocked	Locked		
AS13□1FS-M5E-23A	3.2	M5 x 0.8 10/32UNF	8 (9)	7.2	9.6	11	9	11.6	19.4	17.5	33.8	32.2	31.1	29.2	28.1	13	6
AS13□1FS-U10/32E-23A																	
AS13□1FS-M5E-04A	4			8.2				11.5	19.8								
AS13□1FS-U10/32E-04A																	
AS13□1FS-M5E-06A	6			10.4					20.9	20.4	36.6						7
AS13□1FS-U10/32E-06A																	

*1 Reference dimensions
*2 Reference dimensions of threads after installation
* The value in [ ] indicates that the dimension for the width across flats is 9 mm.

Inch Size

[mm]

Model	d	T	H	D_1	D_2	D_3	D_4	L_1	L_2	L_3	L_4	L_5*1		A*2		M	Weight [g]
												Unlocked	Locked	Unlocked	Locked		
AS13□1FS-M5E-01A	1/8"	M5 x 0.8 10/32UNF	8 (9)	7.2	9.6	11	9	11.6	19.4	17.5	33.8	32.2	31.1	29.2	28.1	13	6
AS13□1FS-U10/32E-01A																	
AS13□1FS-M5E-03A	5/32"			8.2				11.5	19.8								
AS13□1FS-U10/32E-03A																	
AS13□1FS-M5E-07A	1/4"			10.4					20.9	20.4	36.6					13.3	7
AS13□1FS-U10/32E-07A																	

*1 Reference dimensions
*2 Reference dimensions of threads after installation
* The value in [ ] indicates that the dimension for the width across flats is 9 mm.

Dimensions: Elbow Type

Seal method: Sealant
For R, NPT thread

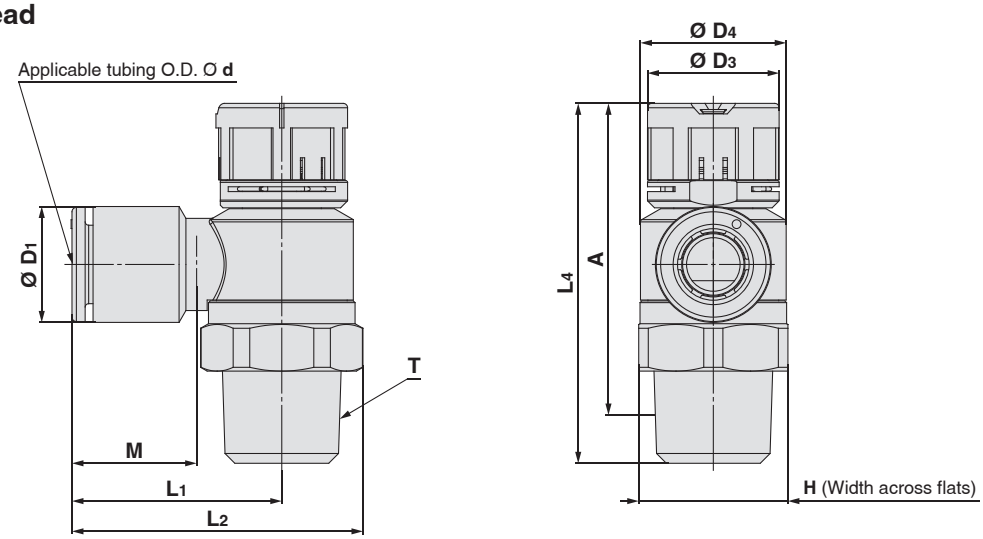

Metric Size

[mm]

Model	d	T	H	D_1	D_3	D_4	L_1	L_2	L_3	L_4*1 Unlocked	L_4*1 Locked	A*2 Unlocked	A*2 Locked	M	Weight [g]
AS22□1FS-01-23(S)A	3.2	1/8	13 (12.7)	7.2	14	12.6	19.1	26.1 (26)	19.1	36.6	35.1	33.5	32.0	13	10 (10)
AS22□1FS-01-04(S)A	4			8.2											
AS22□1FS-01-06(S)A	6			10.4											11 (10)
AS22□1FS-01-08(S)A	8			13.2			22.4	29.4 (29.3)						14.2	12 (11)
AS22□1FS-01-10(S)A	10			15.9			25.3	32.3 (32.2)						15.6	13 (12)
AS22□1FS-02-23(S)A	3.2	1/4	17 (17.5)	7.2	15	16.6	20.9	30 (30.3)	22.6	43.3	41.8	37.8	36.3	13.3	20 (21)
AS22□1FS-02-04(S)A	4			8.2											
AS22□1FS-02-06(S)A	6			10.4			23.4	32.5 (32.8)							
AS22□1FS-02-08(S)A	8			13.2			23.9	33 (33.3)						14.2	21 (22)
AS22□1FS-02-10(S)A	10			15.9			26.9	36 (36.3)						15.6	22 (23)
AS32□1FS-02-06(S)A	6	1/4	19	10.4	17.7	19	21.8	32.1	36.4	57.3	55.8	52.1	50.6	13.3	44 (45)
AS32□1FS-02-08(S)A	8			13.2			22.7	33						14.2	
AS32□1FS-02-10(S)A	10			15.9			26.7	37	35.7					15.6	35 (36)
AS32□1FS-02-12(S)A	12			18.5			29.7	40	34.5					17	47 (48)
AS32□1FS-03-06(S)A	6	3/8	19	10.4	17.7	19	21.8	32.1	28.7	49.6	48.1	44.4	42.9	13.3	35 (36)
AS32□1FS-03-08(S)A	8			13.2			22.7	33						14.2	
AS32□1FS-03-10(S)A	10			15.9			26.7	37	28					15.6	26 (27)
AS32□1FS-03-12(S)A	12			18.5			29.7	40	26.8					17	38 (39)
AS42□1FS-04-10(S)A	10	1/2	24 (23.8)	15.9	19.7	24	27.4	40.3 (40.2)	36.15	58.5	57.0	51.4	49.9	15.6	57 (56)
AS42□1FS-04-12(S)A	12			18.5			30.8	43.7 (43.6)	35.1					17	59 (58)
AS42□1FS-04-16(S)A	16			23.8			34.8	47.7 (47.6)	32.7					20.6	63 (62)

*1 Reference dimensions
*2 Reference dimensions of threads after installation
* The values in ( ) are for NPT thread.

Dimensions: Elbow Type

Seal method: Sealant
For R, NPT thread

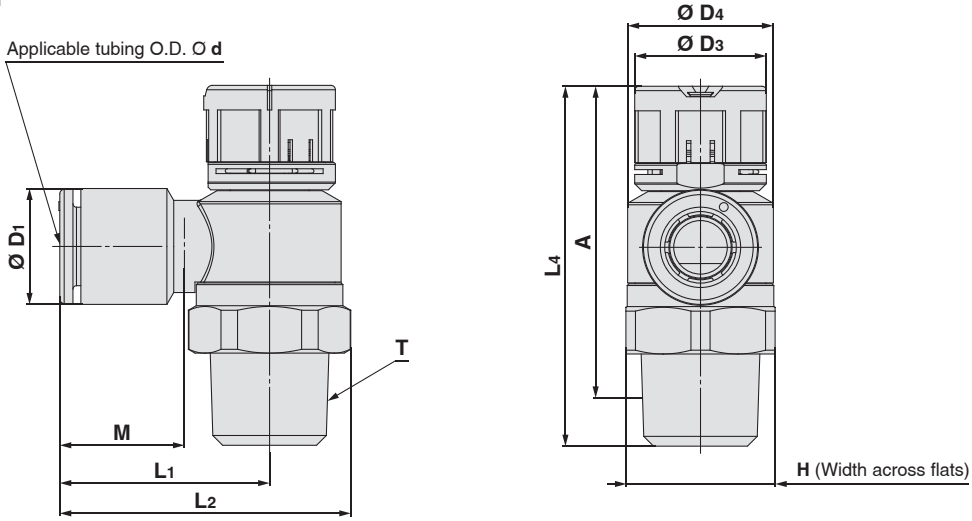

Inch Size

[mm]

Model	d	T	H	D_1	D_3	D_4	L_1	L_2	L_3	L_4*1 Unlocked	L_4*1 Locked	A*2 Unlocked	A*2 Locked	M	Weight [g]
AS22□1FS-01-01(S)A	1/8"	1/8	13 (12.7)	7.2	14	12.6	19.1	26.1 (26)	19.1	36.6	35.1	33.5	32.0	13	10 (10)
AS22□1FS-01-03(S)A	5/32"			8.2											
AS22□1FS-01-07(S)A	1/4"			11.2			20.8	27.8 (27.7)						13.3	11 (10)
AS22□1FS-01-09(S)A	5/16"			13.2			22.4	29.4 (29.3)						14.2	12 (11)
AS22□1FS-02-01(S)A	1/8"	1/4	17 (17.5)	7.2	15	16.6	20.9	30 (30.3)	22.6	43.3	41.8	37.8	36.3	13.3	20 (21)
AS22□1FS-02-03(S)A	5/32"			8.2											
AS22□1FS-02-07(S)A	1/4"			11.2			23.4	32.5 (32.8)							21 (21)
AS22□1FS-02-09(S)A	5/16"			13.2			23.9	33 (33.3)						14.2	21 (22)
AS22□1FS-02-11(S)A	3/8"			15.5			26.4	35.5 (35.8)						15.6	22 (23)
AS32□1FS-02-07(S)A	1/4"	3/8	19	11.2	17.7	19	21.8	32.1	28.7	57.3	55.8	52.1	50.6	13.3	44 (45)
AS32□1FS-02-09(S)A	5/16"			13.2			22.7	33						14.2	
AS32□1FS-02-11(S)A	3/8"			15.5			26.7	37	28.2					15.6	45 (46)
AS32□1FS-03-07(S)A	1/4"	3/8	19	11.2	17.7	19	21.8	32.1	28.7	49.6	48.1	44.4	42.9	13.3	35 (36)
AS32□1FS-03-09(S)A	5/16"			13.2			22.7	33						14.2	
AS32□1FS-03-11(S)A	3/8"			15.5			26.7	37	28.2					15.6	36 (37)
AS42□1FS-04-11(S)A	3/8"	1/2	24 (23.8)	15.5	19.7	24	27.4	40.3 (40.2)	36.2	58.5	57.0	51.4	49.9	15.6	59 (58)
AS42□1FS-04-13(S)A	1/2"			19.3			30.9	43.8 (43.7)	34.7					17	61 (60)

*1 Reference dimensions
*2 Reference dimensions of threads after installation
* The values in ( ) are for NPT thread.

Dimensions: Universal Type

Seal method: Sealant
For R, NPT thread

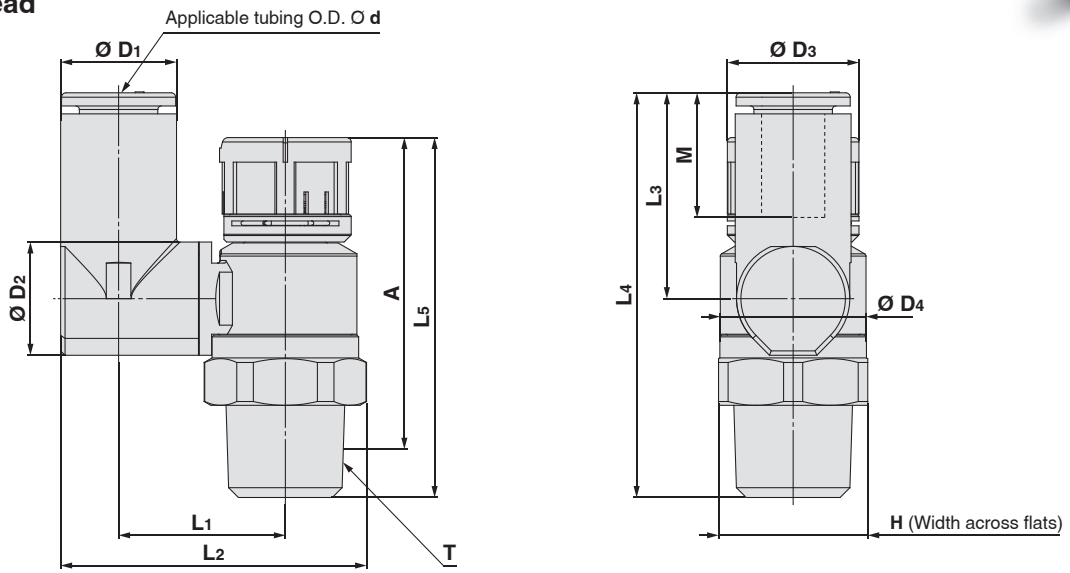

Metric Size

[mm]

Model	d	T	H	D_1	D_2	D_3	D_4	L_1	L_2	L_3	L_4	L_5*1		A*2		M	Weight [g]
												Unlocked	Locked	Unlocked	Locked		
AS23□1FS-01-23(S)A	3.2	1/8	13 (12.7)	7.2	9.6	14	12.6	13.3	24	17.5	36	36.6	35.1	33.5	32.0	13	10 (10)
AS23□1FS-01-04(S)A	4			8.2				13.9	25.1								
AS23□1FS-01-06(S)A	6			10.4					26.2	20.4	38.8						11 (10)
AS23□1FS-01-08(S)A	8			13.2	10.2			16.4	30.1	21.5	40					14.2	12 (11)
AS23□1FS-02-04(S)A	4	1/4	17 (17.5)	8.2	12.9	15	16.6	16.5	29.9	17.5	40.1	43.3	41.8	37.8	36.3	13	20 (21)
AS23□1FS-02-06(S)A	6			10.4				19	33.8	21.4	43.9					14.2	
AS23□1FS-02-08(S)A	8			13.2					34.9	23.5	46					15.6	21 (22)
AS23□1FS-02-10(S)A	10			15.9				20.9	38.1	24.7	47.3					17	22 (23)
AS33□1FS-02-06(S)A	6	1/4	19	10.4	12.9	17.7	19	20.2	36	21.4	57.8	57.3	55.8	52.1	50.6	13	44 (45)
AS33□1FS-02-08(S)A	8			13.2					37.1	23.5	59.9					14.2	
AS33□1FS-02-10(S)A	10			15.9	17.4			23	41.2	26.1	82.5					15.6	35 (36)
AS33□1FS-02-12(S)A	12			18.5					42.5	28.3	64.7					17	47 (48)
AS33□1FS-03-06(S)A	6	3/8	19	10.4	12.9	17.7	19	20.2	36	21.4	50.1	49.6	48.1	44.4	42.9	13	35 (36)
AS33□1FS-03-08(S)A	8			13.2					37.1	23.5	52.2					14.2	
AS33□1FS-03-10(S)A	10			15.9	17.4			23	41.2	26.1	54.8					15.6	26 (27)
AS33□1FS-03-12(S)A	12			18.5					42.5	28.3	57					17	38 (39)
AS43□1FS-04-10(S)A	10	1/2	24 (23.8)	15.9	17.4	19.7	24	25.6	46.4	26.1	61.2	58.5	57.0	51.4	49.9	15.6	59 (58)
AS43□1FS-04-12(S)A	12			18.5	21			26.2	48.3	28.3	63.4					17	61 (60)

*1 Reference dimensions
*2 Reference dimensions of threads after installation
* The values in ( ) are for NPT thread.

Dimensions: Universal Type

Seal method: Sealant
For R, NPT thread

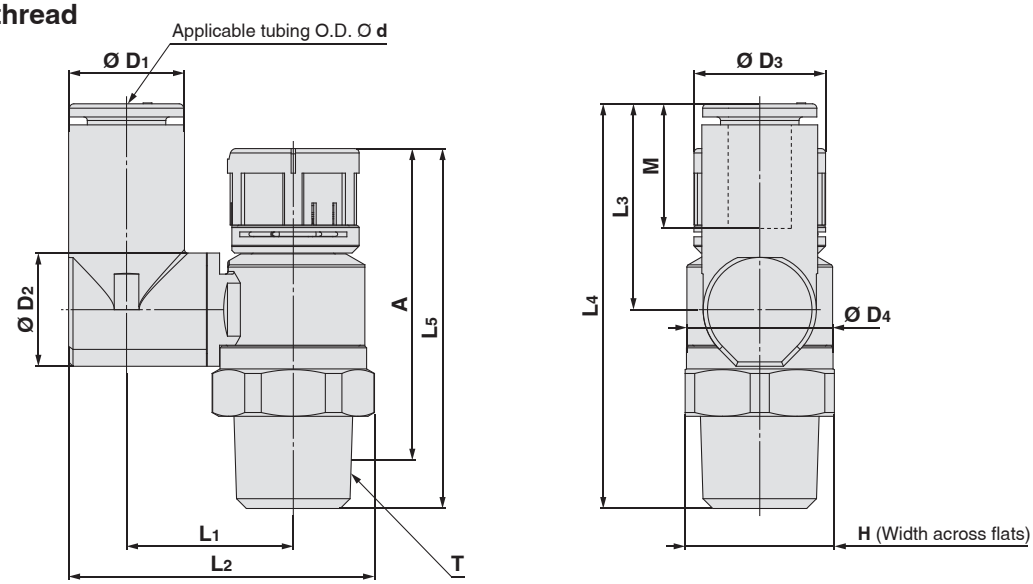

Inch Size

[mm]

Model	d	T	H	D_1	D_2	D_3	D_4	L_1	L_2	L_3	L_4	L_5*1		A*2		M	Weight [g]
												Unlocked	Locked	Unlocked	Locked		
AS23□1FS-01-01(S)A	1/8"	1/8	13 (12.7)	7.2	9.6	14	12.6	13.3	24	17.5	36	36.6	35.1	33.5	32.0	13	10 (10)
AS23□1FS-01-03(S)A	5/32"			8.2				13.9	25.1								
AS23□1FS-01-07(S)A	1/4"			10.4					26.2	20.4	38.8					13.3	11 (10)
AS23□1FS-01-09(S)A	5/16"			13.2	10.2			16.4	30.1	21.5	40					14.2	12 (11)
AS23□1FS-02-03(S)A	5/32"	1/4	17 (17.5)	8.2	12.9	15	16.6	16.5	29.9	17.5	40.1	43.3	41.8	37.8	36.3	13.3	20 (21)
AS23□1FS-02-07(S)A	1/4"			10.4				19	33.8	21.4	43.9						21 (21)
AS23□1FS-02-09(S)A	5/16"			13.2					34.9	23.5	46					14.2	21 (22)
AS23□1FS-02-11(S)A	3/8"			15.9				20.9	38.1	24.7	47.3					15.6	22 (23)
AS33□1FS-02-07(S)A	1/4"	1/4	19	11.2	12.9	17.7	19	20.2	36	21.4	57.8	57.3	55.8	52.1	50.6	13.3	44 (45)
AS33□1FS-02-09(S)A	5/16"			13.2					37.1	23.5	59.9					14.2	
AS33□1FS-02-11(S)A	3/8"			15.9	17.4			23	41.2	26.1	82.5					15.6	45 (46)
AS33□1FS-03-07(S)A	1/4"	3/8	19	11.2	12.9	17.7	19	20.2	36	21.4	50.1	49.6	48.1	44.4	42.9	13.3	35 (36)
AS33□1FS-03-09(S)A	5/16"			13.2					37.1	23.5	52.2					14.2	
AS33□1FS-03-11(S)A	3/8"			15.9	17.4			23	41.2	26.1	54.8					15.6	36 (37)
AS43□1FS-04-11(S)A	3/8"	1/2	24 (23.8)	15.9	17.4	19.7	24	25.6	46.4	26.1	61.2	58.5	57.0	51.4	49.9	15.6	59 (58)
AS43□1FS-04-13(S)A	1/2"			18.5	21			26.2	48.3	28.3	63.4					17	61 (60)

*1 Reference dimensions
*2 Reference dimensions of threads after installation
* The values in ( ) are for NPT thread.

Dimensions: Elbow Type

Seal method: Face seal
For G thread

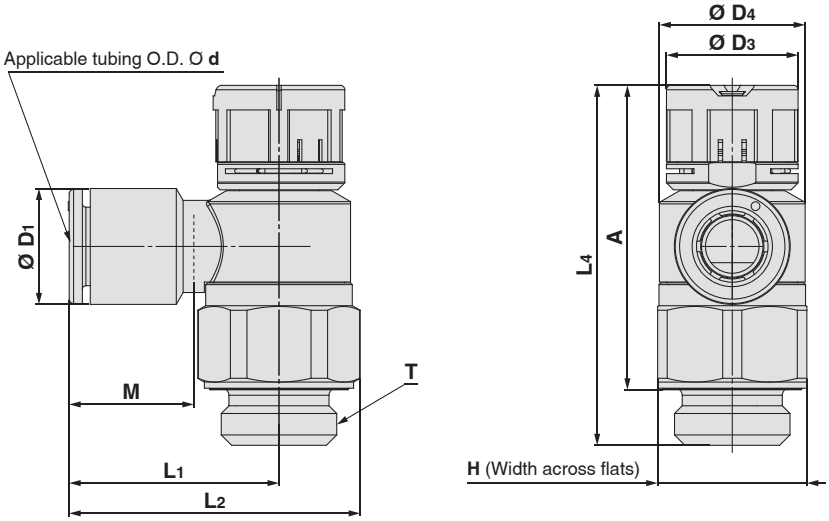

Metric Size

[mm]

Model	d	T	H	D_1	D_3	D_4	L_1	L_2	L_3	L_4*1 Unlocked	L_4*1 Locked	A*2 Unlocked	A*2 Locked	M	Weight [g]
AS22□1FS-G01-23A	3.2	1/8	13	7.2	14	12.6	19.1	26.1	18.8	36.6	35.1	31.1	29.6	13	12
AS22□1FS-G01-04A	4			8.2											
AS22□1FS-G01-06A	6			10.4											
AS22□1FS-G01-08A	8			13.2			22.4	29.4						14.2	13
AS22□1FS-G01-10A	10			15.9			25.3	32.3						15.6	14
AS22□1FS-G02-23A	3.2	1/4	17	7.2	15	16.6	20.9	30.2	22.6	43.1	41.6	36.6	35.1	13.3	23
AS22□1FS-G02-04A	4			8.2											
AS22□1FS-G02-06A	6			10.4			23.4	32.7							
AS22□1FS-G02-08A	8			13.2			23.9	33.2						14.2	24
AS22□1FS-G02-10A	10			15.9			26.9	36.2						15.6	25
AS32□1FS-G02-06A	6	1/4	21	10.4	17.7	19	21.8	33	36.4	57.2	55.7	48.7	47.2	13.3	51
AS32□1FS-G02-08A	8			13.2			22.7	33.9						14.2	
AS32□1FS-G02-10A	10			15.9			26.7	37.9	35.7					15.6	53
AS32□1FS-G02-12A	12			18.5			29.7	40.9	34.5					17	55
AS32□1FS-G03-06A	6	3/8	21	10.4	17.7	19	21.8	33	28.7	49.5	48.0	42.0	40.5	13.3	41
AS32□1FS-G03-08A	8			13.2			22.7	33.9						14.2	42
AS32□1FS-G03-10A	10			15.9			26.7	37.9	28					15.6	43
AS32□1FS-G03-12A	12			18.5			29.7	40.9	26.8					17	45
AS42□1FS-G04-10A	10	1/2	27	15.9	19.7	24	27.4	41.8	36.2	58.4	56.9	49.4	47.9	15.6	75
AS42□1FS-G04-12A	12			18.5			30.8	45.2	35.1					17	77
AS42□1FS-G04-16A	16			23.8			34.8	49.2	32.7					20.6	81

*1 Reference dimensions *2 Reference dimensions of threads after installation

Dimensions: Universal Type

Seal method: Face seal
For G thread

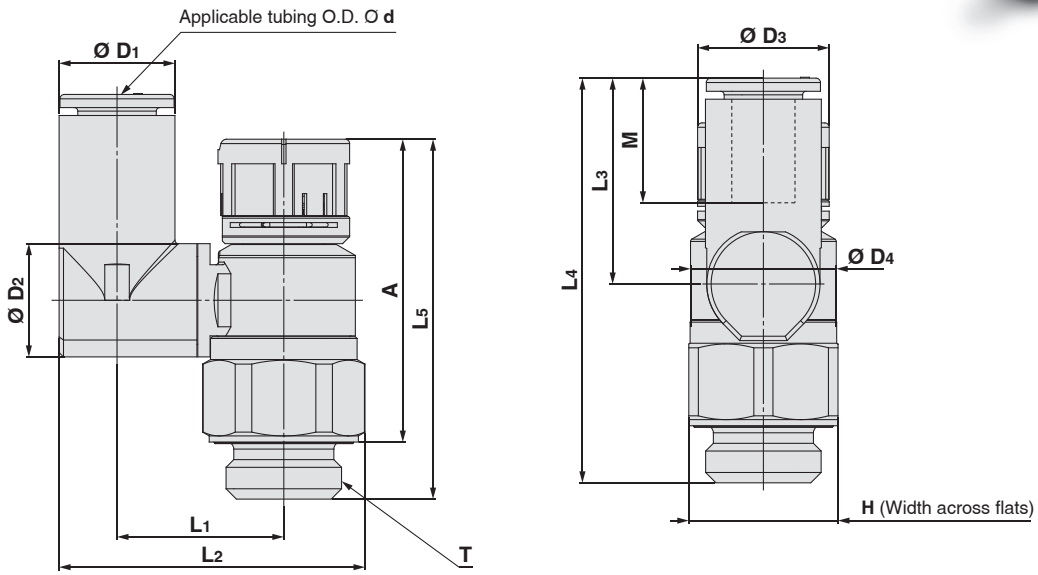

Metric Size

[mm]

Model	d	T	H	D_1	D_3	D_4	L_1	L_2	L_3	L_4	L_5*1		A*2		M	Weight [g]
											Unlocked	Locked	Unlocked	Locked		
AS23□1FS-G01-23A	3.2	1/8	13	7.2	14	12.6	13.2	24	17.5	35.7	36.6	35.1	31.1	29.6	13	12
AS23□1FS-G01-04A	4			8.2			13.9	25.1								
AS23□1FS-G01-06A	6			10.4				26.2	20.4	38.5						
AS23□1FS-G01-08A	8			13.2			16.4	30.1	21.5	39.7					14.2	13
AS23□1FS-G02-04A	4	1/4	17	8.2	15	16.6	16.5	29.9	17.5	40.1	43.1	41.6	36.6	35.1	13.3	23
AS23□1FS-G02-06A	6			10.4			19	33.8	21.4	43.9						
AS23□1FS-G02-08A	8			13.2				34.9	23.5	46					14.2	24
AS23□1FS-G02-10A	10			15.9			20.9	38.1	24.7	47.3					15.6	25
AS33□1FS-G02-06A	6	1/4	21	10.4	17.7	19	20.2	36.1	21.4	57.8	57.2	55.7	48.7	47.2	13.3	51
AS33□1FS-G02-08A	8			13.2				38	23.5	59.9					14.2	
AS33□1FS-G02-10A	10			15.9			23	42.2	26.1	58					15.6	53
AS33□1FS-G02-12A	12			18.5				43.5	28.3	59.9					17	55
AS33□1FS-G03-06A	6	3/8	21	10.4	17.7	19	20.2	36.6	21.4	50.1	49.5	48.0	42.0	40.5	13.3	41
AS33□1FS-G03-08A	8			13.2				38	23.5	52.2					14.2	42
AS33□1FS-G03-10A	10			15.9			23	42.2	28.1	50.3					15.6	43
AS33□1FS-G03-12A	12			18.5				43.5	28.3	52.2					17	45
AS43□1FS-G04-10A	10	1/2	27	15.9	19.7	24	25.6	47.9	26.1	61.2	58.4	56.9	49.4	47.9	15.6	75
AS43□1FS-G04-12A	12			18.5			26.2	49.8	28.3	63.4					17	77

*1 Reference dimensions *2 Reference dimensions of threads after installation

Made to Order

Please contact SMC for detailed dimensions, specifications and lead times.

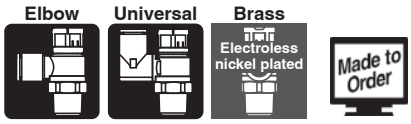

1 Lubricant: Vaseline -X12

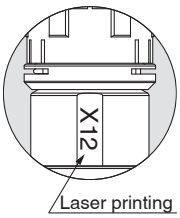

Example) AS2201FS-01-04SA-X12

2 Grease-free (Seal: Fluorine-coated) + Restrictor (Without check valve) -X21

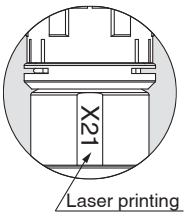

Example) AS2201FS-01-04SA-X21

- Not particle-free
- Direction is not specified as there is no check valve. Products are available by the product number for meter-out type. Product number for meter-in type is not available.
- Only the needle and O-ring are fluorine-coated.
- The parts in contact with fluid are grease-free.

3 Restrictor (Without check valve) -X214

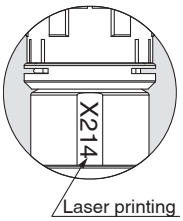

Example) AS2201FS-01-04SA-X214

- Direction is not specified as there is no check valve. Products are available by the product number for meter-out type. Product number for meter-in type is not available.

4 Clean series 10-

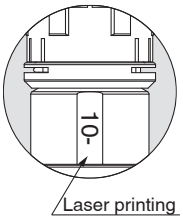

Example) 10-AS2201FS-01-04SA

- Fluorine grease is used.
- The cleanliness class (ISO class) is 5.

Speed Controller with Compact Indicator
Stainless Steel Type
Elbow Type/Universal Type

AS-FSGA Series RoHS

Model

Model	Port size		Seal method	Applicable tubing O.D.														∗3 Max. number of rotations
				Metric size								Inch size						
				2∗2	3.2	4	6	8	10	12	16	1/8"	5/32"	1/4"	5/16"	3/8"	1/2"	
AS1□□1FSG-M5A	M5 x 0.8		Gasket seal	●∗4	●	●	●					●	●	●				8
AS1□□1FSG-U10/32A	10-32UNF		Gasket seal	●∗4	●	●	●					●	●	●				8
AS2□□1FSG-□01A	R NPT	1/8	Sealant∗1		●	●	●	●	●∗4			●	●	●	●			10
AS2□□1FSG-□02A	R NPT	1/4	Sealant∗1		●∗4	●	●	●	●			●∗4	●	●	●	●		10
AS3□□1FSG-□02A	R NPT	1/4	Sealant∗1				●	●	●	●				●	●	●		10
AS3□□1FSG-□03A	R NPT	3/8	Sealant∗1				●	●	●	●				●	●	●		10
AS4□□1FSG-□04A	R NPT	1/2	Sealant∗1						●	●	●∗4					●	●	10
AS2□□1FSG-G01A	G	1/8	Face seal		●	●	●	●	●∗4									10
AS2□□1FSG-G02A	G	1/4	Face seal		●∗4	●	●	●	●									10
AS3□□1FSG-G02A	G	1/4	Face seal				●	●	●	●								10
AS3□□1FSG-G03A	G	3/8	Face seal				●	●	●	●								10
AS4□□1FSG-G04A	G	1/2	Face seal						●	●	●∗4							10

∗1 "Without sealant" type can be selected as a standard option.
∗2 Only polyurethane tubing is applicable for Ø 2.
∗3 There are differences in actual rate as by the indicator window over the maximum number of rotations depending on the individual product.
∗4 The universal type is not available.

Flow Direction Symbols on Body

	Meter-out	Meter-in
Symbol		

Specifications

Fluid	Air
Proof pressure	1.5 MPa
Max. operating pressure	1 MPa
Min. operating pressure	0.1 MPa
Ambient and fluid temperatures	–5 to 60 °C (No freezing)
Applicable tubing material	Nylon, Soft nylon, Polyurethane∗1, FEP, PFA

∗1 Use caution at the max. operating pressure when using soft nylon or polyurethane tubing.
(Refer to the **catalogue on https://www.smc.eu** for details.)

Flow Rate and Sonic Conductance

Model		AS1□□1FSG-M5□A		AS2□□1FSG-01A			AS2□□1FSG-02A				AS3□□1FSG□A			AS4□□1FSG□A	
Tubing O.D.	Metric size	Ø 2	Ø 3.2 Ø 4 Ø 6	Ø 3.2	Ø 4	Ø 6 Ø 8 Ø 10	Ø 3.2	Ø 4	Ø 6	Ø 8 Ø 10	Ø 6	Ø 8	Ø 10 Ø 12	Ø 10	Ø 12 Ø 16
	Inch size	—	Ø 1/8" Ø 1/4" Ø 5/32"	Ø 1/8"	Ø 5/32"	Ø 1/4" Ø 5/16"	Ø 1/8"	Ø 5/32"	—	Ø 1/4" Ø 5/16" Ø 3/8"	Ø 1/4"	Ø 5/16"	Ø 3/8"	Ø 3/8"	Ø 1/2"
C values: Sonic conductance dm³/(s·bar)	Free flow	0.2	0.3	0.4	0.6	0.6	0.7	1.0	1.3	1.5	1.6	1.7	2.5	4.4	4.8
	Controlled flow	0.2	0.3	0.4	0.7	0.8	0.6	0.9	1.3		2.1	2.4	3.3	4.4	4.9
b values: Critical pressure ratio	Free flow	0.3	0.4	0.2		0.3	0.3		0.4		0.4		0.3	0.3	
	Controlled flow	0.2		0.2		0.3	0.3				0.3			0.3	
Q [l/min(ANR)]∗1	Free flow	51	82	96	144	153	178	254	354	408	435	462	636	1119	1220
	Controlled flow	48	72	96	168	203	153	229	331	331	534	610	839	1119	1246

∗ 10-32UNF has the same specification as M5.
∗ C and b values are for controlled flow with the needle fully open and free flow with the needle fully closed.
∗1 These values have been calculated according to ISO 6358 and indicate the flow rate under standard conditions with an inlet pressure of 0.6 MPa

⚠ Caution

Be sure to read this before handling the products.
Refer to the back cover for safety instructions. For flow control equipment precautions, refer to the "Handling Precautions for SMC Products" and the "Operation Manual" on the SMC website: https://www.smc.eu

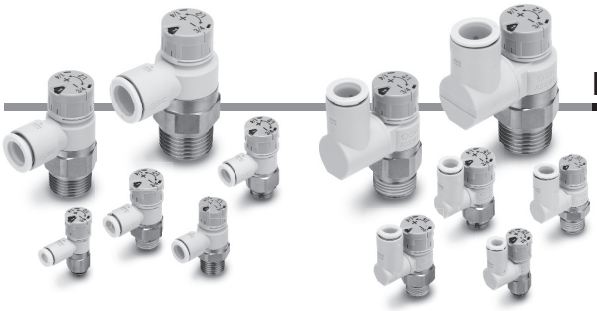

How to Order

Applicable tubing O.D.∗1

Metric size	
02	Ø 2
23	Ø 3.2∗2
04	Ø 4
06	Ø 6

Inch size	
01	Ø 1/8"
03	Ø 5/32"
07	Ø 1/4"

∗ 1 For selecting applicable tubing O.D., refer to the "Model" on page 16. The material can be visually identified by the colour of the release button. Stainless steel type: White
∗2 Use Ø 1/8" tubing.

Body size

1	M5 x 0.8 10-32UNF

Port size

M5	M5 x 0.8
U10/32	10-32UNF

Body Size 1 AS 1 2 0 1F S G – M5 – 06 A – ☐

Body Size 2/3/4 AS 2 2 0 1F S G – ☐ 01 – 06 S A – ☐

Body Size

2	1/8, 1/4
3	3/8
4	1/2

With indicator

Made to order
Refer to page 29 for details.

With compact indicator

Type

2	Elbow
3	Universal

Seal method

—	Without sealant
S	With sealant

∗ Face seal type is used for the G thread type. Select "—/Without sealant."
Example) AS2201FSG-G01-06A

Control type∗1

0	Meter-out
1	Meter-in

∗1 Meter-out and meter-in types can be visually identified by the colour of the knob.
Meter-out: Grey
Meter-in: Light blue

Applicable tubing O.D.∗1

Metric size	
23	Ø 3.2∗2
04	Ø 4
06	Ø 6
08	Ø 8
10	Ø 10
12	Ø 12
16	Ø 16

Inch size∗3	
01	Ø 1/8"
03	Ø 5/32"
07	Ø 1/4"
09	Ø 5/16"
11	Ø 3/8"
13	Ø 1/2"

∗1 For selecting applicable tubing O.D., refer to the "Model" on page 16.
∗2 Use Ø 1/8" tubing.
∗3 Only the metric size is available for the G thread type.

Stainless steel type

∗ The material can be visually identified by the colour of the release button.
Stainless steel type: White
∗ White is also used for inch size.

Thread type

—	R
N	NPT
G	G

Port size

01	1/8
02	1/4
03	3/8
04	1/2

Made to Order
(For details, refer to page 29.)

Symbol	Specifications
-X12	Lubricant: Vaseline
-X21	Grease-free (Seal: Fluorine-coated) + Restrictor (Without check valve)
-X214	Restrictor (Without check valve)
10-	Clean series

Needle Valve: Flow Rate Characteristics

AS1□01FSG-M5A, AS1□11FSG-M5A

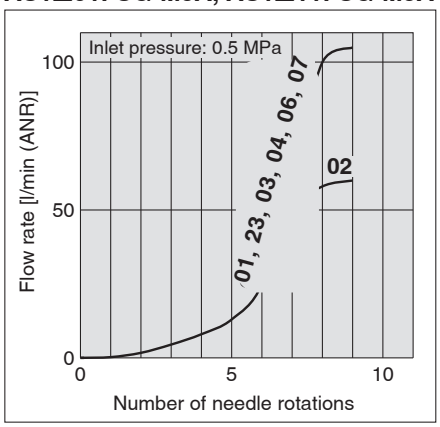

AS2□01FSG-01A, AS2□11FSG-01A

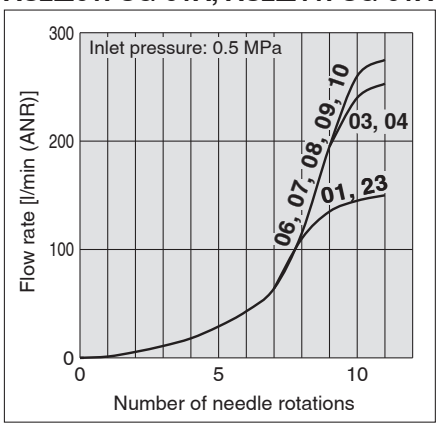

AS2□01FSG-02A, AS2□11FSG-02A

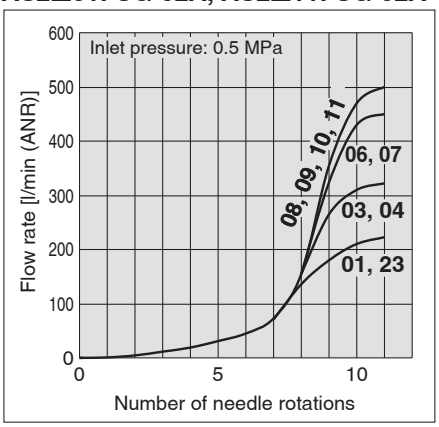

∗ -U10/32 has the same specification as M5.

AS3□01FSG□A, AS3□11FSG□A

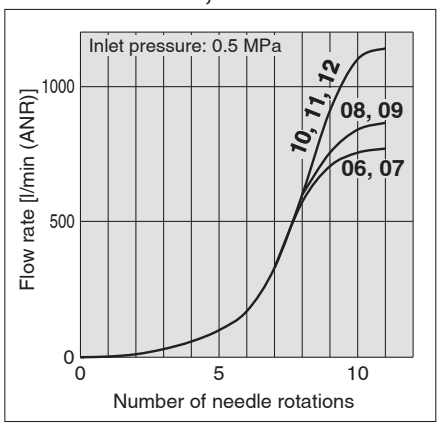

AS4□01FSG□A, AS4□11FSG□A

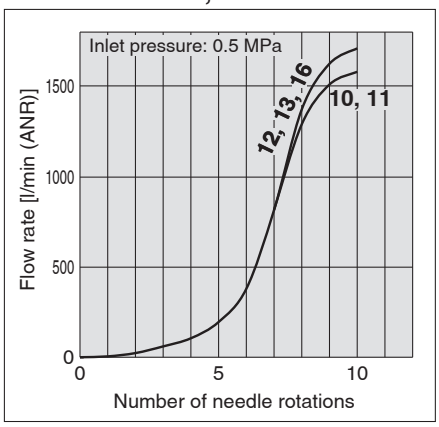

∗ The numbers above the flow rate characteristic curves in the charts show the applicable tubing outside diameter as defined by the product number.

Construction: Elbow Type

Seal method: Gasket seal
For M5, 10-32UNF

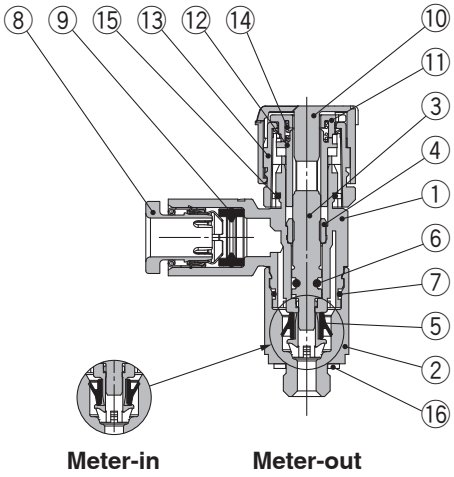

Seal method: Sealant
For R, NPT thread

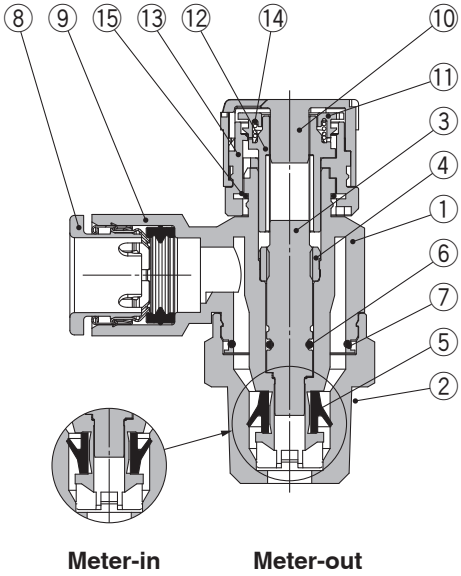

Seal method: Face seal
For G thread

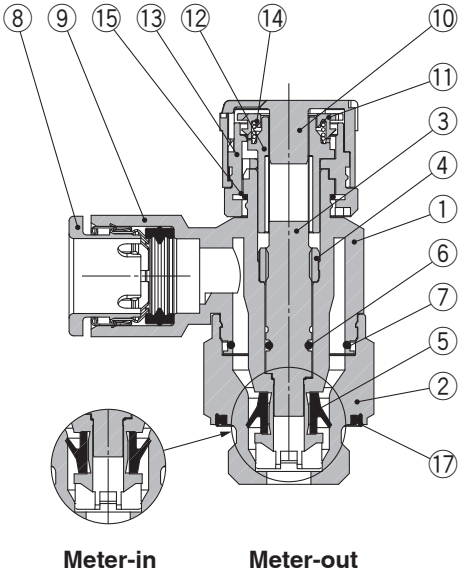

Component Parts

No.	Description	Material	Note
1	**Body A**	PBT	
2	**Body B**	Stainless steel	
3	**Needle**	PBT	
4	**Needle guide**	Stainless steel	
5	**U-seal**	HNBR	
6	**O-ring**	NBR	
7	**O-ring**	NBR	
8	**Cassette**	—	
9	**Seal**	NBR	
10	**Knob**	POM	
11	**Indicator gear**	POM	
12	**Shaft**	POM	
13	**Spacer**	PBT	
14	**Spring**	Stainless steel	
15	**Clip**	Stainless steel	
16	**Gasket**	NBR/Stainless steel	
17	**Seal**	NBR	

Construction: Universal Type

Seal method: Gasket seal
For M5, 10-32UNF

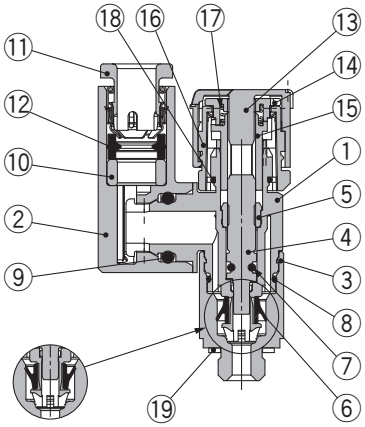

Meter-in Meter-out

Seal method: Sealant
For R, NPT thread

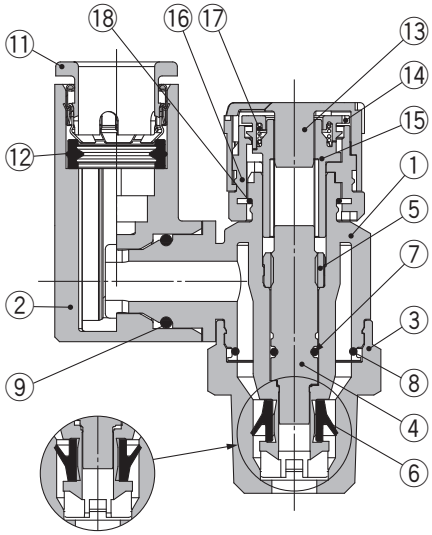

Meter-in Meter-out

Seal method: Face seal
For G thread

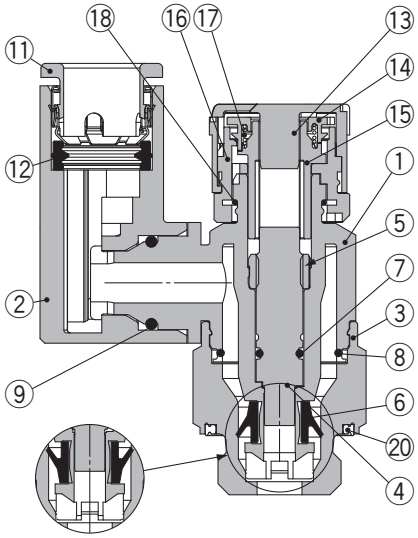

Meter-in Meter-out

Component Parts

No.	Description	Material	Note
1	**Body A**	PBT	
2	**Elbow body**	PBT	
3	**Body B**	Stainless steel	
4	**Needle**	PBT	
5	**Needle guide**	Stainless steel	
6	**U-seal**	HNBR	
7	**O-ring**	NBR	
8	**O-ring**	NBR	
9	**O-ring**	NBR	
10	**Spacer**	PBT	Only for Ø 3.2, Ø 1/8", Ø 4, Ø 5/32", and Ø 6
11	**Cassette**	—	
12	**Seal**	NBR	
13	**Knob**	POM	
14	**Indicator gear**	POM	
15	**Shaft**	POM	
16	**Spacer**	PBT	
17	**Spring**	Stainless steel	
18	**Clip**	Stainless steel	
19	**Gasket**	NBR/Stainless steel	
20	**Seal**	NBR	

Dimensions: Elbow Type

Seal method: Gasket seal
For M5, 10-32UNF

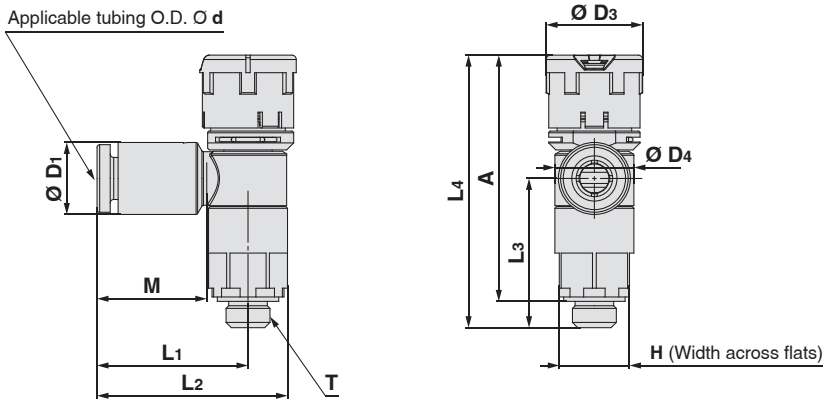

Metric Size

[mm]

Model	d	T	H	D_1	D_3	D_4	L_1	L_2	L_3	L_4*1		A*2		M	Weight [g]
										Unlocked	Locked	Unlocked	Locked		
AS12□1FSG-M5-02A	2	M5 x 0.8 10/32UNF	8	5.8	11	9	15.8	20.6	16.9	32.2	31.1	29.2	28.1	11.9	6
AS12□1FSG-U10/32-02A															
AS12□1FSG-M5-23A	3.2			7.2			17.2	22						13	
AS12□1FSG-U10/32-23A															
AS12□1FSG-M5-04A	4			8.2											
AS12□1FSG-U10/32-04A															
AS12□1FSG-M5-06A	6			10.4			18.6	23.4	16.5						7
AS12□1FSG-U10/32-06A															

*1 Reference dimensions
*2 Reference dimensions of threads after installation

Inch Size

[mm]

Model	d	T	H	D_1	D_3	D_4	L_1	L_2	L_3	L_4*1		A*2		M	Weight [g]
										Unlocked	Locked	Unlocked	Locked		
AS12□1FSG-M5-01A	1/8"	M5 x 0.8 10/32UNF	8	7.2	11	9	17.2	22	16.9	32.2	31.1	29.2	28.1	13	6
AS12□1FSG-U10/32-01A															
AS12□1FSG-M5-03A	5/32"			8.2											
AS12□1FSG-U10/32-03A															
AS12□1FSG-M5-07A	1/4"			11.2			18.6	23.4	16.5					13.3	7
AS12□1FSG-U10/32-07A															

*1 Reference dimensions
*2 Reference dimensions of threads after installation

Dimensions: Universal Type

Seal method: Gasket seal
For M5, 10-32UNF

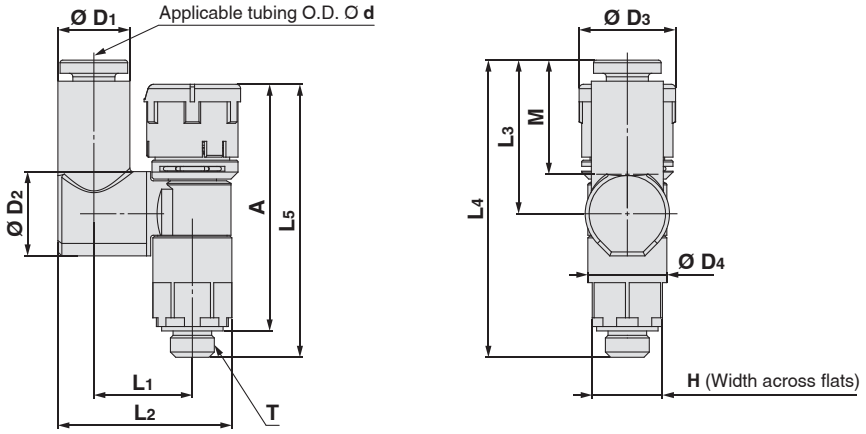

Metric Size

[mm]

Model	d	T	H	D_1	D_2	D_3	D_4	L_1	L_2	L_3	L_4	L_5*1		A*2		M	Weight [g]
												Unlocked	Locked	Unlocked	Locked		
AS13□1FSG-M5-23A	3.2	M5 x 0.8 10/32UNF	8	7.2	9.6	11	9	11.6	19.4	17.5	33.8	32.2	31.1	29.2	28.1	13	6
AS13□1FSG-U10/32-23A																	
AS13□1FSG-M5-04A	4			8.2				11.5	19.8								
AS13□1FSG-U10/32-04A																	
AS13□1FSG-M5-06A	6			10.4					20.9	20.4	36.6						7
AS13□1FSG-U10/32-06A																	

*1 Reference dimensions
*2 Reference dimensions of threads after installation

Inch Size

[mm]

Model	d	T	H	D_1	D_2	D_3	D_4	L_1	L_2	L_3	L_4	L_5*1		A*2		M	Weight [g]
												Unlocked	Locked	Unlocked	Locked		
AS13□1FSG-M5-01A	1/8"	M5 x 0.8 10/32UNF	8	7.2	9.6	11	9	11.6	19.4	17.5	33.8	32.2	31.1	29.2	28.1	13	6
AS13□1FSG-U10/32-01A																	
AS13□1FSG-M5-03A	5/32"			8.2				11.5	19.8								
AS13□1FSG-U10/32-03A																	
AS13□1FSG-M5-07A	1/4"			10.4					20.9	20.4	36.6					13.3	7
AS13□1FSG-U10/32-07A																	

*1 Reference dimensions
*2 Reference dimensions of threads after installation

Dimensions: Elbow Type

Seal method: Sealant
For R, NPT thread

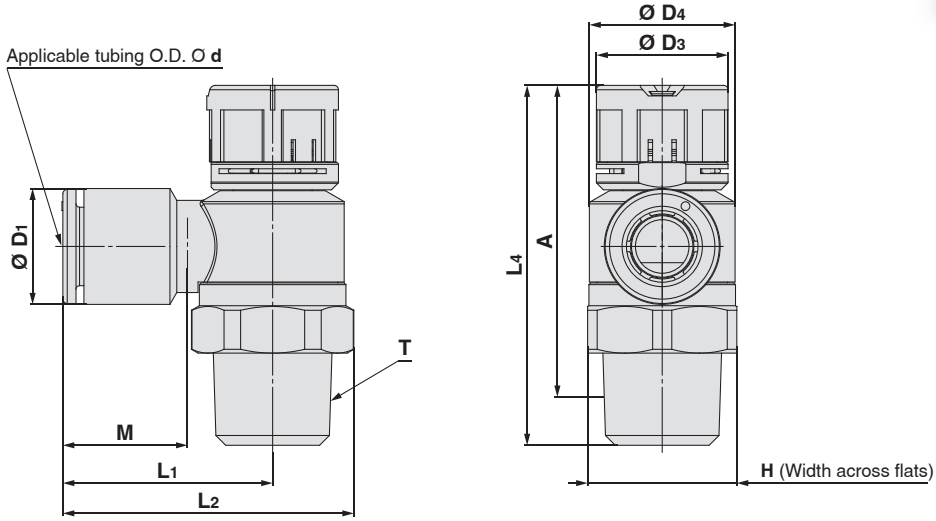

Metric Size

[mm]

Model	d	T	H	D_1	D_3	D_4	L_1	L_2	L_3	L_4*1 Unlocked	L_4*1 Locked	A*2 Unlocked	A*2 Locked	M	Weight [g]
AS22□1FSG-01-23(S)A	3.2	1/8	13 (12.7)	7.2	14	12.6	19.1	26.1 (26)	19.1	36.6	35.1	33.5	32.0	13.3	10 (10)
AS22□1FSG-01-04(S)A	4			8.2											
AS22□1FSG-01-06(S)A	6			10.4											11 (10)
AS22□1FSG-01-08(S)A	8			13.2			22.4	29.4 (29.3)						14.2	12 (11)
AS22□1FSG-01-10(S)A	10			15.9			25.3	32.3 (32.2)						15.6	13 (12)
AS22□1FSG-02-23(S)A	3.2	1/4	17 (17.5)	7.2	15	16.6	20.9	30 (30.3)	22.6	43.3	41.8	37.8	36.3	13.3	20 (21)
AS22□1FSG-02-04(S)A	4			8.2											
AS22□1FSG-02-06(S)A	6			10.4			23.4	32.5 (32.8)							
AS22□1FSG-02-08(S)A	8			13.2			23.9	33 (33.3)						14.2	21 (22)
AS22□1FSG-02-10(S)A	10			15.9			26.9	36 (36.3)						15.6	22 (23)
AS32□1FSG-02-06(S)A	6	1/4	19	10.4	17.7	19	21.8	32.1	36.4	57.3	55.8	52.1	50.6	13.3	44 (45)
AS32□1FSG-02-08(S)A	8			13.2			22.7	33						14.2	
AS32□1FSG-02-10(S)A	10			15.9			26.7	37	35.7					15.6	35 (36)
AS32□1FSG-02-12(S)A	12			18.5			29.7	40	34.5					17	47 (48)
AS32□1FSG-03-06(S)A	6	3/8	19	10.4	17.7	19	21.8	32.1	28.7	49.6	48.1	44.4	42.9	13.3	35 (36)
AS32□1FSG-03-08(S)A	8			13.2			22.7	33						14.2	
AS32□1FSG-03-10(S)A	10			15.9			26.7	37	28					15.6	26 (27)
AS32□1FSG-03-12(S)A	12			18.5			29.7	40	26.8					17	38 (39)
AS42□1FSG-04-10(S)A	10	1/2	24 (23.8)	15.9	19.7	24	27.4	40.3 (40.2)	36.15	58.5	57.0	51.4	49.9	15.6	57 (56)
AS42□1FSG-04-12(S)A	12			18.5			30.8	43.7 (43.6)	35.1					17	59 (58)
AS42□1FSG-04-16(S)A	16			23.8			34.8	47.7 (47.6)	32.7					20.6	63 (62)

*1 Reference dimensions
*2 Reference dimensions of threads after installation
* The values in ( ) are for NPT thread.

Dimensions: Elbow Type

Seal method: Sealant
For R, NPT thread

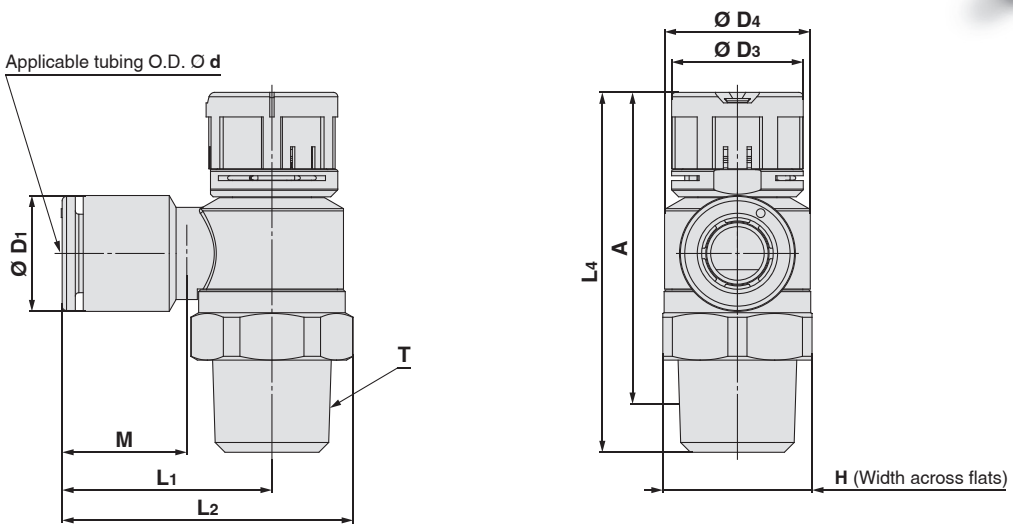

Inch Size

[mm]

Model	d	T	H	D_1	D_3	D_4	L_1	L_2	L_3	L_4*1 Unlocked	L_4*1 Locked	A*2 Unlocked	A*2 Locked	M	Weight [g]
AS22□1FSG-01-01(S)A	1/8"	1/8	13 (12.7)	7.2	14	12.6	19.1	26.1 (26)	19.1	36.6	35.1	33.5	32.0	13.3	10 (10)
AS22□1FSG-01-03(S)A	5/32"			8.2											
AS22□1FSG-01-07(S)A	1/4"			11.2			20.8	27.8 (27.7)							11 (10)
AS22□1FSG-01-09(S)A	5/16"			13.2			22.4	29.4 (29.3)						14.2	12 (11)
AS22□1FSG-02-01(S)A	1/8"	1/4	17 (17.5)	7.2	15	16.6	20.9	30 (30.3)	22.6	43.3	41.8	37.8	36.3	13.3	20 (21)
AS22□1FSG-02-03(S)A	5/32"			8.2											
AS22□1FSG-02-07(S)A	1/4"			11.2			23.4	32.5 (32.8)							21 (21)
AS22□1FSG-02-09(S)A	5/16"			13.2			23.9	33 (33.3)						14.2	21 (22)
AS22□1FSG-02-11(S)A	3/8"			15.5			26.4	35.5 (35.8)						15.6	22 (23)
AS32□1FSG-02-07(S)A	1/4"	3/8	19	11.2	17.7	19	21.8	32.1	28.7	57.3	55.8	52.1	50.6	13.3	44 (45)
AS32□1FSG-02-09(S)A	5/16"			13.2			22.7	33						14.2	
AS32□1FSG-02-11(S)A	3/8"			15.5			26.7	37	28.2					15.6	45 (46)
AS32□1FSG-03-07(S)A	1/4"	3/8	19	11.2	17.7	19	21.8	32.1	28.7	49.6	48.1	44.4	42.9	13.3	35 (36)
AS32□1FSG-03-09(S)A	5/16"			13.2			22.7	33						14.2	
AS32□1FSG-03-11(S)A	3/8"			15.5			26.7	37	28.2					15.6	36 (37)
AS42□1FSG-04-11(S)A	3/8"	1/2	24 (23.8)	15.5	19.7	24	27.4	40.3 (40.2)	36.2	58.5	57.0	51.4	49.9	15.6	59 (58)
AS42□1FSG-04-13(S)A	1/2"			19.3			30.9	43.8 (43.7)	34.7					17	61 (60)

*1 Reference dimensions
*2 Reference dimensions of threads after installation
* The values in ( ) are for NPT thread.

Dimensions: Universal Type

Seal method: Sealant
For R, NPT thread

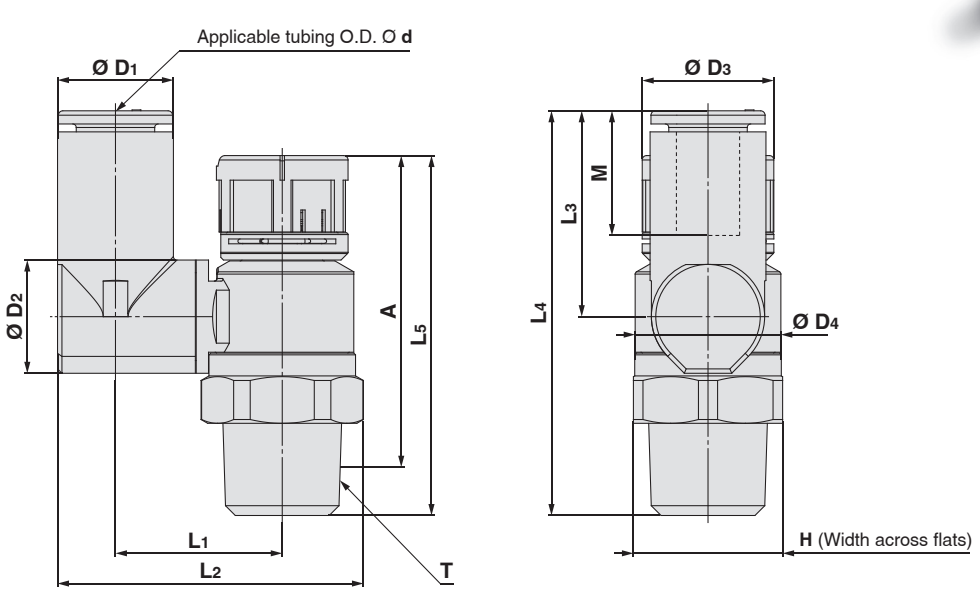

Metric Size

[mm]

Model	d	T	H	D1	D2	D3	D4	L1	L2	L3	L4	L5*1 Unlocked	L5*1 Locked	A*2 Unlocked	A*2 Locked	M	Weight [g]
AS23□1FSG-01-23(S)A	3.2	1/8	13 (12.7)	7.2	9.6	14	12.6	13.3	24	17.5	36	36.6	35.1	33.5	32.0	13	10 (10)
AS23□1FSG-01-04(S)A	4			8.2				13.9	25.1								
AS23□1FSG-01-06(S)A	6			10.4					26.2	20.4	38.8						11 (10)
AS23□1FSG-01-08(S)A	8			13.2	10.2			16.4	30.1	21.5	40					14.2	12 (11)
AS23□1FSG-02-04(S)A	4	1/4	17 (17.5)	8.2	12.9	15	16.6	16.5	29.9	17.5	40.1	43.3	41.8	37.8	36.3	13	20 (21)
AS23□1FSG-02-06(S)A	6			10.4				19	33.8	21.4	43.9					14.2	
AS23□1FSG-02-08(S)A	8			13.2					34.9	23.5	46					15.6	21 (22)
AS23□1FSG-02-10(S)A	10			15.9				20.9	38.1	24.7	47.3					17	22 (23)
AS33□1FSG-02-06(S)A	6	1/4	19	10.4	12.9	17.7	19	20.2	36	21.4	57.8	57.3	55.8	52.1	50.6	13	44 (45)
AS33□1FSG-02-08(S)A	8			13.2					37.1	23.5	59.9					14.2	
AS33□1FSG-02-10(S)A	10			15.9	17.4			23	41.2	26.1	82.5					15.6	35 (36)
AS33□1FSG-02-12(S)A	12			18.5					42.5	28.3	64.7					17	47 (48)
AS33□1FSG-03-06(S)A	6	3/8	19	10.4	12.9	17.7	19	20.2	36	21.4	50.1	49.6	48.1	44.4	42.9	13	35 (36)
AS33□1FSG-03-08(S)A	8			13.2					37.1	23.5	52.2					14.2	
AS33□1FSG-03-10(S)A	10			15.9	17.4			23	41.2	26.1	54.8					15.6	26 (27)
AS33□1FSG-03-12(S)A	12			18.5					42.5	28.3	57					17	38 (39)
AS43□1FSG-04-10(S)A	10	1/2	24 (23.8)	15.9	17.4	19.7	24	25.6	46.4	26.1	61.2	58.5	57.0	51.4	49.9	15.6	59 (58)
AS43□1FSG-04-12(S)A	12			18.5	21			26.2	48.3	28.3	63.4					17	61 (60)

*1 Reference dimensions
*2 Reference dimensions of threads after installation
* The values in ( ) are for NPT thread.

Dimensions: Universal Type

Seal method: Sealant
For R, NPT thread

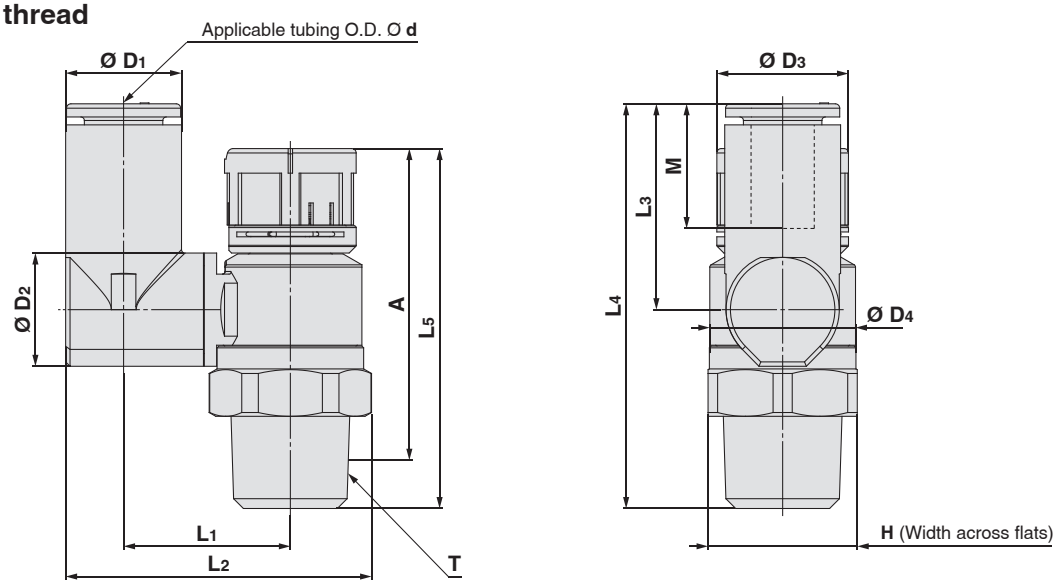

Inch Size

[mm]

Model	d	T	H	D1	D2	D3	D4	L1	L2	L3	L4	L5*1 Unlocked	L5*1 Locked	A*2 Unlocked	A*2 Locked	M	Weight [g]
AS23□1FSG-01-01(S)A	1/8"	1/8	13 (12.7)	7.2	9.6	14	12.6	13.3	24	17.5	36	36.6	35.1	33.5	32.0	13	10 (10)
AS23□1FSG-01-03(S)A	5/32"			8.2				13.9	25.1								
AS23□1FSG-01-07(S)A	1/4"			10.4					26.2	20.4	38.8					13.3	11 (10)
AS23□1FSG-01-09(S)A	5/16"			13.2	10.2			16.4	30.1	21.5	40					14.2	12 (11)
AS23□1FSG-02-03(S)A	5/32"	1/4	17 (17.5)	8.2	12.9	15	16.6	16.5	29.9	17.5	40.1	43.3	41.8	37.8	36.3	13.3	20 (21)
AS23□1FSG-02-07(S)A	1/4"			10.4				19	33.8	21.4	43.9						21 (21)
AS23□1FSG-02-09(S)A	5/16"			13.2					34.9	23.5	46					14.2	21 (22)
AS23□1FSG-02-11(S)A	3/8"			15.9				20.9	38.1	24.7	47.3					15.6	22 (23)
AS33□1FSG-02-07(S)A	1/4"	1/4	19	11.2	12.9	17.7	19	20.2	36	21.4	57.8	57.3	55.8	52.1	50.6	13.3	44 (45)
AS33□1FSG-02-09(S)A	5/16"			13.2					37.1	23.5	59.9					14.2	
AS33□1FSG-02-11(S)A	3/8"			15.9	17.4			23	41.2	26.1	82.5					15.6	45 (46)
AS33□1FSG-03-07(S)A	1/4"	3/8	19	11.2	12.9	17.7	19	20.2	36	21.4	50.1	49.6	48.1	44.4	42.9	13.3	35 (36)
AS33□1FSG-03-09(S)A	5/16"			13.2					37.1	23.5	52.2					14.2	
AS33□1FSG-03-11(S)A	3/8"			15.9	17.4			23	41.2	26.1	54.8					15.6	36 (37)
AS43□1FSG-04-11(S)A	3/8"	1/2	24 (23.8)	15.9	17.4	19.7	24	25.6	46.4	26.1	61.2	58.5	57.0	51.4	49.9	15.6	59 (58)
AS43□1FSG-04-13(S)A	1/2"			18.5	21			26.2	48.3	28.3	63.4					17	61 (60)

*1 Reference dimensions
*2 Reference dimensions of threads after installation
* The values in ( ) are for NPT thread.

Dimensions: Elbow Type

Seal method: Face seal
For G thread

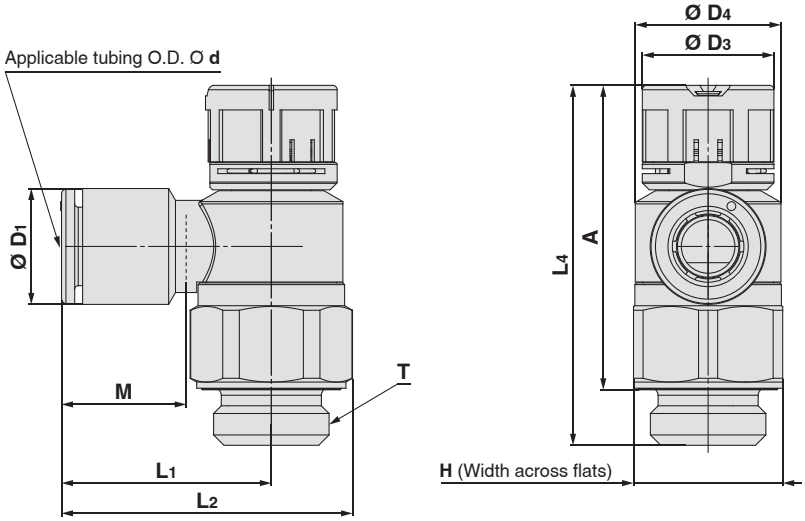

Metric Size

[mm]

Model	d	T	H	D_1	D_3	D_4	L_1	L_2	L_3	L_4*1		A*2		M	Weight [g]
										Unlocked	Locked	Unlocked	Locked		
AS22□1FSG-G01-23A	3.2	1/8	13	7.2	14	12.6	19.1	26.1	18.8	36.6	35.1	31.1	29.6	13	12
AS22□1FSG-G01-04A	4			8.2											
AS22□1FSG-G01-06A	6			10.4											
AS22□1FSG-G01-08A	8			13.2			22.4	29.4						14.2	13
AS22□1FSG-G01-10A	10			15.9			25.3	32.3						15.6	14
AS22□1FSG-G02-23A	3.2	1/4	17	7.2	15	16.6	20.9	30	22.6	43.1	41.6	36.6	35.1	13	23
AS22□1FSG-G02-04A	4			8.2											
AS22□1FSG-G02-06A	6			10.4			23.4	32.5							
AS22□1FSG-G02-08A	8			13.2			23.9	32.6						14.2	24
AS22□1FSG-G02-10A	10			15.9			26.9	36						15.6	25
AS32□1FSG-G02-06A	6	1/4	21	10.4	17.7	19	21.8	33	36.4	57.2	55.7	48.7	47.2	13.3	51
AS32□1FSG-G02-08A	8			13.2			22.7	33.9						14.2	
AS32□1FSG-G02-10A	10			15.9			26.7	37.9	35.7					15.6	53
AS32□1FSG-G02-12A	12			18.5			29.7	40.9	34.5					17	55
AS32□1FSG-G03-06A	6	3/8	21	10.4	17.7	19	21.8	33	28.7	49.5	48.0	42.0	40.5	13.3	41
AS32□1FSG-G03-08A	8			13.2			22.7	33.9						14.2	42
AS32□1FSG-G03-10A	10			15.9			26.7	37.9	28					15.6	43
AS32□1FSG-G03-12A	12			18.5			29.7	40.9	26.8					17	45
AS42□1FSG-G04-10A	10	1/2	27	15.9	19.7	24	27.4	41.8	36.2	58.4	56.9	49.4	47.9	15.6	75
AS42□1FSG-G04-12A	12			18.5			30.8	45.2	35.1					17	77
AS42□1FSG-G04-16A	16			23.8			34.8	49.2	32.7					20.6	81

*1 Reference dimensions *2 Reference dimensions of threads after installation

Dimensions: Universal Type

Seal method: Face seal
For G thread

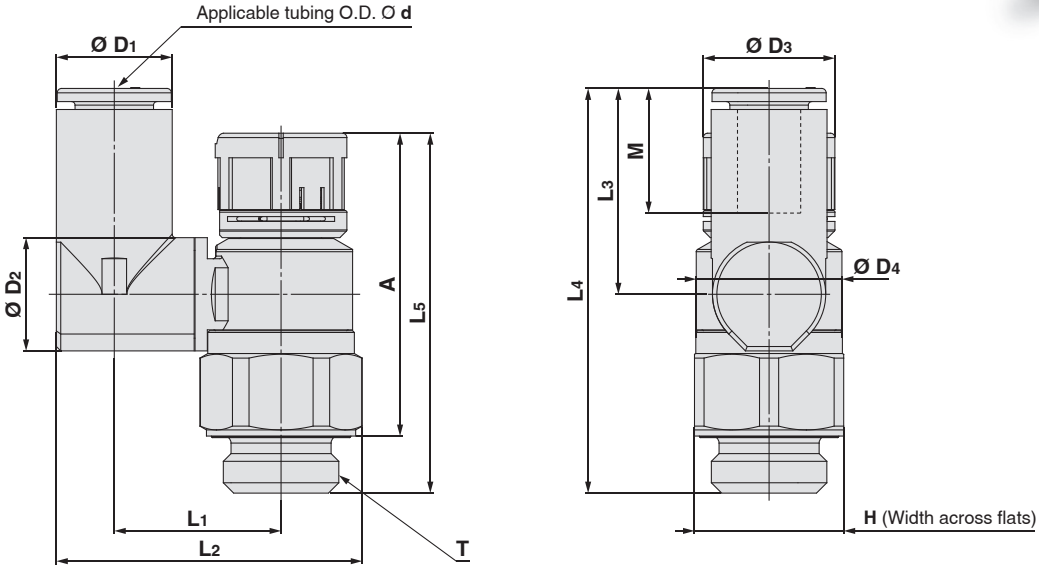

Metric Size

[mm]

Model	d	T	H	D_1	D_3	D_4	L_1	L_2	L_3	L_4	L_5*1		A*2		M	Weight [g]
											Unlocked	Locked	Unlocked	Locked		
AS23□1FSG-G01-23A	3.2	1/8	13	7.2	14	12.6	13.2	24	17.5	35.7	36.6	35.1	31.1	29.6	13	12
AS23□1FSG-G01-04A	4			8.2			13.9	25.1								
AS23□1FSG-G01-06A	6			10.4				26.2	20.4	38.5						
AS23□1FSG-G01-08A	8			13.2			16.4	30.1	21.5	39.7					14.2	13
AS23□1FSG-G02-04A	4	1/4	17	8.2	15	16.6	16.5	29.9	17.5	40.1	43.1	41.6	36.6	35.1	13.3	23
AS23□1FSG-G02-06A	6			10.4			19	33.8	21.4	43.9						
AS23□1FSG-G02-08A	8			13.2				34.9	23.5	46					14.2	24
AS23□1FSG-G02-10A	10			15.9			20.9	38.1	24.7	47.3					15.6	25
AS33□1FSG-G02-06A	6	1/4	21	10.4	17.7	19	20.2	36.1	21.4	57.8	57.2	55.7	48.7	47.2	13.3	51
AS33□1FSG-G02-08A	8			13.2				38	23.5	59.9					14.2	
AS33□1FSG-G02-10A	10			15.9			23	42.2	26.1	58					15.6	53
AS33□1FSG-G02-12A	12			18.5				43.5	28.3	59.9					17	55
AS33□1FSG-G03-06A	6	3/8	21	10.4	17.7	19	20.2	36.6	21.4	50.1	49.5	48.0	42.0	40.5	13.3	41
AS33□1FSG-G03-08A	8			13.2				38	23.5	52.2					14.2	42
AS33□1FSG-G03-10A	10			15.9			23	42.2	28.1	50.3					15.6	43
AS33□1FSG-G03-12A	12			18.5				43.5	28.3	52.2					17	45
AS43□1FSG-G04-10A	10	1/2	27	15.9	19.7	24	25.6	47.9	26.1	61.2	58.4	56.9	49.4	47.9	15.6	75
AS43□1FSG-G04-12A	12			18.5			26.2	49.8	28.3	63.4					17	77

*1 Reference dimensions *2 Reference dimensions of threads after installation

AS-FSGA Series
Made to Order

Please contact SMC for detailed dimensions, specifications and lead times.

1 Lubricant: Vaseline -X12

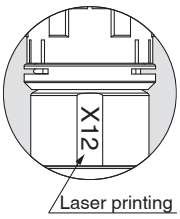

Example) AS2201FSG-01-04SA-X12

2 Grease-free (Seal: Fluorine-coated) + Restrictor (Without check valve) -X21

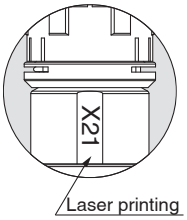

Example) AS2201FSG-01-04SA-X21

- Not particle-free
- Direction is not specified as there is no check valve. Products are available by the product number for meter-out type. Product number for meter-in type is not available.
- Only the needle and O-ring are fluorine-coated.
- The parts in contact with fluid are grease-free.

3 Restrictor (Without check valve) -X214

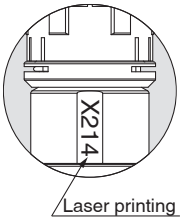

Example) AS2201FSG-01-04SA-X214

- Direction is not specified as there is no check valve. Products are available by the product number for meter-out type. Product number for meter-in type is not available.

4 Clean series 10-

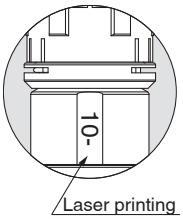

Example) 10-AS2201FSG-01-04SA

- Fluorine grease is used.
- The cleanliness class (ISO class) is 5.

AS-FSA Series
Specific Product Precautions 1

Be sure to read this before handling the products. Refer to the back cover for safety instructions. For flow control equipment precautions, refer to the "Handling Precautions for SMC Products" and the "Operation Manual" on the SMC website: https://www.smc.eu

Design and Selection

⚠ Warning

1. Check the specifications.

The products in this catalog are designed to be used in compressed air systems (including vacuum) only.
If the products are used in an environment where pressure or temperature is out of the specified range, damage and/or malfunction may result. Do not use under such conditions. (Refer to the specifications.)
Please contact SMC when using a fluid other than compressed air (including vacuum).
We do not guarantee against any damage if the product is used outside of the specification range.

2. The products in this catalog are not designed for the use as stop valve with zero air leakage.

A certain amount of leakage is allowed in the product's specifications.
Tightening the needle to reduce leakage to zero may result in equipment damage.

3. Do not disassemble the product or make any modifications, including additional machining.

It may cause human injury and/or an accident.

4. The flow rate characteristics for each product are representative values.

The flow rate characteristics are characteristics of each individual product. Actual values may differ depending on the piping, circuitry, pressure conditions, etc.

5. Sonic conductance (C) and critical pressure ratio (b) values for products are representative values.
The speed controller's controlled flow values are with the needle fully open and free flow with the needle fully closed.

6. Check if PTFE can be used in the application.

PTFE powder (Polytetrafluoroethylene resin) is included in the seal material of the male thread type piping taper thread. Confirm that the use of it will not cause any adverse effects on the system.
Please contact SMC if the Safety Data Sheet (SDS) is required.

7. Speed controllers are designed to control the speed of the actuator.

When it is used for adjusting the flow rate of the air blow, use a restrictor without a check valve function (X214 or X21).

Mounting

⚠ Warning

1. Operation Manual

Install the products and operate them only after reading the Operation Manual carefully and understanding its contents. Also, keep the Operation Manual where it can be referred to as necessary.

2. Ensure sufficient space for maintenance activities.

When installing the products, allow access for maintenance.

3. Tighten threads with the proper tightening torque.

When installing the products, follow the listed proper torque.

Mounting

⚠ Warning

4. After pushing the knob down to lock, confirm that it is locked.

It should not be possible to rotate the knob to the right or to the left. If the knob is pulled with force, it may break. Do not pull the knob with excessive force.

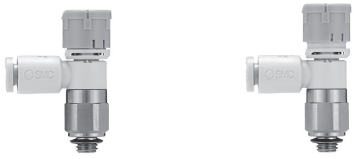

Locked **Unlocked**

5. Slowly turn the knob in the opening direction or closing direction.
(Guide for rotation speed: 1 [rev/sec] or below)

Connection thread size	Guide for rotation speed [rev/sec]
M5	1 or less
1/8	1 or less
1/4	0.9 or less
3/8	0.7 or less
1/2	0.7 or less

If quick reciprocal operations between two graduations like 0 → 1 → 0 , which is not conducted in usual flow rate setting, are conducted, a scale malfunctioning may occur.

6 . Do not turn the knob forcibly to prevent the scale from going outside the scale display range.

The scale may indicate a wrong value, possibly leading to a wrong setting.
Wrong use example: While the scale indication range is 0 to 8 , forcefully turning the knob in the opening direction from graduation 8 caused the scale to indicate 0.

Connection thread size	Scale indication range
M5	0 to 8 graduations
1/8, 1/4, 3/8, 1/2	0 to 10 graduations

The scale indication range is also printed on the product.

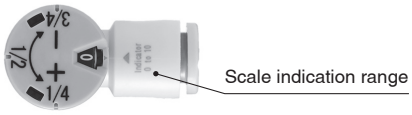

7. Do not use tools such as pliers to rotate the knob.

It can cause idle rotation of the knob or damage.

8. Verify the air flow direction.

Mounting backward is dangerous, because the speed adjustment needle will not work and the actuator may lurch suddenly.

9. Adjust the speed by opening the needle slowly from the fully closed state.

Loose needle valves may cause unexpected sudden actuator lurching. When a needle valve is turned clockwise, it is closed and actuator speed decreases. When a needle valve is turned counterclockwise, it is open and actuator speed increases.

10. Do not apply excessive force or shock to the body, indicator part, or fittings with an impact tool.

It can cause damage or air leakage.

11. Refer to the Fittings and Tubing Precautions on the SMC website for handling One-touch fittings.

12. Tubing O.D. Ø 2

Tubing other than that from SMC cannot be used because it may result in the inability to connect the tube, air leakage after connecting the tube, or disconnection of the tube.

AS-FSA Series
Specific Product Precautions 2

Be sure to read this before handling the products. Refer to the back cover for safety instructions. For flow control equipment precautions, refer to the "Handling Precautions for SMC Products" and the "Operation Manual" on the SMC website: https://www.smc.eu

Mounting

⚠ Warning

13. To install/remove the product, use an appropriate wrench to tighten/loosen at the supplied nut on body B.

Do not apply torque at other points, as the product may be damaged. Rotate body A manually for positioning after installation.

14. Do not use body A and/or elbow body for applications involving continuous rotation.

Body A and the fitting section may be damaged.

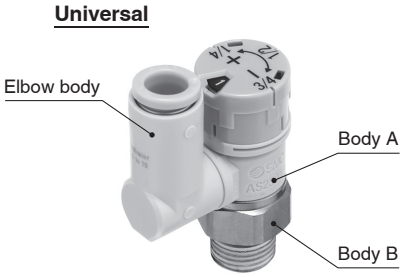

⚠ Caution

For M5, 10-32UNF

Tightening method

First, tighten it by hand, then give it an additional 1/6 turn to 1/4 turn with a wrench. The reference value for the tightening torque is 1 to 1.5 N·m.

∗ Excessive tightening may damage the thread portion or deform the gasket and cause air leakage.
If the screw is too shallowly screwed in, it may come loose or air may leak.

Chamfered area for female thread

1 . In compliance with ISO 1 6 0 3 0 Standards (air pressure fluid dynamics – connection – ports and stud ends), the chamfered thread sizes shown below are recommended.

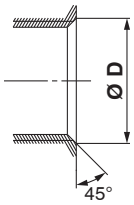

Connection thread size	Chamfer dimension Ø **D** (Recommended value)
M5	5.1 to 5.4
10-32UNF	5.0 to 5.3

⚠ Caution

For R, NPT Thread (With sealant)

Tightening method

1 . The proper tightening torques of the fittings are as shown in the table below.
As a guide, tighten it by hand, then turn it two or three turns with a wrench.
Check the dimensions of each product for the hexagon width across flats.

Connection thread size	Proper tightening torque [N·m]
NPT, R1/8	3 to 5
NPT, R1/4	8 to 12
NPT, R3/8	15 to 20
NPT, R1/2	20 to 25

Chamfered area for female thread

By chamfering as shown in the following table, machining of threads is easier and effective for burr prevention.

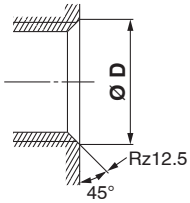

Connection thread size	Chamfer dimension Ø **D** (Recommended value)	
	Rc	NPT, NPTF
1/8	10.2 to 10.4	10.5 to 10.7
1/4	13.6 to 13.8	14.1 to 14.3
3/8	17.1 to 17.3	17.4 to 17.6
1/2	21.4 to 21.6	21.7 to 21.9

∗ For Uni thread, Rz 12.5 is necessary for sealing at the chamfered part.

For G Thread (Face seal)

Tightening method

When using a connection thread, perform tightening to the appropriate tightening torque as shown below.
As a guide, tighten it by hand, then turn it two or three turns with a wrench.
Check the tool by referring to the dimension table of each product.

Connection thread size	Proper tightening torque [N·m]
G1/8	3 to 5
G1/4	8 to 12
G3/8	15 to 20
G1/2	20 to 25

Chamfered area for female thread (Recommended value)

1 . Conforming to ISO 1 6 0 3 0 - 2 0 0 1 , the chamfered dimensions shown in the table below are recommended. By chamfering as shown in the table below, machining of threads is easier and effective for burr prevention.

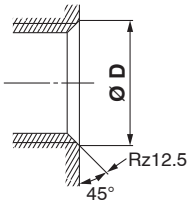

Connection thread size	Chamfer dimension Ø **D**	
	Min.	Max.
1/8	9.8	10.2
1/4	13.3	13.7
3/8	16.8	17.2
1/2	21.0	21.4

2. Use G external threads with G internal threads.

AS-FSA Series
Specific Product Precautions 3

Be sure to read this before handling the products. Refer to the back cover for safety instructions. For flow control equipment precautions, refer to the "Handling Precautions for SMC Products" and the "Operation Manual" on the SMC website: https://www.smc.eu

Mounting

⚠ Caution

1. This product has a stopper for fully close in rotating direction. Excess torque may break the stopper. Table below shows the max. allowable torque of the knob.

Connection thread size	Max. allowable torque [N·m]
M5	0.05
1/8	0.07
1/4	0.16
3/8	0.2
1/2	0.4

When performing the piping work, turn the tightening tool in the horizontal direction to the hexagon across flats of the body B so that any moment is not applied to the body A. If the tool is in contact with the body A, this may cause the body B to come off.

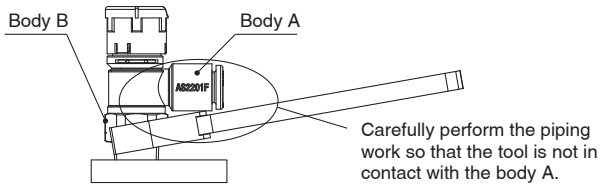

2 . Actuator speed needs to be checked each time the setting is changed.

Individual product difference due to tolerance of the components, individual actuator difference, operating conditions and temperature, etc. may cause a large variation in the actuator speed, and for this reason, the final actuator speed needs to be checked every time the setting is changed.

3 . Force for lifting the knob is specified as shown in the table below.

Larger lifting force than specified in the table below will cause removal of the knob, flow rate not according to the flow rate characteristics curve, incorrect flow indication with the indicator or damage to the product.

Connection thread size	Knob lifting force
M5 10/32-UNF	1 to 1.5 N
1/8, 1/4, 3/8, 1/2	3.5 to 4 N

4 . When a torque is applied to the knob or spacer with the knob lock engaged, an erroneous operation or breakage of the scale may occur. Perform mounting by hooking a wrench to the hexagonal part.

Reference Point

Refer to the following for details on the reference point (scale zero point) of this product.

Elbow type

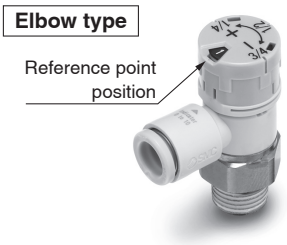

Universal type

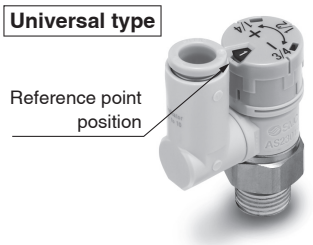

Piping Threads with Sealant

⚠ Caution

1. If the fitting is tightened with excessive torque, a large amount of sealant will seep out. Remove the excess sealant.

2. Insufficient tightening may loosen the threads or cause air leakage.

3. For reuse

1) Normally, fittings with a sealant can be reused up to 2 to 3 times.
2) To prevent air leakage through the sealant, remove any loose sealant stuck to the fitting by blowing air over the threaded portion.
3) If the sealant no longer provides effective sealing, wind sealant tape over the sealant before reusing. Do not use any form other than the tape type of sealant.

4. Once the fitting has been tightened, backing it out to its original position often causes the sealant to become defective. Air leakage will occur.

5. Use R external threads with Rc internal threads and NPT external threads with NPT internal threads.

Piping

⚠ Caution

1. Refer to the Fittings and Tubing Precautions on the SMC website for handling One-touch fittings.

2. Preparation before piping

Before piping is connected, it should be thoroughly blown out with air (flushing) or washed to remove chips, cutting oil, and other debris from inside the pipe.

3. Winding of sealant tape

When screwing piping or fittings into ports, ensure that chips from the pipe threads or sealing material do not enter the piping. Also, if sealant tape is used, leave 1 thread ridge exposed at the end of the threads.

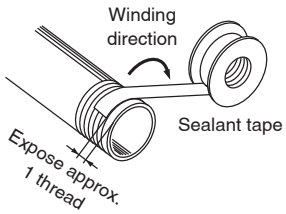

⚠ Safety Instructions

These safety instructions are intended to prevent hazardous situations and/or equipment damage. These instructions indicate the level of potential hazard with the labels of **"Caution," "Warning"** or **"Danger."** They are all important notes for safety and must be followed in addition to International Standards (ISO/IEC) [1], and other safety regulations.

⚠ **Caution:**	**Caution** indicates a hazard with a low level of risk which, if not avoided, could result in minor or moderate injury.
⚠ **Warning:**	**Warning** indicates a hazard with a medium level of risk which, if not avoided, could result in death or serious injury.
⚠ **Danger:**	**Danger** indicates a hazard with a high level of risk which, if not avoided, will result in death or serious injury.

1) ISO 4414: Pneumatic fluid power – General rules relating to systems.
ISO 4413: Hydraulic fluid power – General rules relating to systems.
IEC 60204-1: Safety of machinery – Electrical equipment of machines. (Part 1: General requirements)
ISO 10218-1: Manipulating industrial robots - Safety.
etc.

⚠ Warning

1. **The compatibility of the product is the responsibility of the person who designs the equipment or decides its specifications.**
   Since the product specified here is used under various operating conditions, its compatibility with specific equipment must be decided by the person who designs the equipment or decides its specifications based on necessary analysis and test results. The expected performance and safety assurance of the equipment will be the responsibility of the person who has determined its compatibility with the product. This person should also continuously review all specifications of the product referring to its latest catalogue information, with a view to giving due consideration to any possibility of equipment failure when configuring the equipment.

2. **Only personnel with appropriate training should operate machinery and equipment.**
   The product specified here may become unsafe if handled incorrectly. The assembly, operation and maintenance of machines or equipment including our products must be performed by an operator who is appropriately trained and experienced.

3. **Do not service or attempt to remove product and machinery/equipment until safety is confirmed.**
   1. The inspection and maintenance of machinery/equipment should only be performed after measures to prevent falling or runaway of the driven objects have been confirmed.
   2. When the product is to be removed, confirm that the safety measures as mentioned above are implemented and the power from any appropriate source is cut, and read and understand the specific product precautions of all relevant products carefully.
   3. Before machinery/equipment is restarted, take measures to prevent unexpected operation and malfunction.

4. **Contact SMC beforehand and take special consideration of safety measures if the product is to be used in any of the following conditions.**
   1. Conditions and environments outside of the given specifications, or use outdoors or in a place exposed to direct sunlight.
   2. Installation on equipment in conjunction with atomic energy, railways, air navigation, space, shipping, vehicles, military, medical treatment, combustion and recreation, or equipment in contact with food and beverages, emergency stop circuits, clutch and brake circuits in press applications, safety equipment or other applications unsuitable for the standard specifications described in the product catalogue.
   3. An application which could have negative effects on people, property, or animals requiring special safety analysis.
   4. Use in an interlock circuit, which requires the provision of double interlock for possible failure by using a mechanical protective function, and periodical checks to confirm proper operation.

⚠ Caution

1. **The product is provided for use in manufacturing industries.**
   The product herein described is basically provided for peaceful use in manufacturing industries.
   If considering using the product in other industries, consult SMC beforehand and exchange specifications or a contract if necessary.
   If anything is unclear, contact your nearest sales branch.

Limited warranty and Disclaimer/Compliance Requirements

The product used is subject to the following "Limited warranty and Disclaimer" and "Compliance Requirements".Read and accept them before using the product.

Limited warranty and Disclaimer

1. The warranty period of the product is 1 year in service or 1.5 years after the product is delivered, whichever is first. [2] Also, the product may have specified durability, running distance or replacement parts. Please consult your nearest sales branch.
2. For any failure or damage reported within the warranty period which is clearly our responsibility, a replacement product or necessary parts will be provided. This limited warranty applies only to our product independently, and not to any other damage incurred due to the failure of the product.
3. Prior to using SMC products, please read and understand the warranty terms and disclaimers noted in the specified catalogue for the particular products.

2) Vacuum pads are excluded from this 1 year warranty.
A vacuum pad is a consumable part, so it is warranted for a year after it is delivered. Also, even within the warranty period, the wear of a product due to the use of the vacuum pad or failure due to the deterioration of rubber material are not covered by the limited warranty.

Compliance Requirements

1. The use of SMC products with production equipment for the manufacture of weapons of mass destruction (WMD) or any other weapon is strictly prohibited.
2. The exports of SMC products or technology from one country to another are governed by the relevant security laws and regulations of the countries involved in the transaction. Prior to the shipment of a SMC product to another country, assure that all local rules governing that export are known and followed.

⚠ Caution

SMC products are not intended for use as instruments for legal metrology.
Measurement instruments that SMC manufactures or sells have not been qualified by type approval tests relevant to the metrology (measurement) laws of each country.
Therefore, SMC products cannot be used for business or certification ordained by the metrology (measurement) laws of each country.

SMC Corporation (Europe)

Austria	+43 (0)2262622800	www.smc.at	office@smc.at
Belgium	+32 (0)33551464	www.smc.be	info@smc.be
Bulgaria	+359 (0)2807670	www.smc.bg	office@smc.bg
Croatia	+385 (0)13707288	www.smc.hr	office@smc.hr
Czech Republic	+420 541424611	www.smc.cz	office@smc.cz
Denmark	+45 70252900	www.smcdk.com	smc@smcdk.com
Estonia	+372 651 0370	www.smcee.ee	info@smcee.ee
Finland	+358 207513513	www.smc.fi	smcfi@smc.fi
France	+33 (0)164761000	www.smc-france.fr	supportclient@smc-france.fr
Germany	+49 (0)61034020	www.smc.de	info@smc.de
Greece	+30 210 2717265	www.smchellas.gr	sales@smchellas.gr
Hungary	+36 23513000	www.smc.hu	office@smc.hu
Ireland	+353 (0)14039000	www.smcautomation.ie	sales@smcautomation.ie
Italy	+39 03990691	www.smcitalia.it	mailbox@smcitalia.it
Latvia	+371 67817700	www.smc.lv	info@smc.lv
Lithuania	+370 5 2308118	www.smclt.lt	info@smclt.lt
Netherlands	+31 (0)205318888	www.smc.nl	info@smc.nl
Norway	+47 67129020	www.smc-norge.no	post@smc-norge.no
Poland	+48 222119600	www.smc.pl	office@smc.pl
Portugal	+351 214724500	www.smc.eu	apoioclientept@smc.smces.es
Romania	+40 213205111	www.smcromania.ro	smcromania@smcromania.ro
Russia	+7 (812)3036600	www.smc.eu	sales@smcru.com
Slovakia	+421 (0)413213212	www.smc.sk	office@smc.sk
Slovenia	+386 (0)73885412	www.smc.si	office@smc.si
Spain	+34 945184100	www.smc.eu	post@smc.smces.es
Sweden	+46 (0)86031240	www.smc.nu	smc@smc.nu
Switzerland	+41 (0)523963131	www.smc.ch	info@smc.ch
Turkey	+90 212 489 0 440	www.smcturkey.com.tr	satis@smcturkey.com.tr
UK	+44 (0)845 121 5122	www.smc.uk	sales@smc.uk
South Africa	+27 10 900 1233	www.smcza.co.za	zasales@smcza.co.za

Printing BQ 00 Printed in Spain

Specifications are subject to change without prior notice and any obligation on the part of the manufacturer