Compact Cylinder

RoHS

ø4, ø6, ø10, ø12, ø16, ø20, ø25, ø32, ø40, ø50, ø63, ø80, ø100, ø125, ø140, ø160, ø180, ø200

ø4 to ø200 lineup

New Sizes ø4, ø6, and ø10 have been added.

Equipment Downsizing

For more compact attachments and spaces

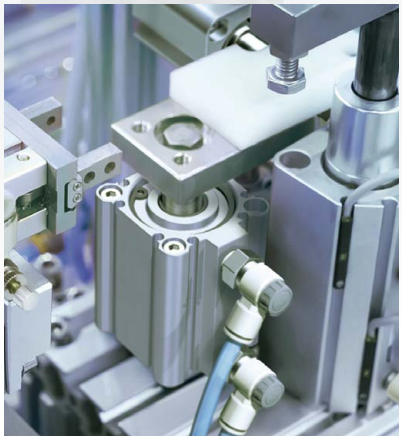

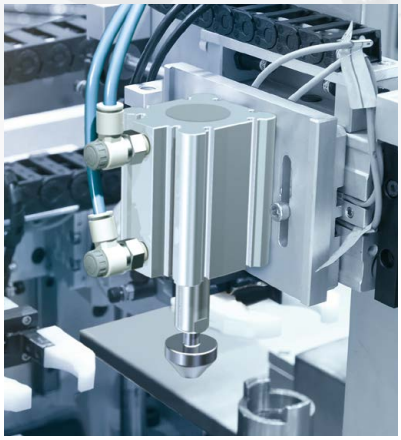

CQ2 Series

SMC

CAT.ES20-205D

Variations

Series	Action	Model	Bore size [mm] 4	6	10	12	16	20	25	32	40	50	63	80	100	125	140	160	180	200	Standard stroke [mm]	Page
Standard **CQ2**	Double acting	Single rod	●	●	●																ø4, ø6: 5, 10 ø10: 5 to 20	7
						●	●	●	●	●	●	●	●	●	●						ø12, ø16: 5 to 30 ø20, ø25: 5 to 50 ø32, ø40: 5 to 100 ø50 to ø100: 10 to 100	15
	Double acting	Double rod				●	●	●	●	●	●	●	●	●	●						ø12, ø16: 5 to 30 ø20, ø25: 5 to 50 ø32, ø40: 5 to 100 ø50 to ø100: 10 to 100	37
	Single acting	Single rod (Spring return/ extend)				●	●	●	●	●	●	●									ø12 to ø40: 5, 10 ø50: 10, 20	51
With stable lubrication function (Lube-retainer) **CQ2□M**	Double acting	Single rod								●	●	●	●	●	●						ø32, ø40: 5 to 100 ø50 to ø100: 10 to 100	24
Large bore size **CQ2**	Double acting	Single rod														●	●	●	●	●	10 to 300	61
	Double acting	Double rod														●	●	●	●	●	10 to 300	67
Anti-lateral load **CQ2□S**	Double acting	Single rod								●	●	●	●	●	●						ø32 to ø40: 5 to 100 ø50 to ø100: 10 to 100	73
Long stroke **CQ2**	Double acting	Single rod								●	●	●	●	●	●						125 to 300	80
Non-rotating rod **CQ2K**	Double acting	Single rod				●	●	●	●	●	●	●	●								ø12, ø16: 5 to 30 ø20, ø25: 5 to 50 ø32, ø40: 5 to 100 ø50, ø63: 10 to 100	85
	Double acting	Double rod				●	●	●	●	●	●	●	●								ø12, ø16: 5 to 30 ø20, ø25: 5 to 50 ø32, ø40: 5 to 100 ø50, ø63: 10 to 100	97
Water resistant **CQ2□$^{R}_{V}$**	Double acting	Single rod						●	●	●	●	●	●	●	●						ø20, ø25: 5 to 50 ø32, ø40: 5 to 100 ø50 to ø100: 10 to 100	107
	Double acting	Double rod									●	●	●	●	●						ø40: 5 to 100 ø50 to ø100: 10 to 100	116
Axial piping **CQP2**	Double acting	Single rod				●	●	●	●	●	●	●	●	●	●						ø12, ø16: 5 to 30 ø20, ø25: 5 to 50 ø32, ø40: 5 to 100 ø50 to ø100: 10 to 100	123
	Single acting	Single rod (Spring return/ extend)				●	●	●	●	●	●	●									ø12 to ø40: 5, 10 ø50: 10, 20	130
With end lock **CBQ2**	Double acting	Single rod						●	●	●	●	●	●	●	●						ø20 to ø63: 10 to 100 ø80, ø100: 25 to 100	139
			4	6	10	12	16	20	25	32	40	50	63	80	100	125	140	160	180	200		

Simple specials	169
Made to order common specifications	173

Secondary battery compatible
25A-CQ2

Clean series/Low particle generation
10-/21-/11-/22-CQ2

Smooth Cylinder (Low friction)
CQ2Y

Low-speed Cylinder
CQ2X

Refer to the **Web Catalog.**

∗ The axial piping type, end lock cylinders, and low-speed cylinders have the same body shapes as those of the existing products.

New Sizes ø4, ø6, and ø10 have been added.

Compact
Lightweight: 8.6 g

∗ For ø4, 5 mm stroke

Same-surface piping and auto switch mounting
No protrusion from the body

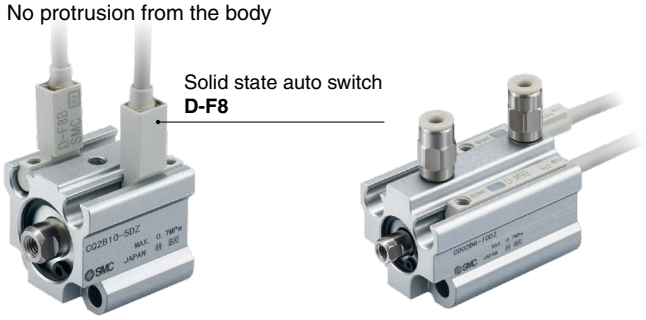

∗ For ø10, 5 mm stroke

∗ For ø6, 10 mm stroke

Short pitch mounting is possible.

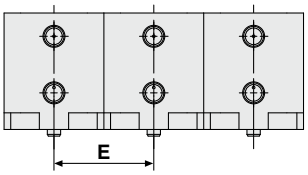

Pitch Dimensions [mm]

Bore size	E	
	Without magnet	With magnet
4	15	—
6	19	24
10	21	26

Rod End Types/Brackets

Rod end female thread

Simple joint A

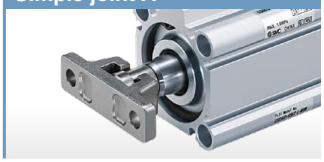

Simple joint B

Rod end male thread

Single knuckle joint

Double knuckle joint

Mounting Brackets

Rod flange

Head flange

Foot

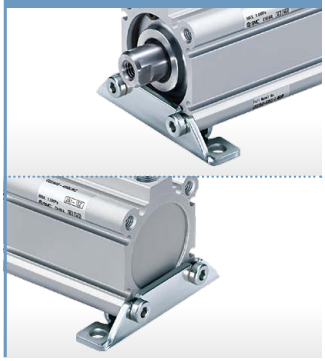

Compact foot

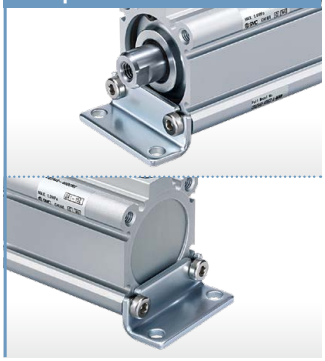

Clevis

Double clevis pivot bracket

Large bore size Single rod/Double rod CQ2 Series

Weight: Max. 30% lighter

6.18 Kg ➡ **4.33 Kg** For ø125, 50 mm stroke

The material of both ends of the cover has been changed. (Iron➡Aluminum alloy)

Environmentally Resistant Specifications

SMC offers a wide range of models suitable for various applications and operating environments.
This includes models that can be used in environments that the basic model cannot, such as those where coolant liquid, water droplets/splashing, dust, etc., are present. When using in environments where the above are present, it is possible to improve the service life of the product by selecting a model ideal for use in such environments.

➡For details, refer to the **Web Catalog**.

Dust Resistant

Cylinder with Stable Lubrication Function (Lube-retainer)
- Micro-powder environments (10 to 100 μm)

Dust-resistant Actuator (-XC92)
- For use in environments with airborne micro-powder such as ceramic powder, toner powder, paper powder, and metallic powder

With Heavy Duty Scraper (-XC4)
With Coil Scraper (-XC35)
- For use in dusty environments or in environments where die-cast equipment, construction machinery, etc., cause exposure to dirt or sand

Water Resistant

Water-resistant Cylinder

Corrosion Resistant (Stainless Steel)

Rod, Retaining Ring, Rod End Nut Made of Stainless Steel (-XC6)
Double Clevis and Double Knuckle Joint Pins Made of Stainless Steel (-XC27)
Rod End Bracket Made of Stainless Steel
- Single knuckle joint
- Double knuckle joint
- Rod end nut

Temperature Measures

Heat Resistant/Cold Resistant (-XB6, -XB7, -XB14)

CONTENTS

Compact Cylinder *CQ2 Series*

Standard: Double Acting, Single Rod CQ2 Series (ø4, ø6, ø10)
How to Order ..... p. 7
Specifications ..... p. 8
Weight ..... p. 8
Through-hole Type Mounting Bolt for the CQ2 ..... p. 10
Construction ..... p. 11
Dimensions ..... p. 12

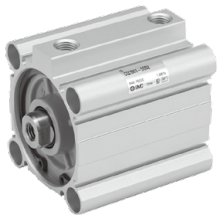

Standard: Double Acting, Single Rod CQ2 Series (ø12 to ø100)
How to Order ..... p. 15
Specifications ..... p. 17
Weight ..... p. 20
Through-hole Type Mounting Bolt for the CQ2 ..... p. 21
Construction ..... p. 23
Dimensions ..... p. 25
Accessory Brackets ..... p. 29

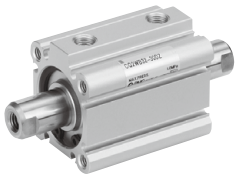

Standard: Double Acting, Double Rod CQ2W Series (ø12 to ø100)
How to Order ..... p. 37
Specifications ..... p. 39
Weight ..... p. 41
Through-hole Type Mounting Bolt for the CQ2W ..... p. 42
Construction ..... p. 43
Dimensions ..... p. 44
Accessory Brackets ..... p. 48

Standard: Single Acting, Single Rod CQ2 Series (ø12 to ø50)
How to Order ..... p. 51
Specifications ..... p. 53
Weight ..... p. 55
Through-hole Type Mounting Bolt for the CQ2 ..... p. 56
Construction ..... p. 57
Dimensions ..... p. 58

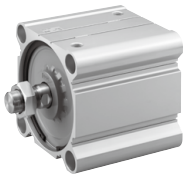

Large Bore Size: Double Acting, Single Rod CQ2 Series (ø125 to ø200)
How to Order ..... p. 61
Specifications ..... p. 62
Weight ..... p. 64
Through-hole Type Mounting Bolt for the CQ2 ..... p. 64
Construction ..... p. 65
Dimensions ..... p. 66

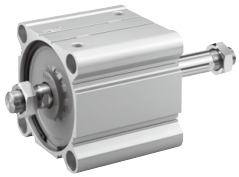

Large Bore Size: Double Acting, Double Rod CQ2W Series (ø125 to ø200)
How to Order ..... p. 67
Specifications ..... p. 68
Weight ..... p. 70
Through-hole Type Mounting Bolt for the CQ2W ..... p. 70
Construction ..... p. 71
Dimensions ..... p. 72

Anti-lateral Load: Double Acting, Single Rod CQ2□S Series (ø32 to ø100)
How to Order ..... p. 73
Specifications ..... p. 75
Weight ..... p. 76
Through-hole Type Mounting Bolt for the CQ2□S ..... p. 77
Construction ..... p. 78
Dimensions ..... p. 79

Long Stroke: Double Acting, Single Rod CQ2 Series (ø32 to ø100)

How to Order ..... p. 80
Specifications ..... p. 81
Weight ..... p. 82
Construction ..... p. 83
Dimensions ..... p. 84

Non-rotating Rod: Double Acting, Single Rod CQ2K Series (ø12 to ø63)

How to Order ..... p. 85
Specifications ..... p. 87
Weight ..... p. 88
Through-hole Type Mounting Bolt for the CQ2K ..... p. 89
Construction ..... p. 91
Dimensions ..... p. 92

Non-rotating Rod: Double Acting, Double Rod CQ2KW Series (ø12 to ø63)

How to Order ..... p. 97
Specifications ..... p. 99
Weight ..... p. 100
Through-hole Type Mounting Bolt for the CQ2KW ..... p. 101
Construction ..... p. 103
Dimensions ..... p. 104

Water Resistant: Double Acting, Single Rod CQ2-R/V Series (ø20 to ø100)

How to Order ..... p. 107
Specifications ..... p. 108
Weight ..... p. 109
Through-hole Type Mounting Bolt for the CQ2 ..... p. 110
Construction ..... p. 111
Dimensions ..... p. 112

Water Resistant: Double Acting, Double Rod CQ2W-R/V Series (ø40 to ø100)

How to Order ..... p. 116
Specifications ..... p. 117
Weight ..... p. 118
Through-hole Type Mounting Bolt for the CQ2W ..... p. 119
Construction ..... p. 120
Dimensions ..... p. 121

Axial Piping: Double Acting, Single Rod CQP2 Series (ø12 to ø100)

How to Order ..... p. 123
Specifications ..... p. 125
Weight ..... p. 126
Through-hole Type Mounting Bolt for the CQP2 ..... p. 127
Construction ..... p. 128
Dimensions ..... p. 129

Axial Piping: Single Acting, Single Rod CQP2 Series (ø12 to ø50)

How to Order ..... p. 130
Specifications ..... p. 131
Weight ..... p. 133
Through-hole Type Mounting Bolt for the CQP2 ..... p. 134
Construction ..... p. 135
Dimensions ..... p. 136

With End Lock: Double Acting, Single Rod CBQ2 Series (ø20 to ø100)

How to Order ..... p. 139
Specifications ..... p. 141
Weight ..... p. 142
Through-hole Type Mounting Bolt for the CBQ2 ..... p. 143
Construction ..... p. 145
Dimensions ..... p. 147

Auto Switch Mounting ..... p. 149
Simple Specials/Made to Order Common Specifications ..... p. 167
Specific Product Precautions ..... p. 197
Safety Instructions ..... Back cover

Combinations of Standard Products and Made to Order

CQ2 Series

●: Standard
◎: Made to order
○: Special product
—: Not available

Symbol	Specifications	Applicable bore size	CQ2 (Standard) Double acting Single rod	CQ2 (Standard) Double acting Double rod	CQ2 (Standard) Single acting Single rod/Spring return	CQ2 (Standard) Single acting Single rod/Spring extend	CQ2 (Large bore size) Double acting Single rod	CQ2 (Large bore size) Double acting Double rod
			ø4 to ø10	ø12 to ø100	ø12 to ø50		ø125 to ø200	
Standard	Standard	ø4 to ø10	●	—	—	—	—	—	—
		ø12 to ø100	—	●	●	●	●	●	●
D	Built-in magnet	ø4 to ø10	●*15	—	—	—	—	—	—
		ø12 to ø100	—	●	●	●	●	●	●
CQ2□H	Air-hydro type*13	ø20 to ø100	—	●	●	—	—	○	○
10-, 11-	Clean series/Low particle generation	ø12 to ø200	—	●	○	○	○	○	○
25A	Copper (Cu) and zinc (Zn)-free*12		—	●	●	○	○	●	○
20-	Copper*11 and Fluorine-free		—	●	●	●	●	●	●
CQ2□M	Compact cylinder with stable lubrication function (Lube-retainer)*6	ø32 to ø100	—	●	○	○	○	—	—
XB6	Heat-resistant cylinder (–10 to 150°C)*14	ø12 to ø100	—	◎	◎	○	○	○	○
XB7	Cold-resistant cylinder (–40 to 70°C)	ø12 to ø40	—	◎	◎	○	○	○	○
XB9	Low-speed cylinder (10 to 50 mm/s)	ø12 to ø100	—	◎	◎	○	○	○	○
XB10	Intermediate stroke (Exclusive body type)	ø12 to ø200	—	◎	◎	◎	○	◎	◎
XB13	Low-speed cylinder (5 to 50 mm/s)	ø12 to ø100	—	◎	◎	○	○	○	○
XB14	Cylinder with heat-resistant auto switch*14	ø16 to ø63	—	◎	○	○	○	○	○
XC2(A)	Rod end length increased by 10 mm (For foot and flange bracket)	ø12 to ø100	—	◎	◎	◎	◎	—	—
XC4	With heavy duty scraper	ø20 to ø100	—	◎	◎*3	○	○	○	○
XC6(A)	Piston rod/Retaining ring/Rod end nut material: Stainless steel	ø12 to ø100	—	◎	◎	◎	◎	○	○
XC8	Adjustable stroke cylinder/Adjustable extension type		—	◎	—	○	○	○	—
XC9	Adjustable stroke cylinder/Adjustable retraction type		—	◎	—	○	○	○	—
XC10	Dual stroke cylinder/Double rod type		—	◎	—	○	○	○	—
XC11	Dual stroke cylinder/Single rod type		—	◎	—	○	○	○	—
XC26	With split pins for double clevis pin/double knuckle joint pin and flat washers		—	◎	—	◎	◎	○	○
XC26□	Double clevis width/Double knuckle width 12.5 mm, 16.5 mm, or 19.5 mm: With double clevis and double knuckle joint		—	◎	—	○	○	○	—
XC27	Double clevis pin/Double knuckle joint pin material: Stainless steel 304		—	◎	○	◎	◎	○	○
XC35	With coil scraper	ø32 to ø100	—	◎	◎	○	○	○	○
XC36	With boss on rod end	ø12 to ø100	—	◎	◎	◎	◎	○	○
XC85	Grease for food processing equipment	ø12 to ø200	—	◎	◎	◎	◎	◎	◎
XC88	Spatter-resistant coil scraper, Lube-retainer, Grease for welding (Piston rod: Stainless steel 304)	ø32 to ø100	—	◎	○	○	○	○	○
XC89	Spatter-resistant coil scraper, Lube-retainer, Grease for welding (Piston rod: S45C)		—	◎	○	○	○	○	○
XC91	Spatter-resistant coil scraper, Grease for welding (Piston rod: S45C)		—	◎	○	○	○	○	○
XC92	Dust-resistant actuator		—	◎	○	○	○	○	○
X144	Special port location	ø12 to ø25	—	◎	◎	◎	◎	—	—
X235	Special rod end for double rod cylinder	ø12 to ø200	—	—	◎	—	—	—	◎
X271	Fluororubber seals*14	ø12 to ø160	—	◎	◎	◎	◎	◎*9	◎*9
X525	Long stroke for adjustable extension stroke cylinder (-XC8)	ø12 to ø100	—	◎	—	○	○	○	—
X526	Long stroke for adjustable retraction stroke cylinder (-XC9)		—	◎	—	○	○	○	—
X633	Intermediate stroke for double rod cylinder	ø12 to ø200	—	—	◎	—	—	—	◎
X636	Long stroke for dual stroke single rod cylinder	ø12 to ø100	—	◎	—	○	—	○	—
X1876	Cylinder tube: With concave boss on head end	ø32 to ø100	—	◎	—	◎	◎	—	—

*1 ø12 to ø32: (○), for ø40 to ø63 only
*2 ø12: (—)
*3 ø20 to ø32: (○), for ø40 to ø100 only
*4 ø20 to ø25: (○), for ø32 to ø100 only
*5 Rod end lock: (—), for head end lock only
*6 ø20 to ø32: (○), for ø40 to ø100 only
*7 Head end lock: (—), for rod end lock only
*8 With boss on rod end (Standard)
*9 ø180 to ø200: (○), for ø125 to ø160 only
*10 The body shape and model are the same as those of the existing CQ2 series product.

	CQ2□S (Anti-lateral load)	CQ2 (Long stroke)	CQ2K (Non-rotating rod)		CQ2-R/V (Water resistant)		CQP2 (Axial piping)*10			CBQ2 (With end lock)*10	
	Double acting	Double acting	Double acting		Double acting		Double acting	Single acting		Double acting	
	Single rod	Single rod	Single rod	Double rod	Single rod	Double rod	Single rod	Single rod/ Spring return	Single rod/ Spring extend	Single rod	
	ø32 to ø100	ø32 to ø100	ø12 to ø63		ø20 to ø100	ø40 to ø100	ø12 to ø100	ø12 to ø50		ø20 to ø100	**Symbol**
	—	—	—	—	—	—	—	—	—	—	**Standard**
	●	●	●	●	●	●	●	●	●	●	
	—	—	—	—	—	—	—	—	—	—	**D**
	●	●	●	●	●	●	●	●	●	●	
	○	●	—	—	—	—	●	—	—	—	**CQ2□H**
	○	●	○	○	—	—	○	○	○	○	**10-, 11-**
	●	●	○	○	○	○	○	○	○	●	**25A**
	●	●	●*2	●*2	○	○	●	●	●	○	**20-**
	○	○	—	—	○	○	○	○	○	○	**CQ2□M**
	○	○	◎	◎	○	○	◎	○	○	○	**XB6**
	○	○	○	○	○	○	◎	○	○	—	**XB7**
	○	○	○	○	○	○	◎	○	○	○	**XB9**
	◎	◎	◎*1	◎*1	◎*6	◎	○	○	○	◎	**XB10**
	○	○	○	○	○	○	◎	○	○	—	**XB13**
	○	○	○	○	○	○	○	○	○	○	**XB14**
	◎	—	◎	◎	○	○	○	○	○	○	**XC2(A)**
	○	◎	—	—	—	—	◎*4	○	○	○	**XC4**
	◎	◎	○	○	◎	◎	◎	◎	◎	○	**XC6(A)**
	○	○	◎	—	○	—	○	○	○	○*5	**XC8**
	○	○	◎	—	○	—	○	○	○	○*7	**XC9**
	○	○	◎	—	○	—	—	—	—	○	**XC10**
	○	○	◎	—	○	—	○	○	○	○	**XC11**
	◎	◎	◎*1	—	◎	—	○	○	○	◎	**XC26**
	◎	◎	—	—	○	—	—	—	—	○	**XC26□**
	◎	◎	◎	○	○	○	○	○	○	○	**XC27**
	○	◎	—	—	—	—	◎	○	○	○	**XC35**
	○	◎*8	◎*8	◎*8	○	○	◎	◎	◎	○	**XC36**
	◎	◎	◎	◎	◎	◎	◎	◎	◎	◎	**XC85**
	◎	◎	—	—	—	—	○	○	○	○	**XC88**
	◎	◎	—	—	—	—	○	○	○	○	**XC89**
	○	○	—	—	—	—	○	○	○	○	**XC91**
	○	○	—	—	—	—	○	○	○	○	**XC92**
	—	—	○	○	○	○	—	—	—	—	**X144**
	—	—	—	○	—	—	—	—	—	—	**X235**
	◎	◎	○	○	—	—	◎	◎	◎	○	**X271**
	○	○	○	—	○	—	○	○	○	○*5	**X525**
	○	○	○	—	○	—	○	○	○	○*7	**X526**
	—	—	—	◎	—	○	—	—	—	—	**X633**
	○	○	○	—	○	—	○	○	—	○	**X636**
	◎	—	◎	—	○	—	—	—	—	○	**X1876**

*11 Copper-free for the externally exposed part
For details, refer to the **Web Catalog**.
*12 For details, refer to the **Web Catalog**.
*13 Without rubber bumper (Standard)
*14 Excludes the air-hydro type
*15 Size ø4 does not have a built-in auto switch magnet.

Compact Cylinder: Standard Double Acting, Single Rod

CQ2 Series

ø4, ø6, ø10

RoHS

How to Order

CQ2 B 6 – 10 D ☐ Z

With auto switch: CDQ2 B 6 – 10 D M Z – M9BW ☐

With auto switch magnet

❶ ❷ ❸ ❹ ❺ ❻ ❼

❶ Mounting

B	Through-hole/Head end tapped

❷ Bore size

4	4 mm
6	6 mm
10	10 mm

∗ Auto switches cannot be mounted on ø4.

❸ Cylinder stroke [mm]

Bore size	Standard stroke
4, 6	5, 10
10	5, 10, 15, 20

❹ Action

D	Double acting

❺ Body option

Nil	Rod end female thread (Without thread for ø4)
C	With rubber bumper
M	Rod end male thread

∗ Combined body options "CM" can be selected.

❻ Auto switch

Nil	Without auto switch

∗ For applicable auto switches, refer to the table below.

❼ Number of auto switches

Nil	2
S	1
n	n

Applicable Auto Switches / Refer to the **Web Catalog** for further information on auto switches.

Type	Special function	Electrical entry	Indicator light	Wiring (Output)	Load voltage DC		Load voltage AC	Auto switch model Perpendicular	Auto switch model In-line	Lead wire length [m]∗2 0.5 (Nil)	1 (M)	3 (L)	5 (Z)	None (N)	Pre-wired connector	Applicable load	
Solid state auto switch	—	Grommet	Yes	3-wire (NPN)	24 V	5 V, 12 V	—	F8N	—	●	—	●	○	—	—	IC circuit	Relay, PLC
								M9NV	M9N	●	●	●	○	—	○		
				3-wire (PNP)				F8P	—	●	—	●	○	—	—		
								M9PV	M9P	●	●	●	○	—	○		
				2-wire		12 V		F8B	—	●	—	●	○	—	—	—	
								M9BV	M9B	●	●	●	○	—	○		
	Diagnostic indication (2-color indicator)			3-wire (NPN)		5 V, 12 V		M9NWV	M9NW	●	●	●	○	—	○	IC circuit	
				3-wire (PNP)				M9PWV	M9PW	●	●	●	○	—	○		
				2-wire		12 V		M9BWV	M9BW	●	●	●	○	—	○	—	
	Water resistant (2-color indicator)			3-wire (NPN)		5 V, 12 V		M9NAV∗1	M9NA∗1	○	○	●	○	—	○	IC circuit	
				3-wire (PNP)				M9PAV∗1	M9PA∗1	○	○	●	○	—	○		
				2-wire		12 V		M9BAV∗1	M9BA∗1	○	○	●	○	—	○	—	

∗1 Water-resistant type auto switches can be mounted on the above models, but SMC cannot guarantee water resistance. Please contact SMC regarding water-resistant types with the above model numbers.

∗2 Lead wire length symbols: 0.5 m ····· Nil (Example) M9N
1 m ····· M (Example) M9NM
3 m ····· L (Example) M9NL
5 m ····· Z (Example) M9NZ

∗ Solid state auto switches marked with a "○" are produced upon receipt of order.

∗ For 2-color indicator, use caution on hysteresis. Refer to the "Auto Switch Hysteresis" section in the **Web Catalog**.

∗ For the detailed specifications of auto switches, refer to the **Web Catalog**.

∗ Auto switches are shipped together with the product but do not come assembled.

Specifications

Pneumatic type

Bore size [mm]		4	6	10
Action		Double acting, Single rod		
Fluid		Air		
Proof pressure		1.0 MPa		
Maximum operating pressure		0.7 MPa		
Minimum operating pressure		0.15 MPa		0.1 MPa
Ambient and fluid temperatures		Without auto switch magnet: –10 to 70°C With auto switch magnet: –10 to 60°C (No freezing)		
Lubrication		Not required (Non-lube)		
Piston speed		50 to 500 mm/s		
Allowable kinetic energy [J]	**Without cushion**	0.9×10^{-3}	2.2×10^{-3}	5.9×10^{-3}
	With rubber bumper	7.5×10^{-3}	12.0×10^{-3}	51.6×10^{-3}
Stroke length tolerance		$^{+1.0}_{0}$ mm*1		

*1 Stroke length tolerance does not include the amount of bumper change.

Symbol

Without cushion

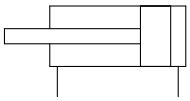

Rubber bumper

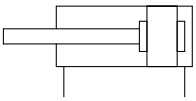

Theoretical Output

[N]

Bore size [mm]	Rod size [mm]	Operating direction	Piston area [mm²]	Operating pressure [MPa]		
				0.3	0.5	0.7
4	**2**	OUT	12.6	3.76	6.28	8.79
		IN	9.4	2.82	4.71	6.59
6	**4**	OUT	28.3	8.48	14.13	19.79
		IN	15.7	4.71	7.85	10.99
10	**6**	OUT	78.5	23.56	39.26	54.97
		IN	50.3	15.07	25.13	35.18

Weight

Without Auto Switch Magnet [g]

Bore size [mm]	Cylinder stroke [mm]			
	5	10	15	20
4	8.6	11.1	—	—
6	13.2	16.7	—	—
10	20.6	25.0	29.5	34.0

Additional Weight [g]

Bore size [mm]		4	6	10
Rod end male thread	Male thread	0.1	0.6	2.0
	Nut	0.2	0.4	1.3
With rubber bumper		0	0	0

Calculation: (Example) **CQ2B6-10DCMZ**
- Basic movable parts weight: CQ2B6-10DZ ····16.7 g
- Additional weight: Rod end male thread ····1.0 g
  With rubber bumper ····· 0 g
  17.7 g

With Auto Switch Magnet [g]

Bore size [mm]	Cylinder stroke [mm]			
	5	10	15	20
6	16.4	19.9	—	—
10	24.0	28.5	32.9	37.4

Additional Weight [g]

Bore size [mm]		4	6	10
Rod end male thread	Male thread	0.1	0.6	2.0
	Nut	0.2	0.4	1.3
With rubber bumper		0	0	0

Calculation: (Example) **CDQ2B6-10DCMZ**
- Basic movable parts weight: CDQ2B6-10DZ ···19.9 g
- Additional weight: Rod end male thread ····1.0 g
  With rubber bumper ····· 0 g
  20.9 g

For details on **auto switch mounting**
⇨ p. 149 to 165

- Auto Switch Proper Mounting Position (Detection at stroke end) and Mounting Height
- Minimum Stroke for Auto Switch Mounting
- Operating Range

Moisture Control Tube
IDK Series

When operating an actuator with a small bore size and a short stroke at a high frequency, dew condensation (water droplets) may occur inside the piping depending on the conditions.
Simply connecting the moisture control tube to the actuator will prevent dew condensation from occurring. For details, refer to the **Web Catalog**.

⚠ Precautions

Refer to pages 197 and 198 before handling the products.

Allowable Kinetic Energy

Load Mass and Piston Speed [J]

Bore size [mm]	4	6	10
Standard/ Allowable kinetic energy: **Ea**	0.9×10^{-3}	2.2×10^{-3}	5.9×10^{-3}
With rubber bumper/ Allowable kinetic energy: **Eb**	7.5×10^{-3}	12.0×10^{-3}	51.6×10^{-3}

$$\text{Kinetic energy } E\ [J] = \frac{(m1+m2)\,V^2}{2}$$

m1: Mass of cylinder movable parts [kg]
m2: Load mass [kg]
V: Piston speed [m/s]

Mass of Cylinder Movable Parts: Without Auto Switch Magnet [g]

Bore size [mm]	Cylinder stroke [mm]			
	5	10	15	20
4	0.7	0.8	—	—
6	2.1	2.6	—	—
10	6.4	7.5	8.6	9.7

Mass of Cylinder Movable Parts: With Auto Switch Magnet [g]

Bore size [mm]	Cylinder stroke [mm]			
	5	10	15	20
6	2.3	2.8	—	—
10	6.5	7.6	8.7	9.8

Additional Mass of Cylinder Movable Parts [g]

Bore size [mm]		4	6	10
Rod end male thread	Male thread	0.1	0.6	2.0
	Nut	0.2	0.4	1.3
With rubber bumper		0	0	0

Calculation: (Example) **CQ2B6-10DCMZ**
- Basic mass: CQ2B6-10DZ ····· 2.6 g
- Additional mass: Rod end male thread ····· 1.0 g
  With rubber bumper ····· 0 g
  3.6 g

Allowable Lateral Load at Rod End

Without Auto Switch Magnet

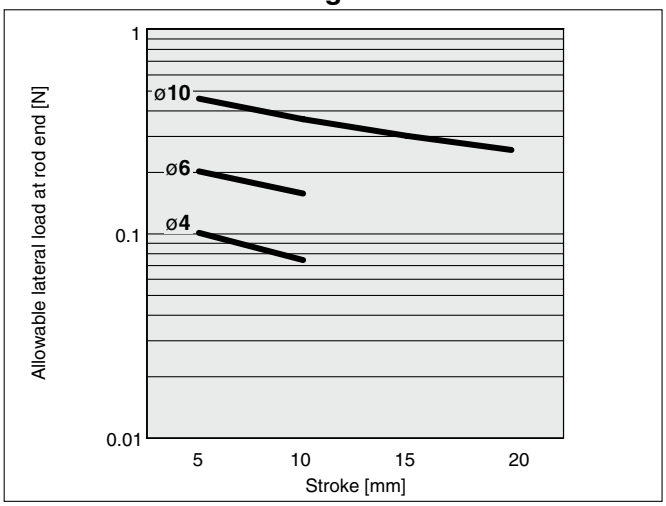

With Auto Switch Magnet

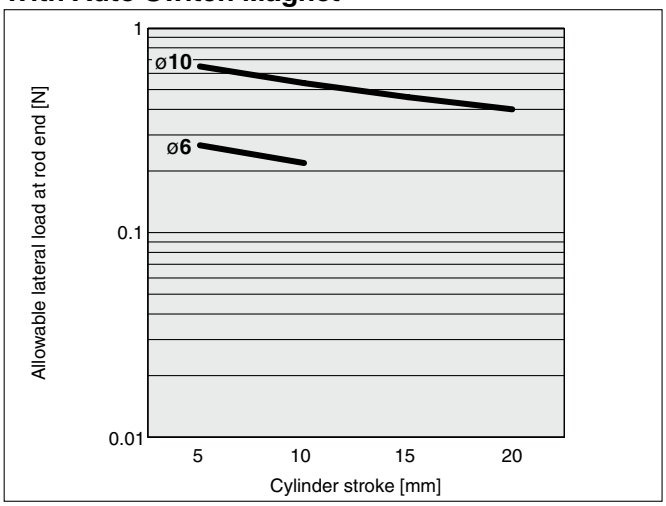

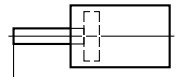

(Mounting orientation: Horizontal)

Through-hole Type Mounting Bolt for the CQ2

Mounting bolt for the through-hole mounting of the CQ2B is available as an option.
Refer to the following for ordering procedures.
Order the actual number of bolts that will be used.

Example) CQ-M3 x 25L 2 pcs.

Type: Hexagon socket head cap screw
Material: Chromium molybdenum steel
Surface treatment: Zinc chromated

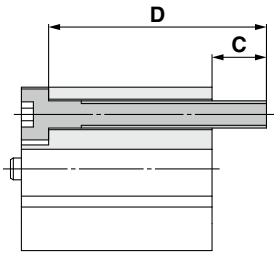

ø4

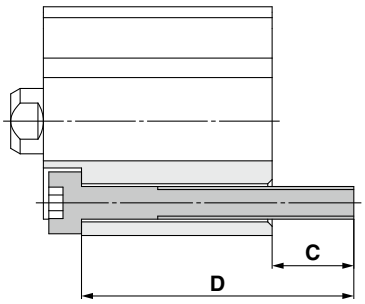

ø6, ø10

Without Auto Switch Magnet

Cylinder model	C	D	Mounting bolt size
CQ2B4 -5	5	20	M2.5 x 20L
-10		25	M2.5 x 25L
CQ2B6 -5	4.5	20	M3 x 20L
-10		25	M3 x 25L
CQ2B10 -5	7.5	25	M3 x 25L
-10		30	M3 x 30L
-15		35	M3 x 35L
-20		40	M3 x 40L

With Auto Switch Magnet

Cylinder model	C	D	Mounting bolt size
CDQ2B6 -5	4.5	25	M3 x 25L
-10		30	M3 x 30L
CDQ2B10 -5	7.5	30	M3 x 30L
-10		35	M3 x 35L
-15		40	M3 x 40L
-20		45	M3 x 45L

⚠ Caution

1. When mounting a cylinder, tighten the bolts with the proper tightening torque.

Applicable bore size [mm]	Mounting bolt	Proper tightening torque [N·m]*1
4	M2.5 x 0.45	0.36 ±30% (0.25 to 0.46)
6	M3 x 0.5	0.63 ±30% (0.44 to 0.81)
10		

*1 Torque coefficient: 0.2

Construction

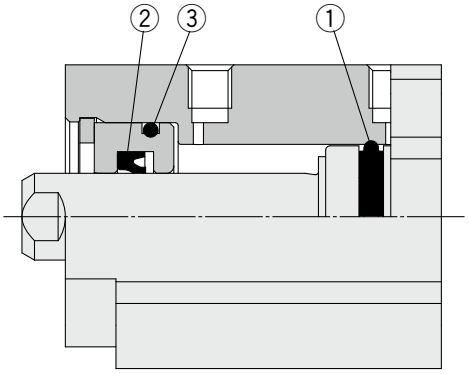

Component Parts

No.	Description
1	**Piston seal**
2	**Rod seal**
3	**Gasket**

Replacement Parts/Seal Kit

Bore size [mm]	Kit no.	Contents
4	CQ2B4-PS	Set of nos. ①, ②, ③
6	CQ2B6-PS	
10	CQ2B10-PS	

∗ Seal kit includes ①, ②, ③. Order the seal kit based on each bore size.
∗ The seal kit does not include a grease pack. Order it separately.
Grease pack part no.: GR-L-005 (5 g)

Bore Size

ø4

Without auto switch magnet: CQ2B4

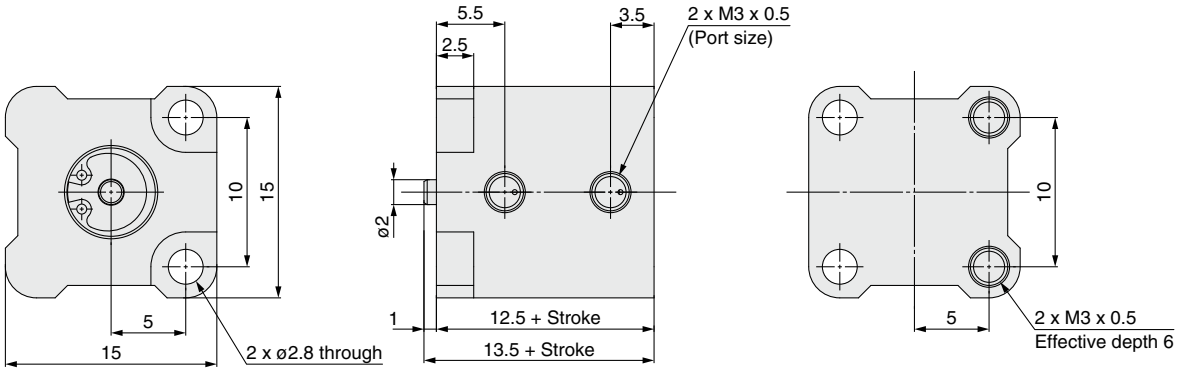

Rod end male thread

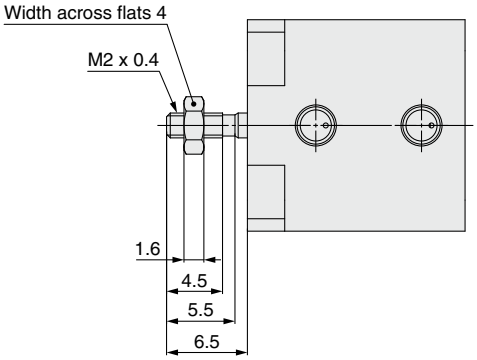

∗ For details on mounting speed controllers and fittings, refer to pages 197 and 198.

Rod End Nut

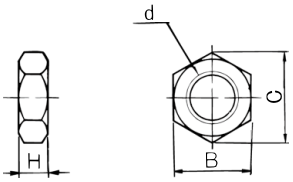

Material: Carbon steel
Surface treatment: Zinc chromated
[mm]

Bore size	Part no.	d	H	B	C
4	**NTJ-004A**	M2 x 0.4	1.6	4	4.6
6	**NTJ-006B**	M3 x 0.5	2.4	5.5	6.4
10	**NTJ-015C**	M5 x 0.8	4	8	9.4

Bore Size

ø6

Without auto switch magnet: CQ2B6

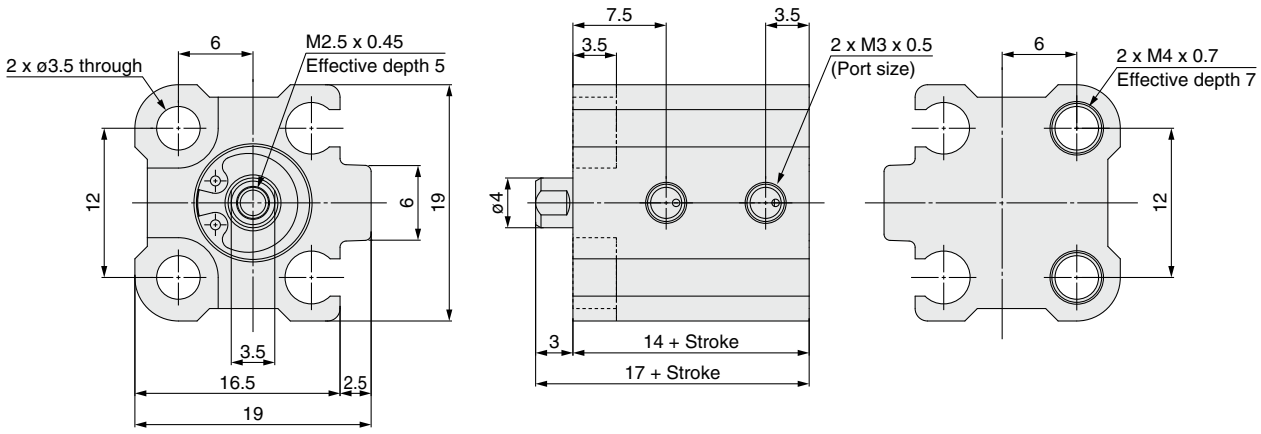

With auto switch magnet: CDQ2B6

∗ Dimensions other than those indicated are the same as those of the type without an auto switch magnet.

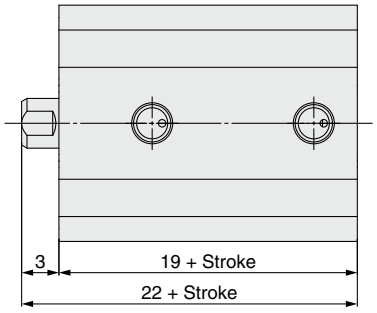

Rod end male thread

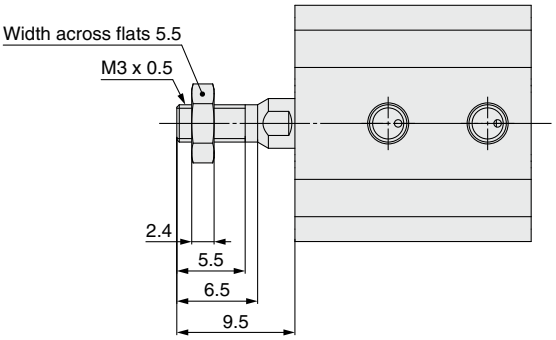

∗ For details on the rod end nut, refer to page 12.
∗ For details on mounting speed controllers and fittings, refer to pages 197 and 198.

Bore Size

ø10

Without auto switch magnet: CQ2B10

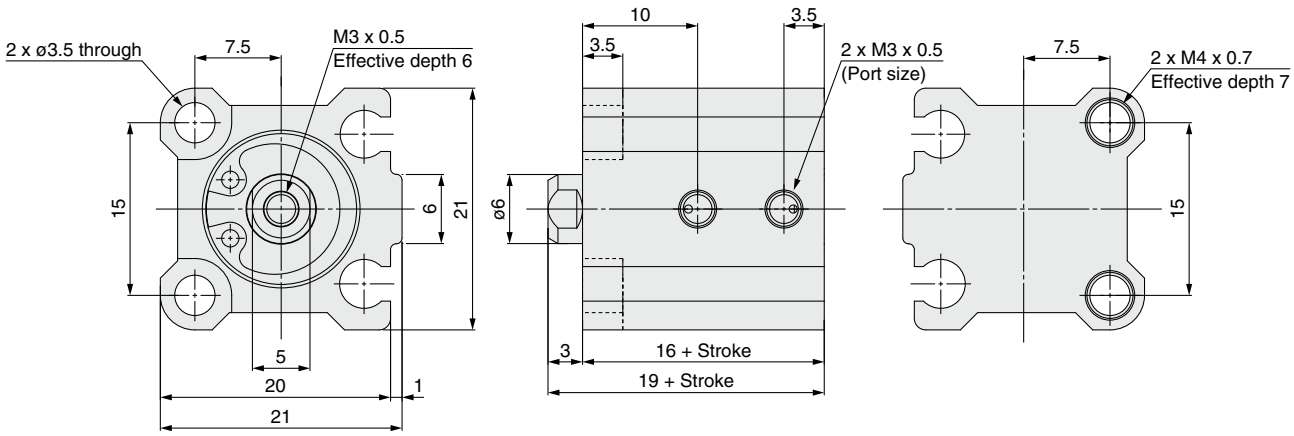

With auto switch magnet: CDQ2B10

∗ Dimensions other than those indicated are the same as those of the type without an auto switch magnet.

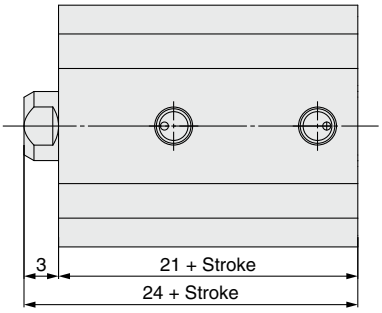

Rod end male thread

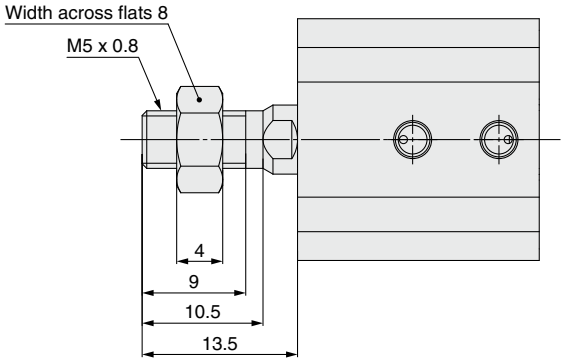

∗ For details on the rod end nut, refer to page 12.
∗ For details on mounting speed controllers and fittings, refer to pages 197 and 198.

Compact Cylinder: Standard Double Acting, Single Rod

CQ2 Series

ø12, ø16, ø20, ø25, ø32, ø40, ø50, ø63, ø80, ø100

How to Order

Without auto switch ø12 to ø25	CQ2 B □ 20 □ – 30 D □ — □ □ – □
Without auto switch ø32 to ø100	CQ2 B □ 32 □ – 30 D □ Z – □ □ – □
With auto switch	CDQ2 B □ 32 □ – 30 D M Z – L W – M9BW □ – □

❶ ❷ ❸ ❹ ❺ ❻ ❼ ❽ ❾ ❿ ⓫ ⓬ ⓭

With auto switch magnet
The overall length of the cylinder with an auto switch magnet is longer than that of the cylinder without an auto switch magnet by the length of the built-in magnet. For details, refer to the dimensions of each size.

❶ Mounting

B	Through-hole
A	Both ends tapped
L	Foot
LC	Compact foot
F	Rod flange
G	Head flange
D	Double clevis

∗ Mounting brackets are shipped together with the product but do not come assembled.
∗ Refer to ❾ for the through-hole type mounting bolt.
∗ For cylinders with mounting options "L," "LC," or "F," the cylinder rod protrusion dimensions (Dimensions L and L_1) vary from the standard cylinder. When only ordering the cylinder, order the rod end length increased by 10 mm (-XC2) cylinder. For details ⇨ p. 178

❷ Type

Nil	Pneumatic
H	Air-hydro∗1

∗1 The bore sizes available for the air-hydro type are ø20 to ø100.

❸ Bore size

12	12 mm
16	16 mm
20	20 mm
25	25 mm
32	32 mm
40	40 mm
50	50 mm
63	63 mm
80	80 mm
100	100 mm

❹ Port thread type

Nil	M thread	ø12 to ø25
	Rc	ø32 to ø100
TN	NPT	
TF	G	
F	Built-in One-touch fittings∗1	

∗1 The bore sizes available with One-touch fittings are ø32 to ø63. However, they cannot be selected for the air-hydro type.
∗ "TF" is not selectable for the air-hydro type.
∗ For cylinders without an auto switch magnet, M threads are compatible only with ø32-5 mm stroke.

❺ Cylinder stroke (For details on the minimum stroke for auto switch mounting ⇨ p. 157)

[mm]

Bore size	Standard stroke
12, 16	5, 10, 15, 20, 25, 30
20, 25	5, 10, 15, 20, 25, 30, 35, 40, 45, 50
32, 40	5, 10, 15, 20, 25, 30, 35, 40, 45, 50, 75, 100
50, 63, 80, 100	10, 15, 20, 25, 30, 35, 40, 45, 50, 75, 100

∗ For long strokes exceeding the standard stroke range ⇨ p. 80
∗ For details on the manufacturing of intermediate strokes ⇨ p. 18
∗ The bore sizes available for the air-hydro type are ø20 to ø100.

❻ Action

D	Double acting

❼ Body option

Nil	Rod end female thread
F	With boss on head end
C	With rubber bumper∗1
M	Rod end male thread

∗1 The type with a rubber bumper is not selectable for the air-hydro type.
∗ Combined body options, such as "FC," "FM," "FCM," and "CM" can be selected.

❽ Auto switch mounting groove

Z	ø12 to ø25	2 surfaces
	ø32 to ø100	4 surfaces

❾ Through-hole type mounting bolt

Nil	None
L	Shipped together

∗ Mounting bolt is shipped together with the product only when the mounting bracket is "B" (Through-hole). For details:
Without auto switch magnet ⇨ p. 21
With auto switch magnet ⇨ p. 22

∗ **When a made-to-order option is selected, the mounting bolt is not shipped together with the product. Please order it separately.**

❿ Rod end bracket (⇨ p. 34 to 36)

Nil	None
D	Type A mounting bracket + Joint
E	Type B mounting bracket + Joint
V	Single knuckle joint
W	Double knuckle joint

∗ Options "D" and "E" must be used in combination with body option (Nil), the rod end female thread, and options "V" and "W" must be used in combination with body option (M), the rod end male thread.
∗ A knuckle pin is not provided with the single knuckle joint (V). If a pin is required, please order it separately.
For details ⇨ p. 34

∗ **When a made-to-order option is selected, the rod end bracket cannot be selected. Please order it separately.**

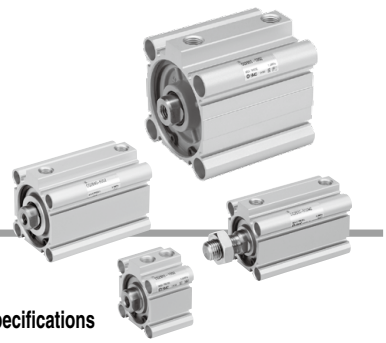

⓫ Auto switch

Nil	Without auto switch

∗ For applicable auto switches, refer to the table below.

⓬ Number of auto switches

Nil	2
S	1
n	n

⓭ Made to order common specifications

For details ⇨ p. 17

Cylinder Model with Auto Switch Magnet

If a cylinder with an auto switch magnet and without an auto switch is required, there is no need to enter the symbol for the auto switch.
(Example) CDQ2L32-25DZ

For details on **auto switch mounting** ⇨ p. 149 to 165

- Auto Switch Proper Mounting Position (Detection at stroke end) and Mounting Height
- Minimum Stroke for Auto Switch Mounting
- Operating Range
- Auto Switch Mounting Brackets/Part Nos.

Proposals for Improving Water and Dust-resistance

SMC offers a wide range of models suitable for various operating environments. This includes models that can be used in environments that the basic model cannot, such as those where coolant liquid, water droplets/splashing, dust, etc., are present.
For details, refer to the **Web Catalog**.

- **Water-resistant cylinder**
- **Cylinder with Stable Lubrication Function (Lube-retainer)**
- **Dust resistant cylinder**

Applicable Auto Switches / Refer to the **Web Catalog** for further information on auto switches.

Type	Special function	Electrical entry	Indicator light	Wiring (Output)	Load voltage DC		Load voltage AC	Auto switch model Perpendicular	Auto switch model In-line	Lead wire length [m] 0.5 (Nil)	1 (M)	3 (L)	5 (Z)	None (N)	Pre-wired connector	Applicable load	
Solid state auto switch	——	Grommet	Yes	3-wire (NPN)	24 V	5 V, 12 V	—	**M9NV**	**M9N**	●	●	●	○	—	○	IC circuit	Relay, PLC
				3-wire (PNP)				**M9PV**	**M9P**	●	●	●	○	—	○		
				2-wire		12 V		**M9BV**	**M9B**	●	●	●	○	—	○	—	
	Diagnostic indication (2-color indicator)			3-wire (NPN)		5 V, 12 V		**M9NWV**	**M9NW**	●	●	●	○	—	○	IC circuit	
				3-wire (PNP)				**M9PWV**	**M9PW**	●	●	●	○	—	○		
				2-wire		12 V		**M9BWV**	**M9BW**	●	●	●	○	—	○	—	
	Water resistant (2-color indicator)			3-wire (NPN)		5 V, 12 V		**M9NAV**∗1	**M9NA**∗1	○	○	●	○	—	○	IC circuit	
				3-wire (PNP)				**M9PAV**∗1	**M9PA**∗1	○	○	●	○	—	○		
				2-wire		12 V		**M9BAV**∗1	**M9BA**∗1	○	○	●	○	—	○	—	
	Magnetic field resistant (2-color indicator)			2-wire (Non-polar)		—		—	**P3DWA**	●	—	●	●	—	○		
Reed auto switch	——	Grommet	Yes	3-wire (NPN equivalent)	—	5 V	—	**A96V**	**A96**	●	●	●	●	—	○	IC circuit	—
			No	2-wire	24 V	12 V	100 V	**A93V**	**A93**	●	●	●	●	—	○∗2	—	Relay, PLC
						5 V,12 V	100 V or less	**A90V**	**A90**	●	●	●	●	—	○∗2	IC circuit	

∗1 Water-resistant type auto switches can be mounted on the models on page 15, but SMC cannot guarantee water resistance.
A water-resistant type cylinder (⇨ p. 107) is recommended for use in environments which require water resistance.
∗2 The load voltage used is 24 VDC.

∗ Lead wire length symbols: 0.5 m ····· Nil (Example) M9NW
1 m ····· M (Example) M9NWM
3 m ····· L (Example) M9NWL
5 m ····· Z (Example) M9NWZ

∗ Auto switches marked with a "○" are produced upon receipt of order.
∗ The D-P3DWA type is only available in sizes ø25 to ø100.

∗ There are applicable auto switches other than those listed above. For details ⇨ p. 165

Symbol

Without cushion

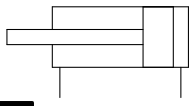

Rubber bumper

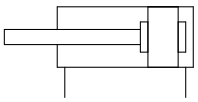

Made to Order

Made to Order Common Specifications
(For details ⇨ p. 167 to 196)

Symbol	Specifications
-XA□	Change of rod end shape
-XB6	Heat-resistant cylinder (–10 to 150°C) w/o auto switch only*1
-XB7	Cold-resistant cylinder (–40 to 70°C) w/o auto switch only
-XB9	Low-speed cylinder (10 to 50 mm/s)
-XB10	Intermediate stroke (Exclusive body type)
-XB13	Low-speed cylinder (5 to 50 mm/s)
-XB14	Cylinder with heat-resistant auto switch*1
-XC2(A)	Rod end length increased by 10 mm (For foot and flange bracket)
-XC4	With heavy duty scraper
-XC6	Piston rod/Retaining ring/Rod end nut material: Stainless steel
-XC8	Adjustable stroke cylinder/Adjustable extension type
-XC9	Adjustable stroke cylinder/Adjustable retraction type
-XC10	Dual stroke cylinder/Double rod type
-XC11	Dual stroke cylinder/Single rod type
-XC26	With split pins for double clevis pin/double knuckle joint pin and flat washers
-XC26□	Double clevis width/Double knuckle width 12.5 mm, 16.5 mm, or 19.5 mm: With double clevis and double knuckle joint
-XC27	Double clevis pin/Double knuckle joint pin material: Stainless steel 304
-XC35	With coil scraper
-XC36	With boss on rod end
-XC85	Grease for food processing equipment
-XC88	Spatter-resistant coil scraper, Lube-retainer, Grease for welding (Piston rod: Stainless steel 304)
-XC89	Spatter-resistant coil scraper, Lube-retainer, Grease for welding (Piston rod: S45C)
-XC91	Spatter-resistant coil scraper, Grease for welding (Piston rod: S45C)
-XC92	Dust-resistant actuator
-X144	Special port location, with auto switch
-X271	Fluororubber seals*1
-X525	Long stroke for adjustable extension stroke cylinder (-XC8)
-X526	Long stroke for adjustable retraction stroke cylinder (-XC9)
-X636	Long stroke for dual stroke single rod cylinder
-X1876	Cylinder tube: With concave boss on head end

*1 Excludes the air-hydro type

Clean Series/Low Particle Generation
For details, refer to the **Web Catalog**.

* Stainless steel accessories are also available. For details ⇨ p. 34

Moisture Control Tube
IDK Series

When operating an actuator with a small bore size and a short stroke at a high frequency, dew condensation (water droplets) may occur inside the piping depending on the conditions.
Simply connecting the moisture control tube to the actuator will prevent dew condensation from occurring. For details, refer to the **Web Catalog**.

⚠ Precautions

Refer to page 197 before handling the products.

Specifications

Pneumatic type

Bore size [mm]		12	16	20	25	32	40	50	63	80	100
Action		Double acting, Single rod									
Fluid		Air									
Proof pressure		1.5 MPa									
Maximum operating pressure		1.0 MPa									
Minimum operating pressure		0.07 MPa		0.05 MPa							
Ambient and fluid temperatures		Without auto switch magnet: –10 to 70°C With auto switch magnet: –10 to 60°C (No freezing)									
Lubrication		Not required (Non-lube)									
Piston speed		50 to 500 mm/s									
Cushion		Without cushion or With rubber bumper									
Allowable kinetic energy [J]	**Without cushion**	0.022	0.038	0.055	0.09	0.15	0.26	0.46	0.77	1.36	2.27
	With rubber bumper	0.043	0.075	0.11	0.18	0.29	0.52	0.91	1.54	2.71	4.54
Stroke length tolerance		$^{+1.0\ mm*1}_{0}$									

*1 Stroke length tolerance does not include the amount of bumper change.

Air-hydro type

Bore size [mm]	20	25	32	40	50	63	80	100
Action	Double acting, Single rod							
Fluid	Turbine oil*1							
Proof pressure	1.5 MPa							
Maximum operating pressure	1.0 MPa							
Minimum operating pressure	0.18 MPa			0.1 MPa				
Ambient and fluid temperatures	5 to 60°C							
Piston speed	5 to 50 mm/s							
Cushion	None							
Stroke length tolerance	$^{+1.0\ mm}_{0}$							

*1 Actuator Precautions 5 ⇨ Refer to the **Web Catalog**.

Mounting Bracket Part Nos.

Bore size [mm]		Foot*1	Compact foot*1	Flange	Double clevis	Double clevis pivot bracket
12	Without auto switch magnet	CQ-L012	CQ-LC012	CQ-F012	CQ-D012	CQ-C012
	With auto switch magnet	CQ-LZ12	CQ-LCZ12			
16	Without auto switch magnet	CQ-L016	CQ-LC016	CQ-F016	CQ-D016	CQ-C016
	With auto switch magnet	CQ-LZ16	CQ-LCZ16			
20	Without auto switch magnet	CQ-L020	CQ-LC020	CQ-F020	CQ-D020	CQ-C020
	With auto switch magnet	CQ-LZ20	CQ-LCZ20			
25	Without auto switch magnet	CQ-L025	CQ-LC025	CQ-F025	CQ-D025	CQ-C025
	With auto switch magnet	CQ-LZ25	CQ-LCZ25			
32		CQ-L032	CQ-LC032	CQ-F032	CQ-D032	CQ-C032
40		CQ-L040	CQ-LC040	CQ-F040	CQ-D040	CQ-C040
50		CQ-L050	CQ-LC050	CQ-F050	CQ-D050	CQ-C050
63		CQ-L063	CQ-LC063	CQ-F063	CQ-D063	CQ-C063
80		CQ-L080	CQ-LC080	CQ-F080	CQ-D080	CQ-C080
100		CQ-L100	CQ-LC100	CQ-F100	CQ-D100	CQ-C100

*1 When ordering foot and compact foot brackets, the required quantity will be different depending on the bore size.
ø12 to ø25:
- Without auto switch magnet: Order 2 pieces per cylinder.
- With auto switch magnet: Order 1 piece per cylinder. (Part number for a set of 2 foot brackets)

ø32 to ø100:
- Order 2 pieces per cylinder.

* Parts included with each type of bracket are as follows.
Foot, Compact foot, Flange: Body mounting bolts
Double clevis: Clevis pin, Type C retaining rings for axis, Body mounting bolts
* For details on accessory brackets (Options) ⇨ p. 29 to 36
* Foot, compact foot, flange brackets, etc., cannot be retrofitted for through-hole mounting (B).

Manufacturing of Intermediate Strokes

Strokes are available in 1 mm increments.
As 2 different types are available, be sure to check the body dimensions.
For the air-hydro type, only ② the exclusive body type "-XB10" is applicable.

How to Order: 57 mm stroke

CQ2B50 − 57 DZ − □

Stroke ● **Stroke suffix**

Nil	A 18 mm spacer is installed on 75 mm stroke tube.	⇨ ①
XB10	Makes 57 mm stroke tube.	⇨ ②

1. Spacer-installed type

Symbol
Nil

A spacer is installed on the standard stroke body (◆ indication). (Excludes the air-hydro type)
The ◎ indicates the selectable stroke range.

Bore size [mm]	Stroke range	Stroke																								
		←→	5	←→	10	←→	15	←→	20	←→	25	←→	30	←→	35	←→	40	←→	45	←→	50	←→	75	←→	100
12, 16	1 to 29	◎	◆	◎	◆	◎	◆	◎	◆	◎	◆	◎	◆												
20, 25	1 to 49	◎	◆	◎	◆	◎	◆	◎	◆	◎	◆	◎	◆	◎	◆	◎	◆	◎	◆	◎	◆				
32, 40	1 to 99	◎	◆	◎	◆	◎	◆	◎	◆	◎	◆	◎	◆	◎	◆	◎	◆	◎	◆	◎	◆	◎	◆	◎	◆
50 to 100	1 to 99		◎		◆	◎	◆	◎	◆	◎	◆	◎	◆	◎	◆	◎	◆	◎	◆	◎	◆	◎	◆	◎	◆

Ordering example

Part no.	**CQ2B50-57DZ**
Description	● Uses a standard stroke (75 mm) tube. ● Makes 57 mm stroke with 18 mm spacer inside. ● The B dimension is 115.5 mm. B = 40.5 + 75

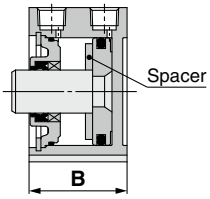

2. Exclusive body type

Symbol
-XB10

A made-to-order exclusive body for specified strokes is also available. The overall length can be made shorter than that of the spacer-installed type.

Bore size [mm]	Stroke range
12, 16	6 to 29
20, 25	6 to 49
32, 40	6 to 99
50 to 100	11 to 99

∗ In the case of exclusive body type with ø32 to ø100 (-XB10) with the stroke length exceeding 50 mm, reference values of the longitudinal dimension (A/B dimension) will be the same as those with auto switch magnet.
For details ⇨ p. 174

Ordering example

Part no.	**CQ2B50-57DZ-XB10**
Description	● Makes 57 mm stroke tube. ● The B dimension is 97.5 mm. B = 40.5 + 57

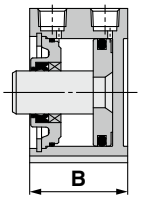

Allowable Kinetic Energy

Load Mass and Piston Speed [J]

Bore size [mm]	12	16	20	25	32	40	50	63	80	100
Standard/ Allowable kinetic energy: Ea	0.022	0.038	0.055	0.09	0.15	0.26	0.46	0.77	1.36	2.27
With rubber bumper/ Allowable kinetic energy: Eb	0.043	0.075	0.110	0.18	0.29	0.52	0.91	1.54	2.71	4.54

$$\text{Kinetic energy } E\ [J] = \frac{(m1+m2)\,V^2}{2}$$

m1: Mass of cylinder movable parts [kg]
m2: Load mass [kg]
V: Piston speed [m/s]

Mass of Cylinder Movable Parts: Without Auto Switch Magnet [g]

Bore size [mm]	Cylinder stroke [mm]											
	5	10	15	20	25	30	35	40	45	50	75	100
12	5	6	7	8	10	11	—	—	—	—	—	—
16	9	11	13	15	17	19	—	—	—	—	—	—
20	15	18	21	24	27	31	34	37	40	44	—	—
25	24	28	33	37	42	46	51	55	60	64	—	—
32	45	52	60	68	76	84	92	100	107	115	170	209
40	64	72	80	88	96	104	112	119	127	135	190	229
50	—	117	129	141	153	166	178	190	202	214	300	361
63	—	153	165	177	190	202	214	226	239	251	337	398
80	—	270	289	308	327	347	366	385	404	423	557	653
100	—	487	515	543	570	598	625	653	681	708	901	1038

Mass of Cylinder Movable Parts: With Auto Switch Magnet [g]

Bore size [mm]	Cylinder stroke [mm]											
	5	10	15	20	25	30	35	40	45	50	75	100
12	8	9	10	11	12	13	—	—	—	—	—	—
16	16	18	20	22	24	26	—	—	—	—	—	—
20	28	31	34	37	40	44	47	50	53	56	—	—
25	44	48	53	57	62	66	71	75	80	84	—	—
32	78	86	93	101	109	117	125	133	140	148	187	227
40	109	117	125	133	140	148	156	164	172	180	219	258
50	—	187	199	211	223	236	248	260	272	285	346	407
63	—	254	266	278	290	303	315	327	339	352	413	474
80	—	433	453	472	491	510	530	549	568	587	683	778
100	—	741	768	796	823	851	879	906	934	962	1099	1236

Additional Mass of Cylinder Movable Parts [g]

Bore size [mm]		12	16	20	25	32	40	50	63	80	100
Rod end male thread	Male thread	1.5	3	6	12	26	27	53	53	120	175
	Nut	1	2	4	8	17	17	32	32	49	116
With rubber bumper		0	0	–2	–3	–3	–7	–9	–18	–31	–56

Calculation: (Example) **CDQ2B32-20DCMZ**
- Basic mass: CDQ2B32-20DZ ····· 101 g
- Additional mass: Rod end male thread ····· 43 g
  With rubber bumper ····· –3 g
  141 g

Allowable Lateral Load at Rod End

Without Auto Switch Magnet

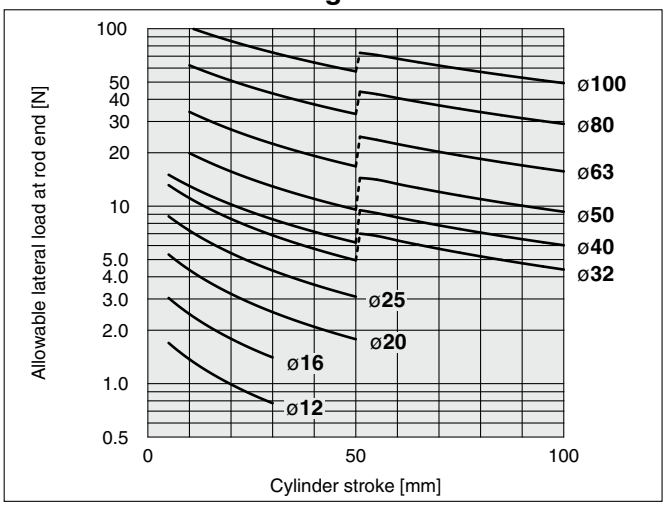

With Auto Switch Magnet

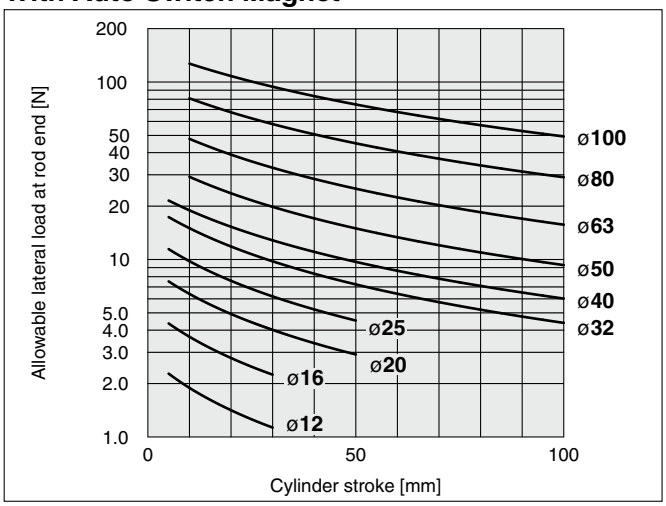

If an allowable lateral load at rod end is exceeding the value in the graph, we recommend anti-lateral load type cylinder be used.

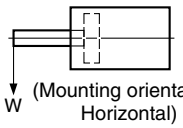

(Mounting orientation: Horizontal)

Theoretical Output

[N]

Bore size [mm]	Operating direction	Operating pressure [MPa]		
		0.3	0.5	0.7
12	IN	25	42	59
	OUT	34	57	79
16	IN	45	75	106
	OUT	60	101	141
20	IN	71	118	165
	OUT	94	157	220
25	IN	113	189	264
	OUT	147	245	344
32	IN	181	302	422
	OUT	241	402	563
40	IN	317	528	739
	OUT	377	628	880
50	IN	495	825	1150
	OUT	589	982	1370
63	IN	841	1400	1960
	OUT	935	1560	2180
80	IN	1360	2270	3170
	OUT	1510	2510	3520
100	IN	2140	3570	5000
	OUT	2360	3930	5500

Weight

Without Auto Switch Magnet

[g]

Bore size [mm]	Cylinder stroke [mm]											
	5	10	15	20	25	30	35	40	45	50	75	100
12	29	35	41	47	54	60	—	—	—	—	—	—
16	42	50	59	67	76	84	—	—	—	—	—	—
20	63	75	88	101	114	127	140	152	165	178	—	—
25	86	100	115	129	144	158	173	187	202	216	—	—
32	125	145	165	184	204	224	244	263	283	303	448	547
40	187	208	230	251	273	294	315	337	358	380	552	664
50	—	339	372	405	438	471	504	537	570	603	872	1043
63	—	480	518	556	594	632	670	708	746	784	1112	1308
80	—	916	976	1036	1097	1157	1217	1277	1338	1398	1917	2215
100	—	1608	1688	1768	1849	1929	2010	2090	2170	2251	2982	3391

Additional Weight

[g]

Bore size [mm]		12	16	20	25	32	40	50	63	80	100
Both ends tapped		2	2	6	6	6	6	6	19	45	45
Rod end male thread	Male thread	1.5	3	6	12	26	27	53	53	120	175
	Nut	1	2	4	8	17	17	32	32	49	116
With boss on head end		0.7	1.3	2	3	5	7	13	25	45	96
With rubber bumper		0	0	–2	–3	–3	–7	–9	–18	–31	–56
Built-in One-touch fittings		—	—	—	—	12	12	21	21	—	—
Foot (Including mounting bolts)		50	62	150	175	120	138	219	297	589	968
Compact foot (Including mounting bolts)		37	46	115	134	94	109	172	234	492	762
Rod flange (Including mounting bolts)		57	69	139	161	180	214	373	559	1056	1365
Head flange (Including mounting bolts)		54	65	133	152	165	198	348	534	1017	1309
Double clevis (Including pin, retaining rings, bolts)		32	39	88	123	151	196	393	554	1109	1887

Calculation: (Example) **CQ2D32-20DCMZ**

- Basic weight: CQ2B32-20DZ ····· 184 g
- Additional weight: Both ends tapped ····· 6 g
  - Rod end male thread ····· 43 g
  - With rubber bumper ····· –3 g
  - Double clevis ····· 151 g

  381 g

With Auto Switch Magnet

[g]

Bore size [mm]	Cylinder stroke [mm]											
	5	10	15	20	25	30	35	40	45	50	75	100
12	43	49	55	61	67	73	—	—	—	—	—	—
16	64	71	79	87	95	102	—	—	—	—	—	—
20	94	106	118	131	143	155	167	179	191	203	—	—
25	134	149	164	180	195	210	226	241	256	272	—	—
32	182	202	222	241	261	281	300	320	340	359	459	558
40	269	290	312	333	355	376	398	420	441	463	575	687
50	—	455	488	521	554	587	620	653	686	719	891	1062
63	—	627	665	703	741	779	817	855	893	931	1129	1326
80	—	1162	1222	1282	1342	1403	1463	1524	1584	1644	1941	2237
100	—	1966	2047	2127	2208	2288	2368	2449	2529	2610	3018	3426

Additional Weight

[g]

Bore size [mm]		12	16	20	25	32	40	50	63	80	100
Both ends tapped		1	1	3	3	6	6	6	19	45	45
Rod end male thread	Male thread	1.5	3	6	12	26	27	53	53	120	175
	Nut	1	2	4	8	17	17	32	32	49	116
With boss on head end		0.7	1.3	2	3	5	7	13	25	45	96
With rubber bumper		0	0	–2	–3	–3	–7	–9	–18	–31	–56
Built-in One-touch fittings		—	—	—	—	12	12	21	21	—	—
Foot (Including mounting bolts)		41	53	126	149	120	138	219	297	589	968
Compact foot (Including mounting bolts)		30	38	94	113	94	109	172	234	492	762
Rod flange (Including mounting bolts)		54	67	131	153	180	214	373	559	1056	1365
Head flange (Including mounting bolts)		52	63	124	144	165	198	348	534	1017	1309
Double clevis (Including pin, retaining rings, bolts)		29	35	78	114	151	196	393	554	1109	1887

Calculation: (Example) **CDQ2D32-20DCMZ**

- Basic weight: CQ2B32-20DZ ····· 241 g
- Additional weight: Both ends tapped ····· 6 g
  - Rod end male thread ····· 43 g
  - With rubber bumper ····· –3 g
  - Double clevis ····· 151 g

  438 g

Add each weight of auto switches when auto switches are mounted.

Through-hole Type Mounting Bolt for the CQ2: Without Auto Switch Magnet

Mounting bolt for the through-hole mounting of the CQ2B is available as an option.
Refer to the following for ordering procedures.
Order the actual number of bolts that will be used.
For models with an auto switch magnet ⇨ p. 22

Example) CQ-M3 x 25L 4 pcs.

Type: Hexagon socket head cap screw
Material: Chromium molybdenum steel
Surface treatment: Zinc chromated

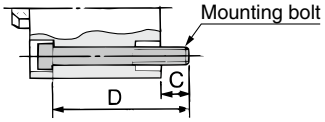

Cylinder model	C	D	Mounting bolt part no.
CQ2B12-5D	6.5	25	CQ-M3 x 25L
-10D		30	x 30L
-15D		35	x 35L
-20D		40	x 40L
-25D		45	x 45L
-30D		50	x 50L
CQ2B16-5D	5	25	CQ-M3 x 25L
-10D		30	x 30L
-15D		35	x 35L
-20D		40	x 40L
-25D		45	x 45L
-30D		50	x 50L
CQ2B20-5D	7.5	25	CQ-M5 x 25L
-10D		30	x 30L
-15D		35	x 35L
-20D		40	x 40L
-25D		45	x 45L
-30D		50	x 50L
-35D		55	x 55L
-40D		60	x 60L
-45D		65	x 65L
-50D		70	x 70L
CQ2B25-5D	9.5	30	CQ-M5 x 30L
-10D		35	x 35L
-15D		40	x 40L
-20D		45	x 45L
-25D		50	x 50L
-30D		55	x 55L
-35D		60	x 60L
-40D		65	x 65L
-45D		70	x 70L
-50D		75	x 75L
CQ2B32-5DZ	9	30	CQ-M5 x 30L
-10DZ		35	x 35L
-15DZ		40	x 40L
-20DZ		45	x 45L
-25DZ		50	x 50L
-30DZ		55	x 55L
-35DZ		60	x 60L
-40DZ		65	x 65L
-45DZ		70	x 70L
-50DZ		75	x 75L
-55DZ-XB10		90	x 90L
-60DZ-XB10		95	x 95L
-65DZ-XB10		100	x 100L
-70DZ-XB10		105	x 105L
-75DZ		110	x 110L
-80DZ-XB10		115	x 115L
-85DZ-XB10		120	x 120L
-90DZ-XB10		125	x 125L
-95DZ-XB10		130	x 130L
-100DZ		135	x 135L

Cylinder model	C	D	Mounting bolt part no.
CQ2B40-5DZ	7.5	35	CQ-M5 x 35L
-10DZ		40	x 40L
-15DZ		45	x 45L
-20DZ		50	x 50L
-25DZ		55	x 55L
-30DZ		60	x 60L
-35DZ		65	x 65L
-40DZ		70	x 70L
-45DZ		75	x 75L
-50DZ		80	x 80L
-55DZ-XB10		95	x 95L
-60DZ-XB10		100	x 100L
-65DZ-XB10		105	x 105L
-70DZ-XB10		110	x 110L
-75DZ		115	x 115L
-80DZ-XB10		120	x 120L
-85DZ-XB10		125	x 125L
-90DZ-XB10		130	x 130L
-95DZ-XB10		135	x 135L
-100DZ		140	x 140L
CQ2B50-10DZ	12.5	45	CQ-M6 x 45L
-15DZ		50	x 50L
-20DZ		55	x 55L
-25DZ		60	x 60L
-30DZ		65	x 65L
-35DZ		70	x 70L
-40DZ		75	x 75L
-45DZ		80	x 80L
-50DZ		85	x 85L
-55DZ-XB10		100	x 100L
-60DZ-XB10		105	x 105L
-65DZ-XB10		110	x 110L
-70DZ-XB10		115	x 115L
-75DZ		120	x 120L
-80DZ-XB10		125	x 125L
-85DZ-XB10		130	x 130L
-90DZ-XB10		135	x 135L
-95DZ-XB10		140	x 140L
-100DZ		145	x 145L
CQ2B63-10DZ	14.5	50	CQ-M8 x 50L
-15DZ		55	x 55L
-20DZ		60	x 60L
-25DZ		65	x 65L
-30DZ		70	x 70L
-35DZ		75	x 75L
-40DZ		80	x 80L
-45DZ		85	x 85L
-50DZ		90	x 90L
-55DZ-XB10		105	x 105L
-60DZ-XB10		110	x 110L
-65DZ-XB10		115	x 115L
-70DZ-XB10		120	x 120L
-75DZ		125	x 125L
-80DZ-XB10		130	x 130L
-85DZ-XB10		135	x 135L
-90DZ-XB10		140	x 140L
-95DZ-XB10		145	x 145L
-100DZ		150	x 150L

Cylinder model	C	D	Mounting bolt part no.
CQ2B80-10DZ	15	55	CQ-M10 x 55L
-15DZ		60	x 60L
-20DZ		65	x 65L
-25DZ		70	x 70L
-30DZ		75	x 75L
-35DZ		80	x 80L
-40DZ		85	x 85L
-45DZ		90	x 90L
-50DZ		95	x 95L
-55DZ-XB10		110	x 110L
-60DZ-XB10		115	x 115L
-65DZ-XB10		120	x 120L
-70DZ-XB10		125	x 125L
-75DZ		130	x 130L
-80DZ-XB10		135	x 135L
-85DZ-XB10		140	x 140L
-90DZ-XB10		145	x 145L
-95DZ-XB10		150	x 150L
-100DZ		155	x 155L
CQ2B100-10DZ	15.5	65	CQ-M10 x 65L
-15DZ		70	x 70L
-20DZ		75	x 75L
-25DZ		80	x 80L
-30DZ		85	x 85L
-35DZ		90	x 90L
-40DZ		95	x 95L
-45DZ		100	x 100L
-50DZ		105	x 105L
-55DZ-XB10		120	x 120L
-60DZ-XB10		125	x 125L
-65DZ-XB10		130	x 130L
-70DZ-XB10		135	x 135L
-75DZ		140	x 140L
-80DZ-XB10		145	x 145L
-85DZ-XB10		150	x 150L
-90DZ-XB10		155	x 155L
-95DZ-XB10		160	x 160L
-100DZ		165	x 165L

Through-hole Type Mounting Bolt for the CDQ2: With Auto Switch Magnet

Mounting bolt for the through-hole mounting of the CDQ2B is available as an option.
Refer to the following for ordering procedures.
Order the actual number of bolts that will be used.
For models without an auto switch magnet ⇨ p. 21

Example) CQ-M3 x 35L 2 pcs.

Type: Hexagon socket head cap screw
Material: Chromium molybdenum steel
Surface treatment: Zinc chromated

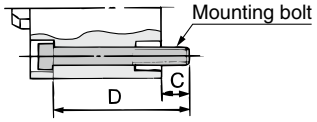

Cylinder model	C	D	Mounting bolt part no.
CDQ2B12-5DZ	5.5	35	CQ-M3 x 35L
-10DZ		40	x 40L
-15DZ		45	x 45L
-20DZ		50	x 50L
-25DZ		55	x 55L
-30DZ		60	x 60L
CDQ2B16-5DZ	8	40	CQ-M3 x 40L
-10DZ		45	x 45L
-15DZ		50	x 50L
-20DZ		55	x 55L
-25DZ		60	x 60L
-30DZ		65	x 65L
CDQ2B20-5DZ	10.5	40	CQ-M5 x 40L
-10DZ		45	x 45L
-15DZ		50	x 50L
-20DZ		55	x 55L
-25DZ		60	x 60L
-30DZ		65	x 65L
-35DZ		70	x 70L
-40DZ		75	x 75L
-45DZ		80	x 80L
-50DZ		85	x 85L
CDQ2B25-5DZ	9.5	40	CQ-M5 x 40L
-10DZ		45	x 45L
-15DZ		50	x 50L
-20DZ		55	x 55L
-25DZ		60	x 60L
-30DZ		65	x 65L
-35DZ		70	x 70L
-40DZ		75	x 75L
-45DZ		80	x 80L
-50DZ		85	x 85L
CDQ2B32-5DZ	9	40	CQ-M5 x 40L
-10DZ		45	x 45L
-15DZ		50	x 50L
-20DZ		55	x 55L
-25DZ		60	x 60L
-30DZ		65	x 65L
-35DZ		70	x 70L
-40DZ		75	x 75L
-45DZ		80	x 80L
-50DZ		85	x 85L
-55DZ-XB10		90	x 90L
-60DZ-XB10		95	x 95L
-65DZ-XB10		100	x 100L
-70DZ-XB10		105	x 105L
-75DZ		110	x 110L
-80DZ-XB10		115	x 115L
-85DZ-XB10		120	x 120L
-90DZ-XB10		125	x 125L
-95DZ-XB10		130	x 130L
-100DZ		135	x 135L

Cylinder model	C	D	Mounting bolt part no.
CDQ2B40-5DZ	7.5	45	CQ-M5 x 45L
-10DZ		50	x 50L
-15DZ		55	x 55L
-20DZ		60	x 60L
-25DZ		65	x 65L
-30DZ		70	x 70L
-35DZ		75	x 75L
-40DZ		80	x 80L
-45DZ		85	x 85L
-50DZ		90	x 90L
-55DZ-XB10		95	x 95L
-60DZ-XB10		100	x 100L
-65DZ-XB10		105	x 105L
-70DZ-XB10		110	x 110L
-75DZ		115	x 115L
-80DZ-XB10		120	x 120L
-85DZ-XB10		125	x 125L
-90DZ-XB10		130	x 130L
-95DZ-XB10		135	x 135L
-100DZ		140	x 140L
CDQ2B50-10DZ	12.5	55	CQ-M6 x 55L
-15DZ		60	x 60L
-20DZ		65	x 65L
-25DZ		70	x 70L
-30DZ		75	x 75L
-35DZ		80	x 80L
-40DZ		85	x 85L
-45DZ		90	x 90L
-50DZ		95	x 95L
-55DZ-XB10		100	x 100L
-60DZ-XB10		105	x 105L
-65DZ-XB10		110	x 110L
-70DZ-XB10		115	x 115L
-75DZ		120	x 120L
-80DZ-XB10		125	x 125L
-85DZ-XB10		130	x 130L
-90DZ-XB10		135	x 135L
-95DZ-XB10		140	x 140L
-100DZ		145	x 145L
CDQ2B63-10DZ	14.5	60	CQ-M8 x 60L
-15DZ		65	x 65L
-20DZ		70	x 70L
-25DZ		75	x 75L
-30DZ		80	x 80L
-35DZ		85	x 85L
-40DZ		90	x 90L
-45DZ		95	x 95L
-50DZ		100	x 100L
-55DZ-XB10		105	x 105L
-60DZ-XB10		110	x 110L
-65DZ-XB10		115	x 115L
-70DZ-XB10		120	x 120L
-75DZ		125	x 125L
-80DZ-XB10		130	x 130L
-85DZ-XB10		135	x 135L
-90DZ-XB10		140	x 140L
-95DZ-XB10		145	x 145L
-100DZ		150	x 150L

Cylinder model	C	D	Mounting bolt part no.
CDQ2B80-10DZ	15	65	CQ-M10 x 65L
-15DZ		70	x 70L
-20DZ		75	x 75L
-25DZ		80	x 80L
-30DZ		85	x 85L
-35DZ		90	x 90L
-40DZ		95	x 95L
-45DZ		100	x 100L
-50DZ		105	x 105L
-55DZ-XB10		110	x 110L
-60DZ-XB10		115	x 115L
-65DZ-XB10		120	x 120L
-70DZ-XB10		125	x 125L
-75DZ		130	x 130L
-80DZ-XB10		135	x 135L
-85DZ-XB10		140	x 140L
-90DZ-XB10		145	x 145L
-95DZ-XB10		150	x 150L
-100DZ		155	x 155L
CDQ2B100-10DZ	15.5	75	CQ-M10 x 75L
-15DZ		80	x 80L
-20DZ		85	x 85L
-25DZ		90	x 90L
-30DZ		95	x 95L
-35DZ		100	x 100L
-40DZ		105	x 105L
-45DZ		110	x 110L
-50DZ		115	x 115L
-55DZ-XB10		120	x 120L
-60DZ-XB10		125	x 125L
-65DZ-XB10		130	x 130L
-70DZ-XB10		135	x 135L
-75DZ		140	x 140L
-80DZ-XB10		145	x 145L
-85DZ-XB10		150	x 150L
-90DZ-XB10		155	x 155L
-95DZ-XB10		160	x 160L
-100DZ		165	x 165L

Construction

Without auto switch magnet

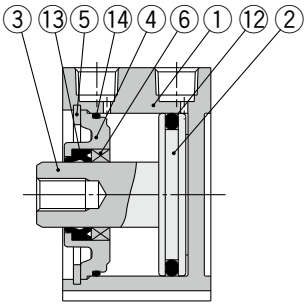

With rubber bumper

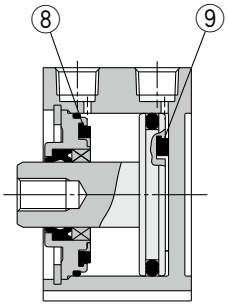

With boss on head end

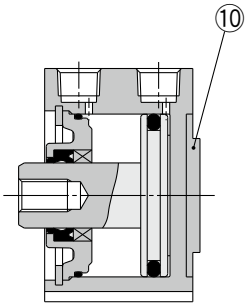

With auto switch magnet

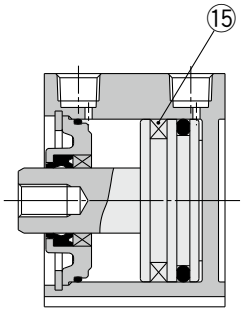

Built-in One-touch fittings

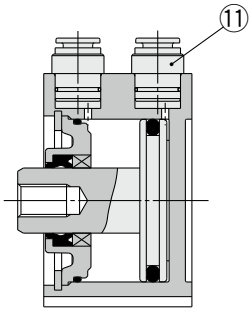

Rod end male thread

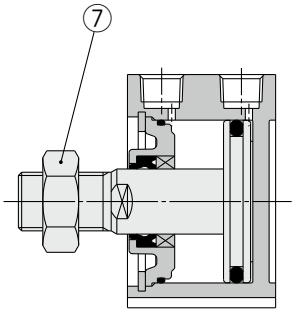

Component Parts

No.	Description	Material	Note
1	**Cylinder tube**	Aluminum alloy	Hard anodized
2	**Piston**	Aluminum alloy	
3	**Piston rod**	Stainless steel	ø12 to ø25
		Carbon steel	ø32 to ø100, Hard chrome plating
4	**Collar**	Aluminum alloy	ø12 to ø40, Anodized
		Aluminum alloy casted	ø50 to ø100, Chromated, Painted
5	**Retaining ring**	Carbon tool steel	Phosphate coated
6	**Bushing**	Bearing alloy	For ø50 or more only
7	**Rod end nut**	Carbon steel	Zinc chromated
8	**Bumper A**	Urethane	Pneumatic type only

No.	Description	Material	Note
9	**Bumper B**	Urethane	Pneumatic type only
10	**Centering location ring**	Aluminum alloy	ø20 to ø100, Hard anodized
11	**One-touch fitting**	—	ø32 to ø63
12	**Piston seal**	NBR	
13	**Rod seal**	NBR	
14	**Gasket**	NBR	
15	**Magnet**	—	

Replacement Parts/Seal Kit
Pneumatic Type

Bore size [mm]	Kit no.	Contents
12	CQ2B12-PS	Set of nos. ⑫, ⑬, ⑭
16	CQ2B16-PS	
20	CQ2B20-PS	
25	CQ2B25-PS	
32	CQ2B32-PS	
40	CQ2B40-PS	
50	CQ2B50-PS	
63	CQ2B63-PS	
80	CQ2B80-PS	
100	CQ2B100-PS	

∗ Seal kit includes ⑫, ⑬, ⑭. Order the seal kit based on each bore size.
∗ The seal kit does not include a grease pack. Order it separately.
Grease pack part no.: GR-S-010 (10 g)

Air-hydro Type

Bore size [mm]	Kit no.	Contents
20	CQ2BH20-PS	Set of nos. ⑫, ⑬, ⑭
25	CQ2BH25-PS	
32	CQ2BH32-PS	
40	CQ2BH40-PS	
50	CQ2BH50-PS	
63	CQ2BH63-PS	
80	CQ2BH80-PS	
100	CQ2BH100-PS	

∗ Seal kit includes ⑫, ⑬, ⑭. Order the seal kit based on each bore size.
∗ The seal kit does not include a grease pack. Order it separately.
Grease pack part no.: GR-S-010 (10 g)

Compact Cylinder with Stable Lubrication Function (Lube-retainer)

CDQ2 [Mounting type] [Bore size] **M** – [Stroke] **D** [Body option] **Z** [Mounting bolt] [Rod end thread] – [Auto switch]

- With auto switch magnet
- With stable lubrication function (Lube-retainer)

∗ Available only for models with an auto switch magnet

Specifications

Bore size [mm]	32, 40, 50, 63, 80, 100
Action	Double acting, Single rod
Min. operating pressure	0.1 MPa
Piston speed	50 to 500 mm/s
Cushion	None

∗ Specifications other than those shown above are the same as the standard model.

Dimensions (Dimensions other than those shown below are the same as those of the standard model.)

ø32 to ø100

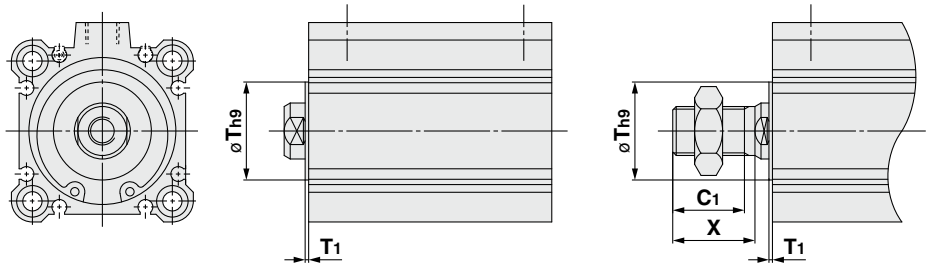

[mm]

Bore size	T	T_1	C_1	X
32	22	1	20.5	23.5
40	28	1	20.5	23.5
50	35	2	24	26.5
63	35	2	24	26.5
80	—	—	32.5	35.5
100	—	—	32.5	35.5

∗ The mounting dimensions of the mounting bracket are the same as the standard model.

For details, refer to the **Web Catalog.**

Bore Size

ø12 to ø25 Without Auto Switch Magnet

Through-hole: CQ2B

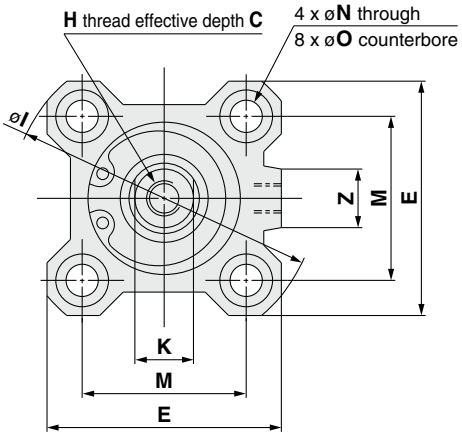

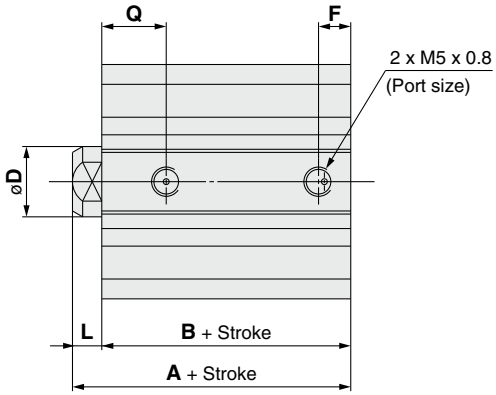

[mm]

Bore size [mm]	Stroke range [mm]	A	B	C	D	E	F	H	I	K	L	M	N	O	Q	Z
12	5 to 30	20.5	17	6	6	25	5	M3 x 0.5	32	5	3.5	15.5	3.5	6.5 depth 3.5	7.5	—
16	5 to 30	22	18.5	8	8	29	5.5	M4 x 0.7	38	6	3.5	20	3.5	6.5 depth 3.5	8	10
20	5 to 50	24	19.5	7	10	36	5.5	M5 x 0.8	47	8	4.5	25.5	5.5	9 depth 7	8	10
25	5 to 50	27.5	22.5	12	12	40	5.5	M6 x 1.0	52	10	5	28	5.5	9 depth 7	9	10

∗ For details on the rod end nut and accessory brackets ⇨ p. 34 to 36
∗ The external dimensions with rubber bumper are same as those of the standard, as shown above.
∗ For calculation on the longitudinal dimension of intermediate strokes ⇨ p. 18

Both ends tapped

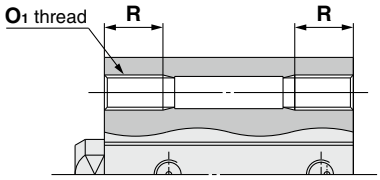

[mm]

Bore size [mm]	O_1	R
12	M4 x 0.7	7
16	M4 x 0.7	7
20	M6 x 1.0	10
25	M6 x 1.0	10

With boss on head end

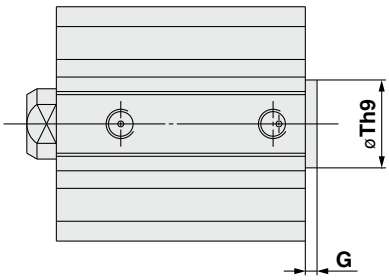

[mm]

Bore size [mm]	G	Th9
12	1.5	$15^{0}_{-0.043}$
16	1.5	$20^{0}_{-0.052}$
20	2	$13^{0}_{-0.043}$
25	2	$15^{0}_{-0.043}$

∗ With boss on rod end: Option (Suffix "-XC36" to the end of model number.)

Rod end male thread

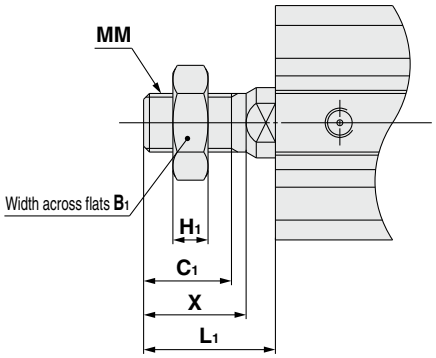

[mm]

Bore size [mm]	B_1	C_1	H_1	L_1	MM	X
12	8	9	4	14	M5 x 0.8	10.5
16	10	10	5	15.5	M6 x 1.0	12
20	13	12	5	18.5	M8 x 1.25	14
25	17	15	6	22.5	M10 x 1.25	17.5

Bore Size

ø12 to ø25 With Auto Switch Magnet

Through-hole: CDQ2B

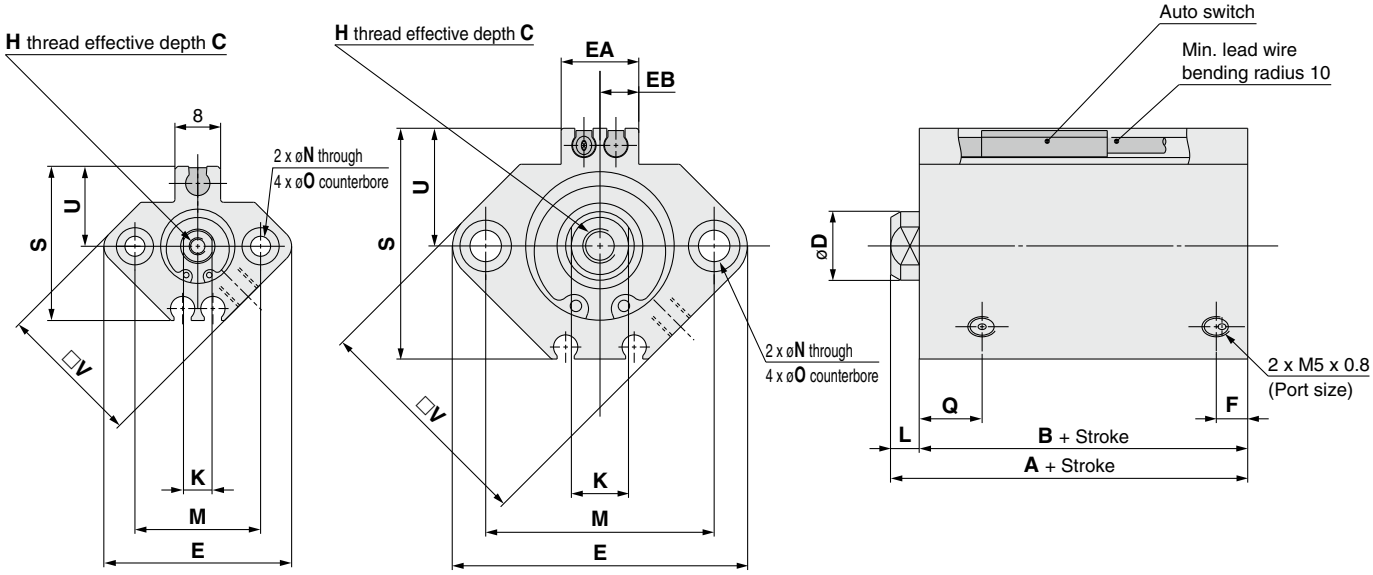

ø12 ø16 to ø25

[mm]

Bore size [mm]	Stroke range [mm]	A	B	C	D	E	EA	EB	F	H	K	L	M	N	O	Q	S	U	V
12	5 to 30	31.5	28	6	6	33	—	—	6.5	M3 x 0.5	5	3.5	22	3.5	6.5 depth 3.5	11	27.5	14	25
16	5 to 30	34	30.5	8	8	37	13.2	6.6	5.5	M4 x 0.7	6	3.5	28	3.5	6.5 depth 3.5	10	29.5	15	29
20	5 to 50	36	31.5	7	10	47	13.6	6.8	5.5	M5 x 0.8	8	4.5	36	5.5	9 depth 7	8	35.5	18	36
25	5 to 50	37.5	32.5	12	12	52	13.6	6.8	5.5	M6 x 1.0	10	5	40	5.5	9 depth 7	9	40.5	21	40

∗ For details on the rod end nut and accessory brackets ⇨ p. 34 to 36
∗ The external dimensions with rubber bumper are same as those of the standard, as shown above.
∗ For calculation on the longitudinal dimension of intermediate strokes ⇨ p. 18
∗ For the auto switch proper mounting position and mounting height ⇨ p. 149 to 156

Both ends tapped

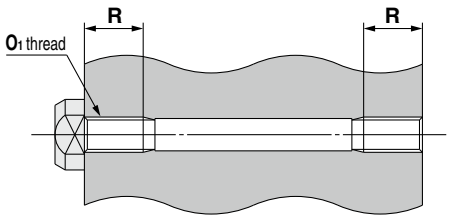

[mm]

Bore size [mm]	O_1	R
12	M4 x 0.7	7
16	M4 x 0.7	7
20	M6 x 1.0	10
25	M6 x 1.0	10

With boss on head end

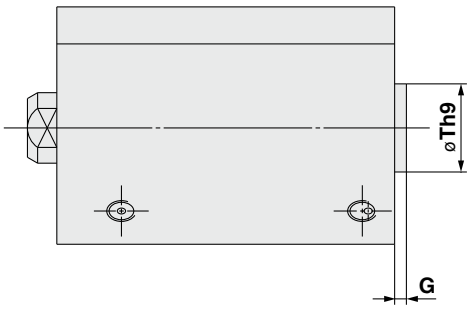

[mm]

Bore size [mm]	G	Th9
12	1.5	$15^{0}_{-0.043}$
16	1.5	$20^{0}_{-0.052}$
20	2	$13^{0}_{-0.043}$
25	2	$15^{0}_{-0.043}$

∗ With boss on rod end: Option (Suffix "-XC36" to the end of model number.)

Rod end male thread

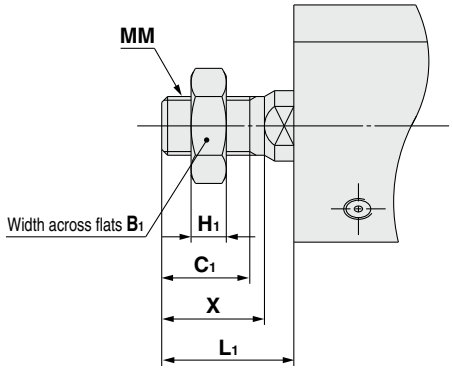

[mm]

Bore size [mm]	B_1	C_1	H_1	L_1	MM	X
12	8	9	4	14	M5 x 0.8	10.5
16	10	10	5	15.5	M6 x 1.0	12
20	13	12	5	18.5	M8 x 1.25	14
25	17	15	6	22.5	M10 x 1.25	17.5

Bore Size

ø32 to ø50 With/Without Auto Switch Magnet

Through-hole: CⒹQ2B

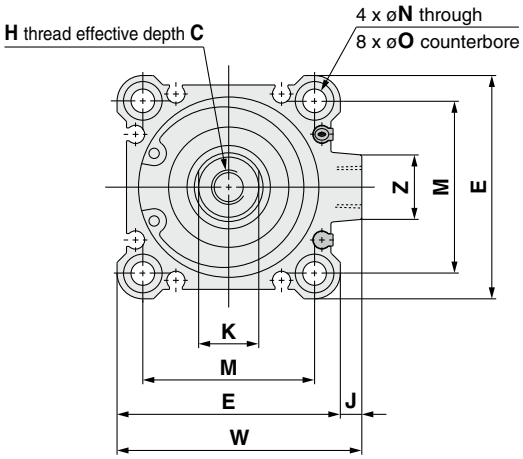

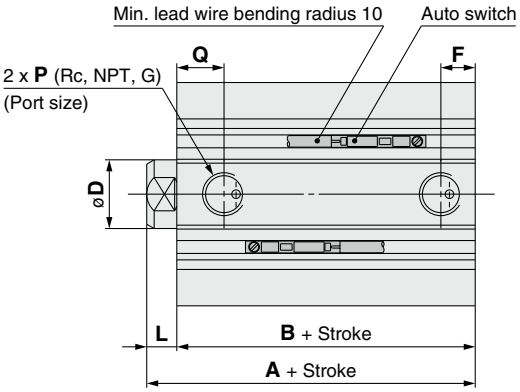

[mm]

Bore size [mm]	Stroke range [mm]	Without auto switch magnet				With auto switch magnet				C	D	E	H	J	K	L	M	N
		A	B	F	P	A	B	F	P									
32	5	30	23	5.5	M5 x 0.8	40	33	7.5	1/8	13	16	45	M8 x 1.25	4.5	14	7	34	5.5
	10 to 50			7.5	1/8													
	75, 100	40	33															
40	5 to 50	36.5	29.5	7.5	1/8	46.5	39.5	7.5	1/8	13	16	52	M8 x 1.25	5	14	7	40	5.5
	75, 100	46.5	39.5															
50	10 to 50	38.5	30.5	10.5	1/4	48.5	40.5	10.5	1/4	15	20	64	M10 x 1.5	7	17	8	50	6.6
	75, 100	48.5	40.5															

Bore size [mm]	O	Q	W	Z
32	9 depth 7	10	49.5	14
40	9 depth 7	12.5	57	15
50	11 depth 8	10.5	71	19

* For details on the rod end nut and accessory brackets ⇨ p. 34 to 36
* The external dimensions with rubber bumper are same as those of the standard, as shown above.
* For calculation on the longitudinal dimension of intermediate strokes ⇨ p. 18
  The spacer-installed type (Standard, -XB10A) and the exclusive body type (-XB10) are available.
* For the auto switch proper mounting position and mounting height ⇨ p. 149 to 156

Both ends tapped

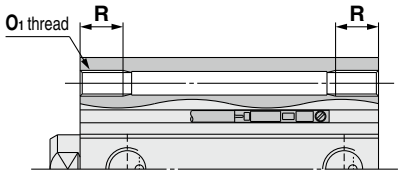

[mm]

Bore size [mm]	O_1	R
32	M6 x 1.0	10
40	M6 x 1.0	10
50	M8 x 1.25	14

With boss on head end

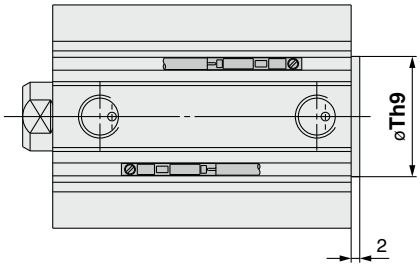

[mm]

Bore size [mm]	Th9
32	$21^{0}_{-0.052}$
40	$28^{0}_{-0.052}$
50	$35^{0}_{-0.062}$

* With boss on rod end: Option (Suffix "-XC36" to the end of model number.)

Rod end male thread

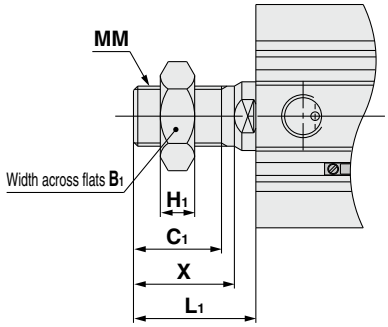

[mm]

Bore size [mm]	B_1	C_1	H_1	L_1	MM	X
32	22	20.5	8	28.5	M14 x 1.5	23.5
40	22	20.5	8	28.5	M14 x 1.5	23.5
50	27	26	11	33.5	M18 x 1.5	28.5

Built-in One-touch fittings

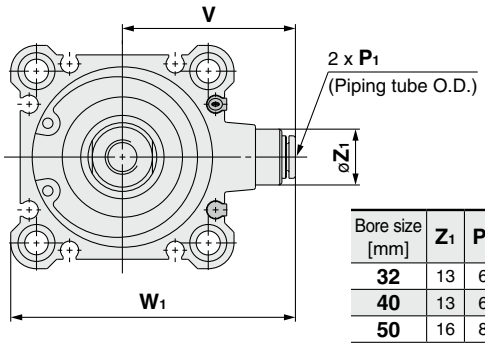

[mm]

Bore size [mm]	Z_1	P_1	V	W_1
32	13	6	36.5	59
40	13	6	40.5	66
50	16	8	50	82

* The dimensions of the ø32-5 mm stroke with built-in One-touch fittings (without magnet) are the same as those of the 10 mm stroke cylinder tube.

Bore Size

ø63 to ø100 With/Without Auto Switch Magnet

Through-hole: CDQ2B

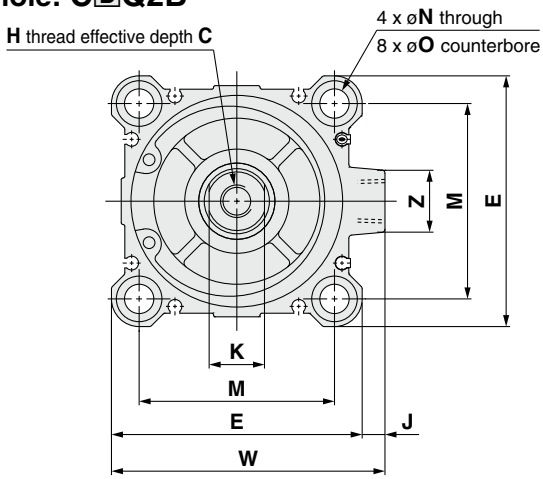

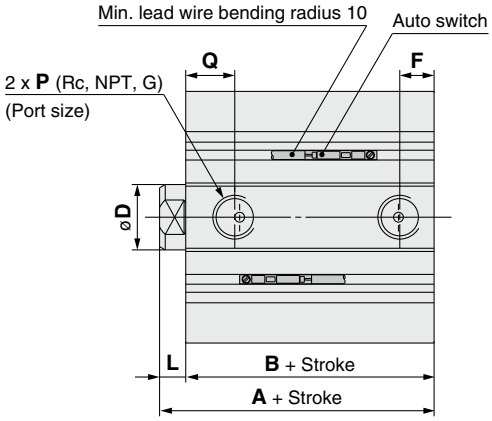

[mm]

Bore size [mm]	Stroke range [mm]	Without auto switch magnet A	Without auto switch magnet B	With auto switch magnet A	With auto switch magnet B	C	D	E	F	H	J	K	L	M	N	O	P	Q	W	Z
63	10 to 50	44	36	54	46	15	20	77	10.5	M10 x 1.5	7	17	8	60	9	14 depth 10.5	1/4	15	84	19
	75, 100	54	46																	
80	10 to 50	53.5	43.5	63.5	53.5	21	25	98	12.5	M16 x 2.0	6	22	10	77	11	17.5 depth 13.5	3/8	16	104	25
	75, 100	63.5	53.5																	
100	10 to 50	65	53	75	63	27	30	117	13	M20 x 2.5	6.5	27	12	94	11	17.5 depth 13.5	3/8	23	123.5	25
	75, 100	75	63																	

∗ For details on the rod end nut and accessory brackets ⇨ p. 34 to 36
∗ The external dimensions with rubber bumper are same as those of the standard, as shown above.
∗ For calculation on the longitudinal dimension of intermediate strokes ⇨ p. 18
∗ For the auto switch proper mounting position and mounting height ⇨ p. 149 to 156

Both ends tapped

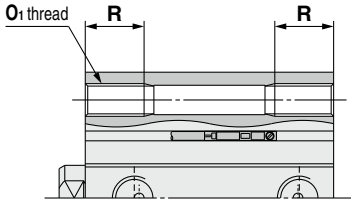

[mm]

Bore size [mm]	O_1	R
63	M10 x 1.5	18
80	M12 x 1.75	22
100	M12 x 1.75	22

With boss on head end

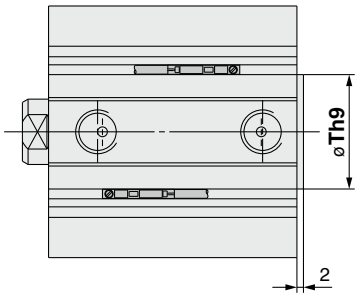

[mm]

Bore size [mm]	Th9
63	$35^{0}_{-0.062}$
80	$43^{0}_{-0.062}$
100	$59^{0}_{-0.074}$

∗ With boss on rod end: Option (Suffix "-XC36" to the end of model number.)

Rod end male thread

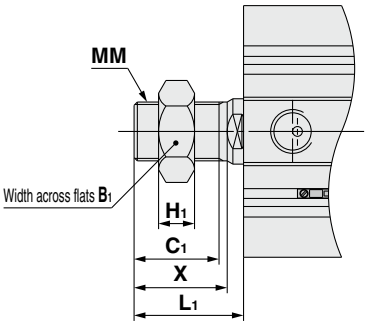

[mm]

Bore size [mm]	B_1	C_1	H_1	L_1	MM	X
63	27	26	11	33.5	M18 x 1.5	28.5
80	32	32.5	13	43.5	M22 x 1.5	35.5
100	41	32.5	16	43.5	M26 x 1.5	35.5

Built-in One-touch fittings: ø63

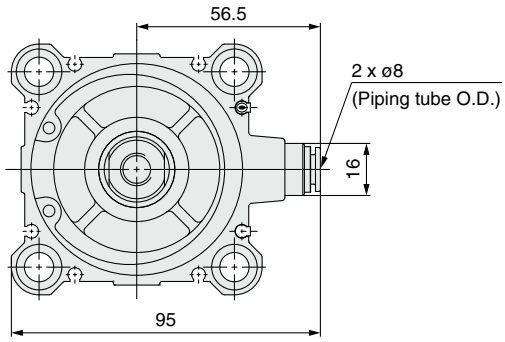

Accessory Brackets

Mounting Brackets

Foot

ø12 to ø25

With auto switch magnet
CQ-LZ□□

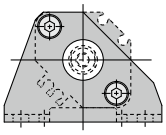

Without auto switch magnet
CQ-L0□□

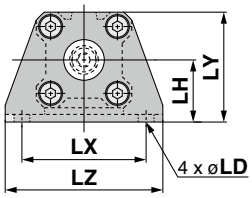

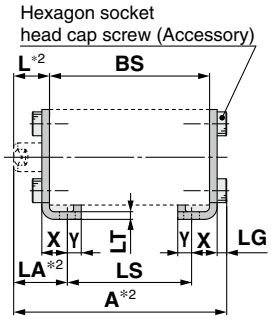

Rod end male thread

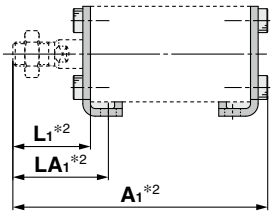

ø32 to ø100

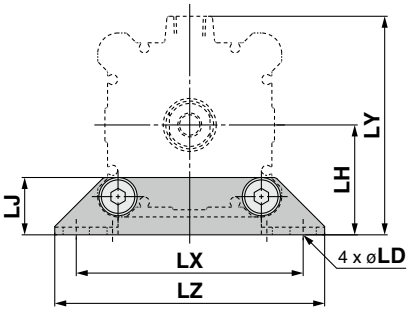

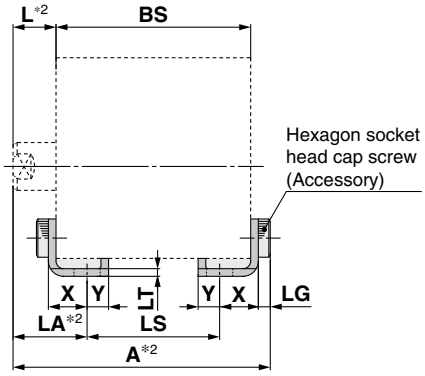

Rod end male thread

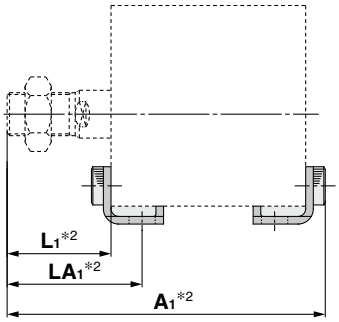

∗1 The foot bracket cannot be retrofitted for through-hole mounting (B).
∗2 This shows the piston rod in the retracted state. For the single acting, spring extend type (C□Q2□T), the length of the product will increase with the length of the stroke due to the spring force.

∗ BS indicates the overall length of the cylinder tube to be used.

Material: Carbon steel, Surface treatment: Nickel plating

[mm]

Bore size [mm]	Part no.	A	A_1	L	L_1	LA	LA_1	LD	LG	LH	LJ	LS	LT	LX	LY	LZ	X	Y
12	CQ-L012 CQ-LZ12	BS + 18.3	BS + 28.8	13.5	24	19.5	30	4.5	2.8	17	—	BS-12	2	34	29.5	44	8	4.5
16	CQ-L016 CQ-LZ16	BS + 18.3	BS + 30.3	13.5	25.5	19.5	31.5	4.5	2.8	19	—	BS-12	2	38	33.5	48	8	5
20	CQ-L020 CQ-LZ20	BS + 21.7	BS + 35.7	14.5	28.5	20.5	34.5	6.6	4	24	—	BS-12	3.2	48	42	62	9.2	5.8
25	CQ-L025 CQ-LZ25	BS + 22.2	BS + 39.7	15	32.5	22.5	40	6.6	4	26	—	BS-15	3.2	52	46	66	10.7	5.8
32	CQ-L032	BS + 24.2	BS + 45.7	17	38.5	25	46.5	6.6	4	30	18.5	BS-16	3.2	57	57	71	11.2	5.8
40	CQ-L040	BS + 24.2	BS + 45.7	17	38.5	25	46.5	6.6	4	33	18.5	BS-16	3.2	64	64	78	11.2	7
50	CQ-L050	BS + 26.2	BS + 51.7	18	43.5	29.5	55	9	5	39	21	BS-23	3.2	79	78	95	14.7	8
63	CQ-L063	BS + 26.2	BS + 51.7	18	43.5	31	56.5	11	5	46	24	BS-26	3.2	95	91.5	113	16.2	9
80	CQ-L080	BS + 31.5	BS + 65	20	53.5	35	68.5	13	7	59	31	BS-30	4.5	118	114	140	19.5	11
100	CQ-L100	BS + 35	BS + 66.5	22	53.5	39	70.5	13	7	71	36	BS-34	6	137	136	162	23	12.5

∗ For details on the rod end nut and accessory brackets ⇨ p. 34 to 36

Mounting Brackets

Compact foot

ø12 to ø25

With auto switch magnet
CQ-LCZ□□

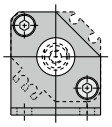

Without auto switch magnet
CQ-LC0□□

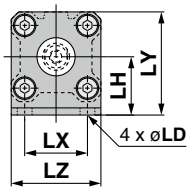

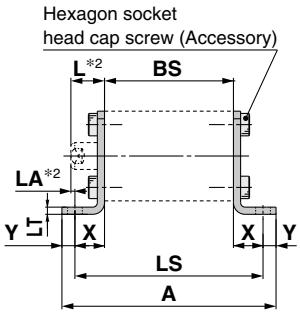

Rod end male thread

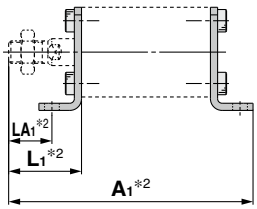

ø32 to ø100

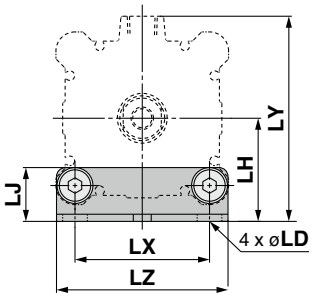

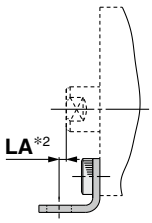

ø63 to ø100

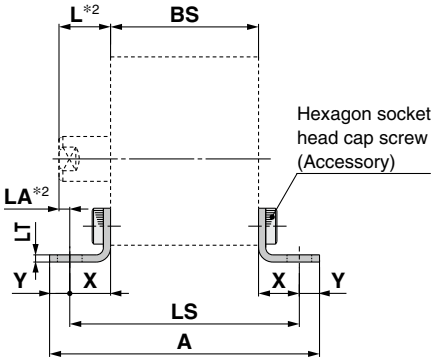

Rod end male thread

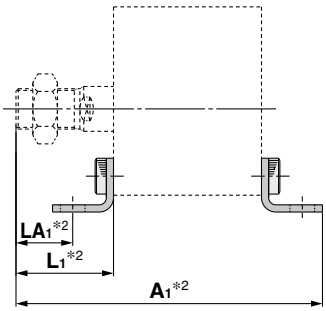

∗1 The compact foot bracket cannot be retrofitted for through-hole mounting (B).
∗2 This shows the piston rod in the retracted state. For the single acting, spring extend type (C□Q2□T), the length of the product will increase with the length of the stroke due to the spring force.

∗ BS indicates the overall length of the cylinder tube to be used.

Material: Carbon steel, Surface treatment: Zinc chromated

[mm]

Bore size [mm]	Part no.	A	A1	L	L1	LA	LA1	LD	LH	LJ	LS	LT	LX	LY	LZ	X	Y
12	CQ-LC012 CQ-LCZ12	BS + 27.6	BS + 37.8	13.5	24	4.2	14.7	4.5	17	—	BS + 18.6	2	15.5	29.5	25	9.3	4.5
16	CQ-LC016 CQ-LCZ16	BS + 28.6	BS + 39.8	13.5	25.5	4.2	16.2	4.5	19	—	BS + 18.6	2	20	33.5	29	9.3	5
20	CQ-LC020 CQ-LCZ20	BS + 38	BS + 47.5	14.5	28.5	1.3	15.3	6.6	24	—	BS + 26.4	3.2	25.5	42	36	13.2	5.8
25	CQ-LC025 CQ-LCZ25	BS + 38	BS + 51.5	15	32.5	1.8	19.3	6.6	26	—	BS + 26.4	3.2	28	46	40	13.2	5.8
32	CQ-LC032	BS + 39	BS + 58	17	38.5	3.3	24.8	6.6	30	18.5	BS + 27.4	3.2	34	57	45	13.7	5.8
40	CQ-LC040	BS + 41.4	BS + 59.2	17	38.5	3.3	24.8	6.6	33	18.5	BS + 27.4	3.2	40	64	52	13.7	7
50	CQ-LC050	BS + 49.4	BS + 68.2	18	43.5	1.3	26.8	9	39	21	BS + 33.4	3.2	50	78	64	16.7	8
63	CQ-LC063	BS + 54.4	BS + 70.7	18	43.5	0.2	25.3	11	46	24	BS + 36.4	3.2	60	91.5	77	18.2	9
80	CQ-LC080	BS + 67	BS + 87	20	53.5	2.5	31	13	59	31	BS + 45	4.5	77	114	98	22.5	11
100	CQ-LC100	BS + 73	BS + 90	22	53.5	2	29.5	13	71	36	BS + 48	6	94	136	117	24	12.5

∗ For details on the rod end nut and accessory brackets ⇨ p. 34 to 36

Mounting Brackets

Rod flange

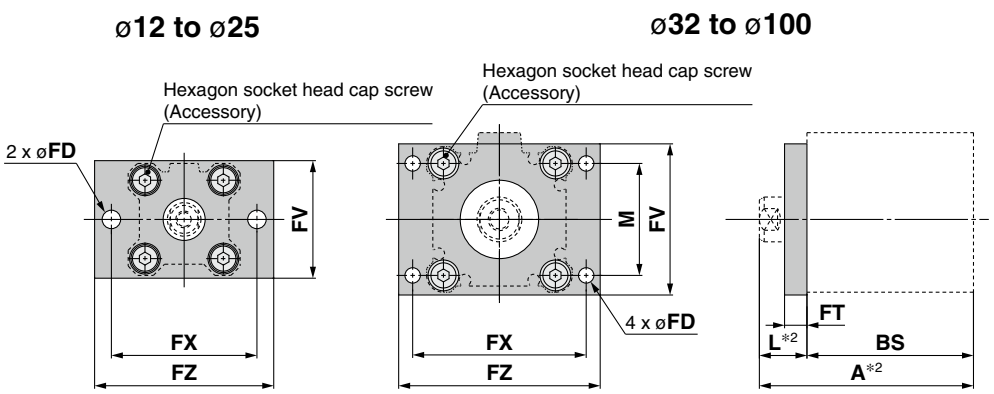

Rod end male thread

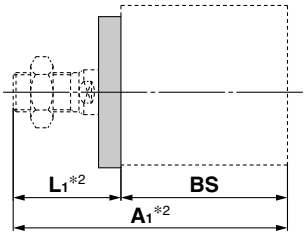

Head flange

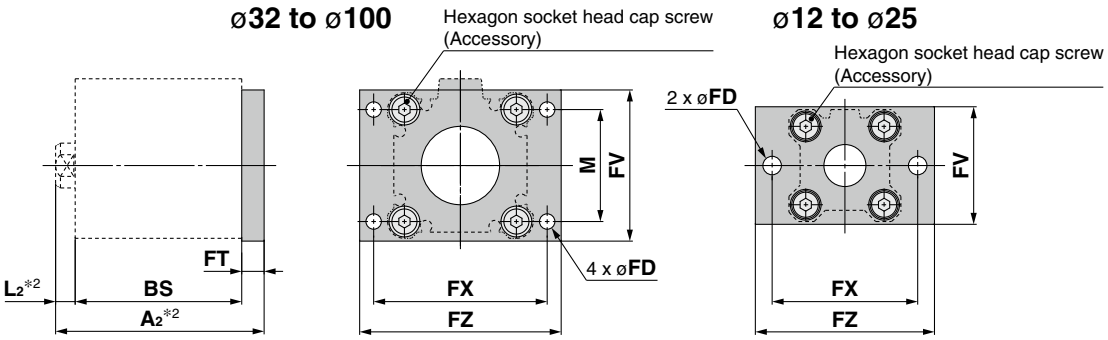

Rod end male thread

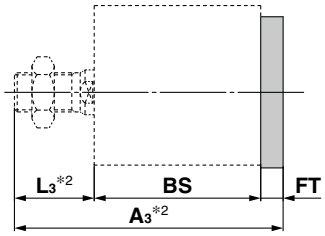

∗1 The flange bracket cannot be retrofitted for through-hole mounting (B).
∗2 This shows the piston rod in the retracted state. For the single acting, spring extend type (C D Q2□T), the length of the product will increase with the length of the stroke due to the spring force.

∗ BS indicates the overall length of the cylinder tube to be used.

Material: Carbon steel
Surface treatment: Nickel plating

[mm]

Bore size [mm]	Part no.	A	A_1	A_2	A_3	FD	FT	FV	FX	FZ	L	L_1	L_2	L_3	M
12	CQ-F012	BS + 13.5	BS + 24	BS + 9	BS + 19.5	4.5	5.5	25	45	55	13.5	24	3.5	14	—
16	CQ-F016	BS + 13.5	BS + 25.5	BS + 9	BS + 21	4.5	5.5	30	45	55	13.5	25.5	3.5	15.5	—
20	CQ-F020	BS + 14.5	BS + 28.5	BS + 12.5	BS + 26.5	6.6	8	39	48	60	14.5	28.5	4.5	18.5	—
25	CQ-F025	BS + 15	BS + 32.5	BS + 13	BS + 30.5	6.6	8	42	52	64	15	32.5	5	22.5	—
32	CQ-F032	BS + 17	BS + 38.5	BS + 15	BS + 36.5	5.5	8	48	56	65	17	38.5	7	28.5	34
40	CQ-F040	BS + 17	BS + 38.5	BS + 15	BS + 36.5	5.5	8	54	62	72	17	38.5	7	28.5	40
50	CQ-F050	BS + 18	BS + 43.5	BS + 17	BS + 42.5	6.6	9	67	76	89	18	43.5	8	33.5	50
63	CQ-F063	BS + 18	BS + 43.5	BS + 17	BS + 42.5	9	9	80	92	108	18	43.5	8	33.5	60
80	CQ-F080	BS + 20	BS + 53.5	BS + 21	BS + 54.5	11	11	99	116	134	20	53.5	10	43.5	77
100	CQ-F100	BS + 22	BS + 53.5	BS + 23	BS + 54.5	11	11	117	136	154	22	53.5	12	43.5	94

∗ For details on the rod end nut and accessory brackets ⇨ p. 34 to 36

Mounting Brackets

Double clevis

ø12 to ø25

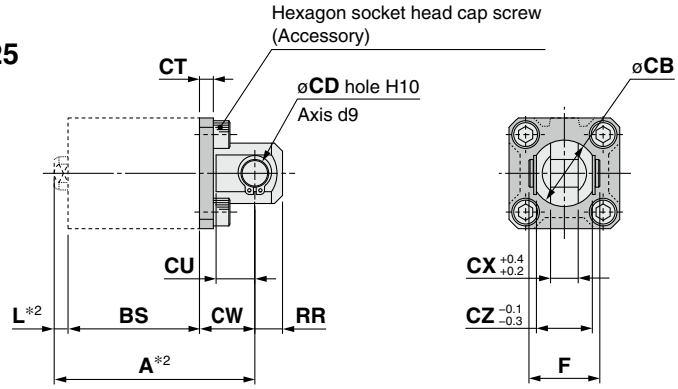

Rod end male thread

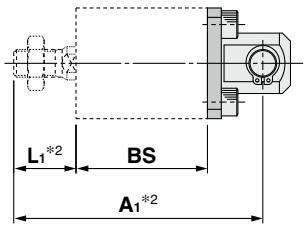

ø32 to ø100

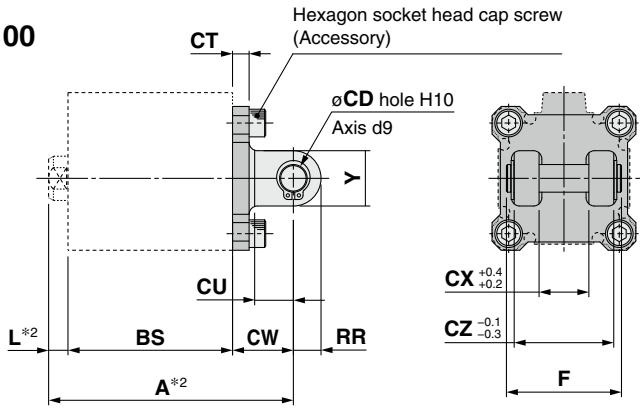

Rod end male thread

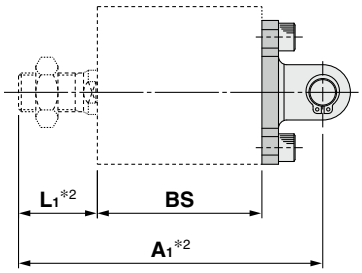

∗1 The double clevis bracket cannot be retrofitted for through-hole mounting (B).
∗2 This shows the piston rod in the retracted state. For the single acting, spring extend type (C□Q2□T), the length of the product will increase with the length of the stroke due to the spring force.

∗ BS indicates the overall length of the cylinder tube to be used.

ø12 to ø25
Material: Carbon steel, Surface treatment: Nickel plating
ø32 to ø100
Material: Cast iron, Surface treatment: Coating

[mm]

Bore size [mm]	Part no.	A	A_1	CB	CD	CT	CU	CW	CX	CZ	F	L	L_1	RR	Y
12	CQ-D012	BS + 17.5	BS + 28	12	5	4	7	14	5	10	14.6	3.5	14	6	—
16	CQ-D016	BS + 18.5	BS + 30.5	14	5	4	10	15	6.5	12	16.6	3.5	15.5	6	—
20	CQ-D020	BS + 22.5	BS + 36.5	20	8	5	12	18	8	16	21	4.5	18.5	9	—
25	CQ-D025	BS + 25	BS + 42.5	24	10	5	14	20	10	20	25.6	5	22.5	10	—
32	CQ-D032	BS + 27	BS + 48.5	—	10	5	14	20	18	36	41.6	7	28.5	10	20
40	CQ-D040	BS + 29	BS + 50.5	—	10	6	14	22	18	36	41.6	7	28.5	10	20
50	CQ-D050	BS + 36	BS + 61.5	—	14	7	20	28	22	44	50.6	8	33.5	14	28
63	CQ-D063	BS + 38	BS + 63.5	—	14	8	20	30	22	44	50.6	8	33.5	14	28
80	CQ-D080	BS + 48	BS + 81.5	—	18	10	27	38	28	56	64	10	43.5	18	36
100	CQ-D100	BS + 57	BS + 88.5	—	22	13	31	45	32	64	72	12	43.5	22	44

∗ For details on the rod end nut and accessory brackets ⇨ p. 34 to 36

Mounting Brackets

Double clevis pivot bracket

ø12 to ø25

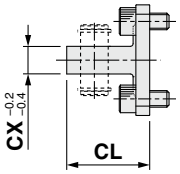

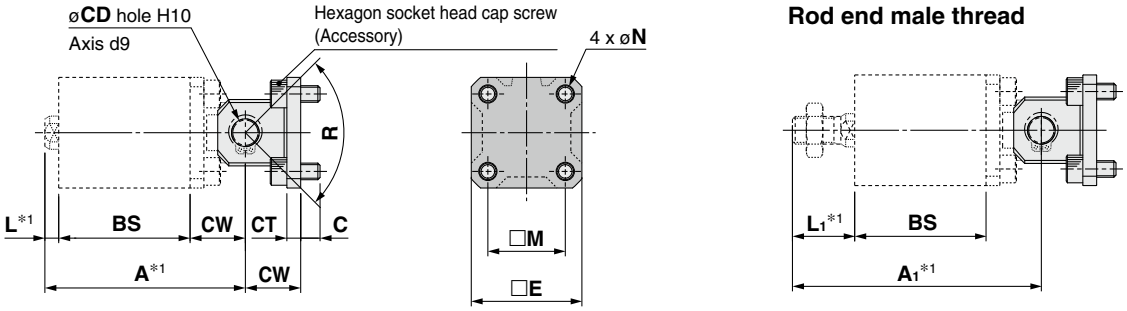

ø32 to ø100

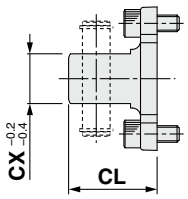

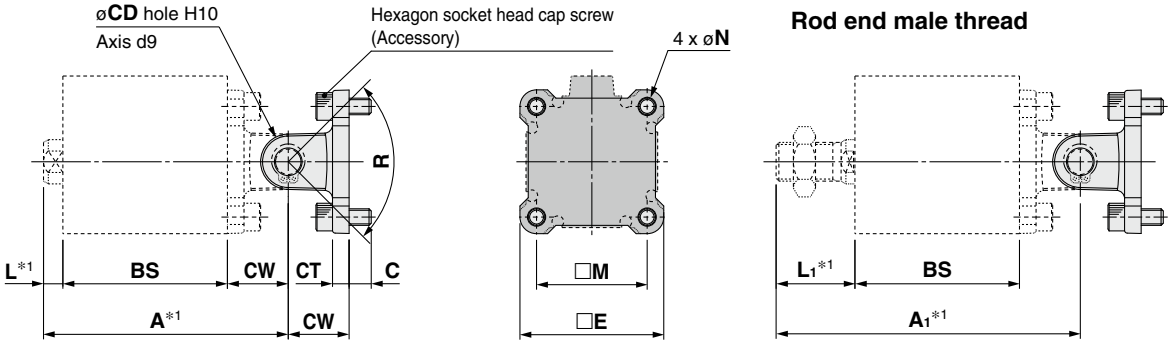

*1 This shows the piston rod in the retracted state. For the single acting, spring extend type (C[D]Q2□T), the length of the product will increase with the length of the stroke due to the spring force.

* BS indicates the overall length of the cylinder tube to be used.

ø12 to ø25
Material: Carbon steel, Surface treatment: Nickel plating
ø32 to ø100
Material: Cast iron, Surface treatment: Coating

[mm]

Bore size [mm]	Part no.	A	A_1	C	CD	CL	CT	CW	CX	□E	L	L_1	□M	N	R	Hexagon socket head cap screw size	Weight [g]
12	CQ-C012	BS + 17.5	BS + 28	6	5	19	4	14	5	25	3.5	14	15.5	4.5	100°	M4 x 10 L	30
16	CQ-C016	BS + 18.5	BS + 30.5	6	5	21	4	15	6.5	28	3.5	15.5	20	4.5	100°	M4 x 10 L	40
20	CQ-C020	BS + 22.5	BS + 36.5	7	8	27	5	18	8	35	4.5	18.5	25.5	6.6	80°	M6 x 12 L	86
25	CQ-C025	BS + 25	BS + 42.5	7	10	30	5	20	10	40	5	22.5	28	6.6	90°	M6 x 12 L	115
32	CQ-C032	BS + 27	BS + 48.5	7	10	30	5	20	18	45	7	28.5	34	6.6	80°	M6 x 12 L	112
40	CQ-C040	BS + 29	BS + 50.5	8	10	32	6	22	18	52	7	28.5	40	6.6	80°	M6 x 14 L	147
50	CQ-C050	BS + 36	BS + 61.5	9	14	42	7	28	22	64	8	33.5	50	9	80°	M8 x 16 L	294
63	CQ-C063	BS + 38	BS + 63.5	12	14	44	8	30	22	77	8	33.5	60	11	60°	M10 x 20 L	448
80	CQ-C080	BS + 48	BS + 81.5	15	18	56	10	38	28	98	10	43.5	77	13.5	70°	M12 x 25 L	884
100	CQ-C100	BS + 57	BS + 88.5	17	22	67	13	45	32	117	12	43.5	94	13.5	70°	M12 x 30 L	1516

* For details on the rod end nut and accessory brackets ⇨ p. 34 to 36

Single Knuckle Joint

I-G012, I-G016
I-G02, I-G03

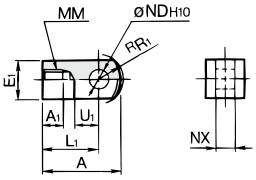

Material: Carbon steel
Surface treatment: Nickel plating

I-G04, I-G05
I-G08, I-G10

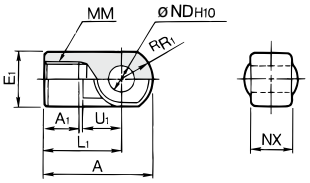

Material: Cast iron
Surface treatment: Zinc chromated

[mm]

Bore size [mm]	Part no.	A	A_1	E_1	L_1	MM	$^{R}R_1$	U_1	ND_{H10}	NX	Weight [g]
12	**I-G012**	21.5	6	□10	16	M5 x 0.8	6.3	7	$5^{+0.048}_{0}$	$5^{-0.2}_{-0.4}$	9
16	**I-G016**	32	8	□12	25	M6 x 1	8.1	14	$5^{+0.048}_{0}$	$6.4^{-0.1}_{-0.3}$	9
20	**I-G02**	34	8.5	□16	25	M8 x 1.25	10.3	11.5	$8^{+0.058}_{0}$	$8^{-0.2}_{-0.4}$	38
25	**I-G03**	41	10.5	□20	30	M10 x 1.25	12.8	14	$10^{+0.058}_{0}$	$10^{-0.2}_{-0.4}$	70
32, 40	**I-G04**	42	14	ø22	30	M14 x 1.5	12	14	$10^{+0.058}_{0}$	$18^{-0.3}_{-0.5}$	75
50, 63	**I-G05**	56	18	ø28	40	M18 x 1.5	16	20	$14^{+0.070}_{0}$	$22^{-0.3}_{-0.5}$	163
80	**I-G08**	71	21	ø38	50	M22 x 1.5	21	27	$18^{+0.070}_{0}$	$28^{-0.3}_{-0.5}$	370
100	**I-G10**	79	21	ø44	55	M26 x 1.5	24	31	$22^{+0.084}_{0}$	$32^{-0.3}_{-0.5}$	544

Double Knuckle Joint

Y-G012, Y-G016
Y-G02, Y-G03

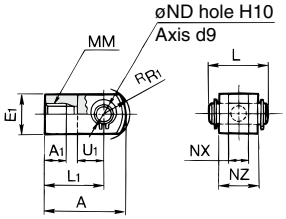

Material: Carbon steel
Surface treatment: Nickel plating

Y-G04, Y-G05
Y-G08, Y-G10

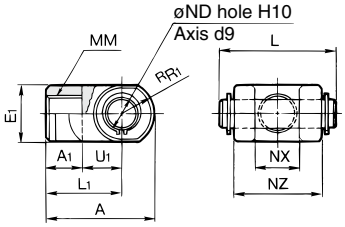

Material: Cast iron
Surface treatment: Zinc chromated

[mm]

Bore size [mm]	Part no.	A	A_1	E_1	L_1	MM	$^{R}R_1$	U_1	ND_{H10}	NX	NZ	L	Applicable pin part no.	Weight [g]
12	**Y-G012**	21.5	6	□10	16	M5 x 0.8	6.3	7	$5^{+0.048}_{0}$	$5^{+0.4}_{+0.2}$	10	14.6	IY-G012	11
16	**Y-G016**	28	11	□12	21	M6 x 1	8.1	10	$5^{+0.048}_{0}$	$6.5^{+0.2}_{+0}$	12	16.6	IY-J015	11
20	**Y-G02**	34	8.5	□16	25	M8 x 1.25	10.3	11.5	$8^{+0.058}_{0}$	$8^{+0.4}_{+0.2}$	16	21	IY-G02	45
25	**Y-G03**	41	10.5	□20	30	M10 x 1.25	12.8	14	$10^{+0.058}_{0}$	$10^{+0.4}_{+0.2}$	20	25.6	IY-G03	86
32, 40	**Y-G04**	42	16	ø22	30	M14 x 1.5	12	14	$10^{+0.058}_{0}$	$18^{+0.5}_{+0.3}$	36	41.6	IY-G04	121
50, 63	**Y-G05**	56	20	ø28	40	M18 x 1.5	16	20	$14^{+0.070}_{0}$	$22^{+0.5}_{+0.3}$	44	50.6	IY-G05	253
80	**Y-G08**	71	23	ø38	50	M22 x 1.5	21	27	$18^{+0.070}_{0}$	$28^{+0.5}_{+0.3}$	56	64	IY-G08	568
100	**Y-G10**	79	24	ø44	55	M26 x 1.5	24	31	$22^{+0.084}_{0}$	$32^{+0.5}_{+0.3}$	64	72	IY-G10	838

∗ Knuckle pin and retaining rings are included.

Knuckle Pin (Common with double clevis pin)

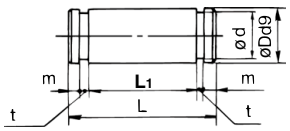

Material: Carbon steel
(Other than ø16)
Stainless steel (ø16)

[mm]

Bore size [mm]	Part no.	Dd9	L	d	L_1	m	t	Applicable retaining ring	Weight [g]
12	**IY-G012**	$5^{-0.030}_{-0.060}$	14.6	4.8	10.2	1.5	0.7	Type C5 for axis	2
16	**IY-J015**	$5^{-0.030}_{-0.060}$	16.6	4.8	12.2	1.5	0.7	Type C5 for axis	3
20	**IY-G02**	$8^{-0.040}_{-0.076}$	21	7.6	16.2	1.5	0.9	Type C8 for axis	8
25	**IY-G03**	$10^{-0.040}_{-0.076}$	25.6	9.6	20.2	1.55	1.15	Type C10 for axis	16
32, 40	**IY-G04**	$10^{-0.040}_{-0.076}$	41.6	9.6	36.2	1.55	1.15	Type C10 for axis	25
50, 63	**IY-G05**	$14^{-0.050}_{-0.093}$	50.6	13.4	44.2	2.05	1.15	Type C14 for axis	60
80	**IY-G08**	$18^{-0.050}_{-0.093}$	64	17	56.2	2.55	1.35	Type C18 for axis	126
100	**IY-G10**	$22^{-0.065}_{-0.117}$	72	21	64.2	2.55	1.35	Type C22 for axis	212

∗ Type C retaining rings for axis are included.

Rod End Nut

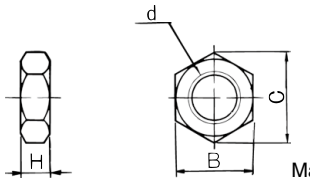

Material: Carbon steel
Surface treatment: Zinc chromated (ø12 to ø100)
Nickel plating (ø125 to ø200)

[mm]

Bore size [mm]	Part no.	d	H	B	C	Weight [g]
12	**NTJ-015C**	M5 x 0.8	4	8	9.2	1
16	**NT-015A**	M6 x 1	5	10	11.5	2
20	**NT-02**	M8 x 1.25	5	13	15.0	4
25	**NT-03**	M10 x 1.25	6	17	19.6	8
32, 40	**NT-04**	M14 x 1.5	8	22	25.4	17
50, 63	**NT-05**	M18 x 1.5	11	27	31.2	32
80	**NT-08**	M22 x 1.5	13	32	37.0	49
100	**NT-10**	M26 x 1.5	16	41	47.3	116
125, 140	**NT-12**	M30 x 1.5	18	46	53.1	160
160, 180, 200	**NT-16**	M36 x 1.5	21	55	63.5	230

Rod End Bracket, Rod End Nut Material: Stainless Steel

Part Nos. (Dimensions: Same as the standard type)

Bore size [mm]	Single knuckle joint	Double knuckle joint∗1	Knuckle joint pin	Rod end nut
20	I-G02SUS	Y-G02SUS	IY-G02SUS	NT-02SUS
25	I-G03SUS	Y-G03SUS	IY-G03SUS	NT-03SUS
32, 40	I-G04SUS	Y-G04SUS	IY-G04SUS	NT-G04SUS
50, 63	I-G05SUS	Y-G05SUS	IY-G05SUS	NT-05SUS
80	I-G08SUS	Y-G08SUS	IY-G08SUS	NT-08SUS
100	I-G10SUS	Y-G10SUS	IY-G10SUS	NT-10SUS

∗1 A knuckle pin and retaining rings are included with the double knuckle joint. Retaining rings are included with the knuckle joint pin.

Simple Joint (CQ2): ø12 to ø100

Joint/Mounting Bracket (Type A/B) Part Nos.

Bore size [mm]	Joint	Type A mounting bracket	Type B mounting bracket
12	YU-012	YA-012	YB-012
16	YU-016	YA-016	YB-016
20	YU-020	YA-020	YB-020
25	YU-025	YA-025	YB-025
32, 40	YU-03	YA-03	YB-03
50, 63	YU-05	YA-05	YB-05
80	YU-08	YA-08	YB-08
100	YU-10	YA-10	YB-10

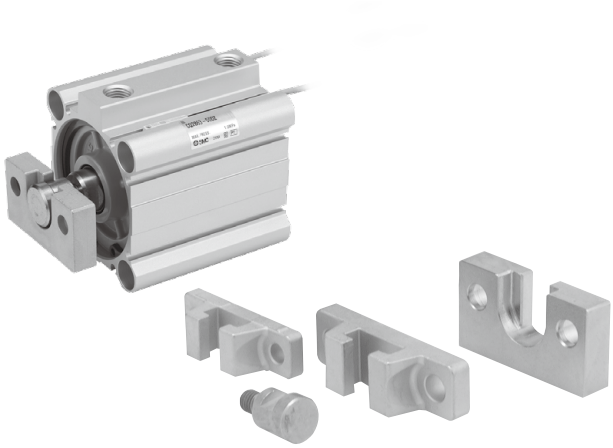

<Ordering>
Joints are not included with type A or B mounting brackets.
Order them separately.
(Example)
Bore size ø40 Part no.
• Type A mounting bracket ····· YA-03
• Joint ····· YU-03

Allowable Eccentricity

[mm]

Bore size [mm]	12	16	20	25	32	40	50	63	80	100
Eccentricity tolerance	±0.5				±1				±1.5	±2
Axial direction backlash	0.5									

Type A Mounting Bracket

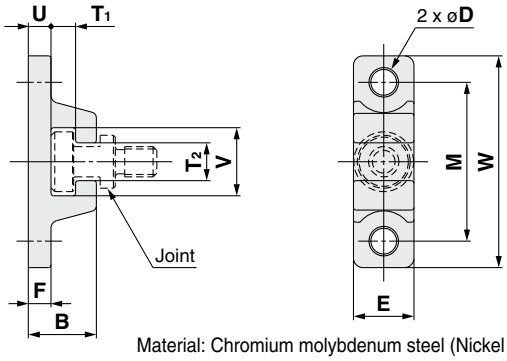

Material: Chromium molybdenum steel (Nickel plating)

[mm]

Bore size [mm]	Part no.	B	D	E	F	M	T_1	T_2
12	**YA-012**	8	3.5	10	3	20	2.5	4
16	**YA-016**	8	3.5	10	3	24	2.5	5
20	**YA-020**	12	4.5	13	5	30	3.5	6
25	**YA-025**	12.5	5.5	15	5	33	3.5	7
32, 40	**YA-03**	18	6.8	16	6	42	6.5	10
50, 63	**YA-05**	20	9	20	8	50	6.5	12
80	**YA-08**	26	11	25	10	62	8.5	16
100	**YA-10**	31	14	30	12	76	10.5	18

Bore size [mm]	Part no.	U	V	W	Weight [g]
12	**YA-012**	3	8.5	30	9
16	**YA-016**	3	11	34	11
20	**YA-020**	5	13.5	42	27
25	**YA-025**	5	16.5	45	34
32, 40	**YA-03**	6	18	56	55
50, 63	**YA-05**	8	22	67	100
80	**YA-08**	10	28	83	195
100	**YA-10**	12	36	100	340

Type B Mounting Bracket

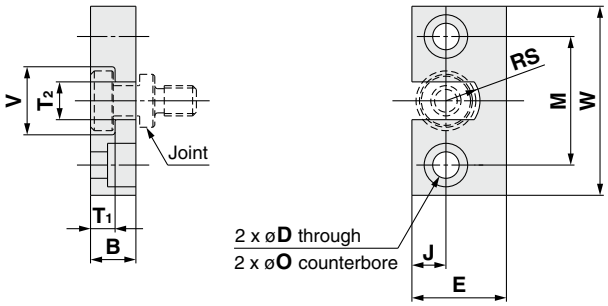

Material: Stainless steel

[mm]

Bore size [mm]	Part no.	B	D	E	J	M	O
12	**YB-012**	5	3.5	14	5	17	—
16	**YB-016**	5	3.5	16	6	20	—
20	**YB-020**	7	4.5	18	7	25.5	—
25	**YB-025**	7.5	5.5	20	8	28	—
32, 40	**YB-03**	12	7	25	9	34	11.5 depth 7.5
50, 63	**YB-05**	12	9	32	11	42	14.5 depth 8.5
80	**YB-08**	16	11	38	13	52	18 depth 12
100	**YB-10**	19	14	50	17	62	21 depth 14

Bore size [mm]	Part no.	T_1	T_2	V	W	RS	Weight [g]
12	**YB-012**	2.5	4	8.6	25	2	11
16	**YB-016**	2.5	5	11	29	2.5	15
20	**YB-020**	3.5	6	13.6	36	3	28
25	**YB-025**	3.5	7	16.6	40	3.5	36
32, 40	**YB-03**	6.5	10	18	50	9	80
50, 63	**YB-05**	6.5	12	22	60	11	120
80	**YB-08**	8.5	16	28	75	14	230
100	**YB-10**	10.5	18	36	90	18	455

Joint

YU-012, YU-016
YU-020, YU-025

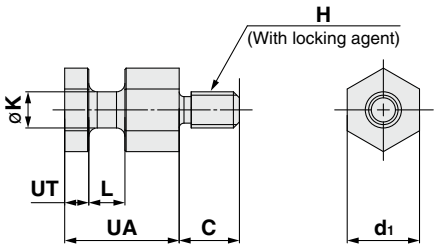

YU-03, YU-05
YU-08, YU-10

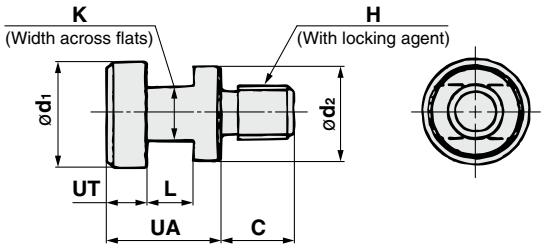

Material: Chromium molybdenum steel (Nickel plating)
[mm]

Bore size [mm]	Part no.	UA	C	d_1	d_2	H	K	L	UT	Weight [g]
12	**YU-012**	9.5	5	6	—	M3 x 0.5	3	3	2	2
16	**YU-016**	9.5	7	8	—	M4 x 0.7	4	3	2	4
20	**YU-020**	11.5	6	10	—	M5 x 0.8	5	4	3	7
25	**YU-025**	12	11	12	—	M6 x 1.0	6	4.5	3	11
32, 40	**YU-03**	17	11	15.8	14	M8 x 1.25	8	7	6	25
50, 63	**YU-05**	17	13	19.8	18	M10 x 1.5	10	7	6	40
80	**YU-08**	22	20	24.8	23	M16 x 2	13	9	8	90
100	**YU-10**	26	26	29.8	28	M20 x 2.5	14	11	10	160

Compact Cylinder: Standard Double Acting, Double Rod

CQ2W Series

ø12, ø16, ø20, ø25, ø32, ø40, ø50, ø63, ø80, ø100

How to Order

Without auto switch ø12 to ø25

CQ2W B ☐ 20 ☐ – 30 D ☐ — ☐

Without auto switch ø32 to ø100

CQ2W B ☐ 32 ☐ – 30 D ☐ Z – ☐

With auto switch

CDQ2W B ☐ 32 ☐ – 30 D M Z – M9BW ☐ – ☐

❶ ❷ ❸ ❹ ❺ ❻ ❼ ❽ ❾ ❿ ⓫

With auto switch magnet
The overall length of the cylinder with an auto switch magnet is longer than that of the cylinder without an auto switch magnet by the length of the built-in magnet. For details, refer to the dimensions of each size.

❶ Mounting

B	Through-hole
A	Both ends tapped
L	Foot
LC	Compact foot
F	Flange

∗ Mounting brackets are shipped together with the product but do not come assembled.
∗ A through-hole type mounting bolt is available as an option. For details ⇨ p. 42
∗ For cylinders with mounting options "L," "LC," or "F," the cylinder rod protrusion dimensions (Dimensions L and L_1) vary from the standard cylinder. When only ordering the cylinder, order the rod end length increased by 10 mm (-XC2) cylinder.
For details ⇨ p. 178

❷ Type

Nil	Pneumatic
H	Air-hydro∗1

∗1 The bore sizes available for the air-hydro type are ø20 to ø100.

❸ Bore size

12	12 mm
16	16 mm
20	20 mm
25	25 mm
32	32 mm
40	40 mm
50	50 mm
63	63 mm
80	80 mm
100	100 mm

❹ Port thread type

Nil	M thread	ø12 to ø25
	Rc	ø32 to ø100
TN	NPT	
TF	G	
F	Built-in One-touch fittings∗1	

∗1 The bore sizes available with One-touch fittings are ø32 to ø63. However, they cannot be selected for the air-hydro type.
∗ "TF" is not selectable for the air-hydro type.
∗ For cylinders without an auto switch magnet, M threads are compatible only with ø32-5 mm stroke.

❺ Cylinder stroke (For details on the minimum stroke for auto switch mounting ⇨ p. 157)

[mm]

Bore size	Standard stroke
12, 16	5, 10, 15, 20, 25, 30
20, 25	5, 10, 15, 20, 25, 30, 35, 40, 45, 50
32, 40	5, 10, 15, 20, 25, 30, 35, 40, 45, 50, 75, 100
50, 63, 80, 100	10, 15, 20, 25, 30, 35, 40, 45, 50, 75, 100

∗ For the manufacturing of intermediate strokes ⇨ p. 39
∗ The bore sizes available for the air-hydro type are ø20 to ø100.

❻ Action

D	Double acting

❼ Body option

Nil	Rod end female thread
C	With rubber bumper∗1
M	Rod end male thread

∗1 The type with a rubber bumper is not selectable for the air-hydro type.
∗ Combined body options "CM" can be selected.

❽ Auto switch mounting groove

Z	ø12 to ø25	2 surfaces
	ø32 to ø100	4 surfaces

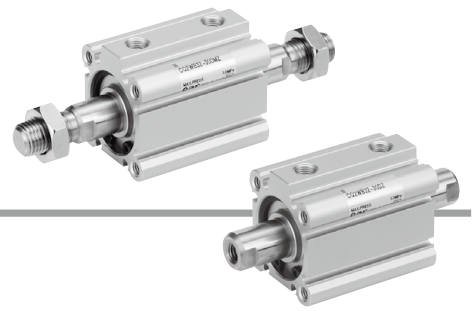

❾ Auto switch

Nil	Without auto switch

∗ For applicable auto switches, refer to the table below.

❿ Number of auto switches

Nil	2
S	1
n	n

⓫ Made to order common specifications

For details ⇨ p. 39

Cylinder Model with Auto Switch Magnet

If a cylinder with an auto switch magnet and without an auto switch is required, there is no need to enter the symbol for the auto switch.
(Example) CDQ2WL32-25DZ

For details on **auto switch mounting** ⇨ p. 149 to 165

- Auto Switch Proper Mounting Position (Detection at stroke end) and Mounting Height
- Minimum Stroke for Auto Switch Mounting
- Operating Range
- Auto Switch Mounting Brackets/Part Nos.

Applicable Auto Switches / Refer to the **Web Catalog** for further information on auto switches.

Type	Special function	Electrical entry	Indicator light	Wiring (Output)	Load voltage DC		Load voltage AC	Auto switch model Perpendicular	Auto switch model In-line	Lead wire length [m] 0.5 (Nil)	1 (M)	3 (L)	5 (Z)	None (N)	Pre-wired connector	Applicable load	
Solid state auto switch	——	Grommet	Yes	3-wire (NPN)	24 V	5 V, 12 V	—	**M9NV**	**M9N**	●	●	●	○	—	○	IC circuit	Relay, PLC
				3-wire (PNP)				**M9PV**	**M9P**	●	●	●	○	—	○		
				2-wire		12 V		**M9BV**	**M9B**	●	●	●	○	—	○	—	
	Diagnostic indication (2-color indicator)			3-wire (NPN)		5 V, 12 V		**M9NWV**	**M9NW**	●	●	●	○	—	○	IC circuit	
				3-wire (PNP)				**M9PWV**	**M9PW**	●	●	●	○	—	○		
				2-wire		12 V		**M9BWV**	**M9BW**	●	●	●	○	—	○	—	
	Water resistant (2-color indicator)			3-wire (NPN)		5 V, 12 V		**M9NAV**∗1	**M9NA**∗1	○	○	●	○	—	○	IC circuit	
				3-wire (PNP)				**M9PAV**∗1	**M9PA**∗1	○	○	●	○	—	○		
				2-wire		12 V		**M9BAV**∗1	**M9BA**∗1	○	○	●	○	—	○	—	
	Magnetic field resistant (2-color indicator)			2-wire (Non-polar)		—		—	**P3DWA**	●	—	●	●	—	○		
Reed auto switch	——	Grommet	Yes	3-wire (NPN equivalent)	—	5 V	—	**A96V**	**A96**	●	●	●	●	—	○	IC circuit	—
				2-wire	24 V	12 V	100 V	**A93V**	**A93**	●	●	●	●	—	○∗2	—	Relay, PLC
			No			5 V, 12 V	100 V or less	**A90V**	**A90**	●	●	●	●	—	○∗2	IC circuit	

∗1 Water-resistant type auto switches can be mounted on the models on page 37, but SMC cannot guarantee water resistance.
Please contact SMC regarding water-resistant types with the model numbers on page 37.
∗2 The load voltage used is 24 VDC.

∗ Lead wire length symbols: 0.5 m ····· Nil (Example) M9NW
1 m ····· M (Example) M9NWM
3 m ····· L (Example) M9NWL
5 m ····· Z (Example) M9NWZ

∗ Auto switches marked with a "○" are produced upon receipt of order.
∗ The D-P3DWA□ type is only available in sizes ø25 to ø100.

∗ There are applicable auto switches other than those listed above. For details ⇨ p. 165

Symbol

Without cushion

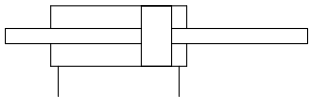

Rubber bumper

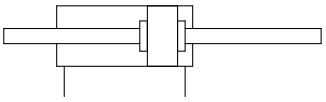

Made to Order

Made to Order Common Specifications
(For details ⇨ p. 167 to 196)

Symbol	Specifications
-XA□	Change of rod end shape
-XB6	Heat-resistant cylinder (–10 to 150°C) w/o auto switch only*1
-XB7	Cold-resistant cylinder (–40 to 70°C) w/o auto switch only
-XB9	Low-speed cylinder (10 to 50 mm/s)
-XB10	Intermediate stroke (Exclusive body type)
-XB13	Low-speed cylinder (5 to 50 mm/s)
-XC2(A)	Rod end length increased by 10 mm (For foot and flange bracket)
-XC4	With heavy duty scraper
-XC6	Piston rod/Retaining ring/Rod end nut material: Stainless steel
-XC35	With coil scraper
-XC36	With boss on rod end
-XC85	Grease for food processing equipment
-X144	Special port location, with auto switch
-X235	Special rod end for double rod cylinder
-X271	Fluororubber seals*1
-X633	Intermediate stroke for double rod cylinder

*1 Excludes the air-hydro type

* Stainless steel accessories are also available. For details ⇨ p. 34

Moisture Control Tube
IDK Series

When operating an actuator with a small bore size and a short stroke at a high frequency, dew condensation (water droplets) may occur inside the piping depending on the conditions.
Simply connecting the moisture control tube to the actuator will prevent dew condensation from occurring. For details, refer to the **Web Catalog**.

Specifications

Pneumatic type

Bore size [mm]		12	16	20	25	32	40	50	63	80	100
Action		Double acting, Double rod									
Fluid		Air									
Proof pressure		1.5 MPa									
Maximum operating pressure		1.0 MPa									
Minimum operating pressure		0.07 MPa	0.05 MPa								
Ambient and fluid temperatures		Without auto switch magnet: –10 to 70°C With auto switch magnet: –10 to 60°C (No freezing)									
Lubrication		Not required (Non-lube)									
Piston speed		50 to 500 mm/s									
Cushion		Without cushion or With rubber bumper									
Allowable kinetic energy [J]	**Without cushion**	0.022	0.038	0.055	0.09	0.15	0.26	0.46	0.77	1.36	2.27
	With rubber bumper	0.043	0.075	0.11	0.18	0.29	0.52	0.91	1.54	2.71	4.54
Stroke length tolerance		$^{+1.0}_{0}$ mm*1									

*1 Stroke length tolerance does not include the amount of bumper change.

Air-hydro type

Bore size [mm]	20	25	32	40	50	63	80	100
Action	Double acting, Double rod							
Fluid	Turbine oil*1							
Proof pressure	1.5 MPa							
Maximum operating pressure	1.0 MPa							
Minimum operating pressure	0.18 MPa			0.1 MPa				
Ambient and fluid temperatures	5 to 60°C							
Piston speed	5 to 50 mm/s							
Cushion	None							
Stroke length tolerance	$^{+1.0}_{0}$ mm							

*1 Actuator Precautions 5 ⇨ Refer to the **Web Catalog**.

Manufacturing of Intermediate Strokes

Type	A spacer is installed in the standard stroke body. (5 mm increments)		A spacer is installed in the standard stroke body. (1 mm increments)		Exclusive body (-XB10)	
Part no.	Refer to "How to Order" for the standard model number. (⇨ p. 37)		Suffix "-X633" (p. 194) to the end of standard model number. (⇨ p. 37)		Suffix "-XB10" to the end of standard model number. (⇨ p. 37)	
Description	Strokes in 5 mm increments are available by installing a spacer in the standard stroke cylinder.		Strokes in 1 mm increments are available by installing a spacer in the standard stroke cylinder.		Strokes in 1 mm increments are available by using an exclusive body with the specified stroke.	
Stroke range	Bore size	Stroke range	Bore size	Stroke range	Bore size	Stroke range
	—	—	12, 16	6 to 29	12, 16	6 to 29
			20, 25	6 to 49	20, 25	6 to 49
	32 to 100	55 to 95	32, 40	6 to 99	32, 40	6 to 99
			50 to 100	11 to 99	50 to 100	11 to 99
Example	Part no.: CQ2WB50-65DZ CQ2WB50-75DZ with 10 mm width spacer inside The B dimension is 125.5 mm.		Part no.: CQ2WB50-72DZ-X633 CQ2WB50-75DZ with 3 mm width spacer inside The B dimension is 125.5 mm.		Part no.: CQ2WB50-65DZ-XB10 Makes 65 mm stroke tube. The B dimension is 115.5 mm.	

- Excludes the air-hydro type
- In the case of spacer type, intermediate strokes with bumper for ø40 to ø100, "-X633" is not available.
- In the case of exclusive body type with ø32 to ø100 (-XB10) with the stroke length exceeding 50 mm, reference values of the longitudinal dimension will be changed.
  Calculate length dimensions by deducting from those of 75 or 100 mm stroke models.

⚠ Precautions

Refer to pages 197 and 198 before handling the products.

Mounting Bracket Part Nos.

Bore size [mm]		Foot*1	Compact foot*1	Flange
12	Without auto switch magnet	CQ-L012	CQ-LC012	CQ-F012
	With auto switch magnet	CQ-LZ12	CQ-LCZ12	
16	Without auto switch magnet	CQ-L016	CQ-LC016	CQ-F016
	With auto switch magnet	CQ-LZ16	CQ-LCZ16	
20	Without auto switch magnet	CQ-L020	CQ-LC020	CQ-F020
	With auto switch magnet	CQ-LZ20	CQ-LCZ20	
25	Without auto switch magnet	CQ-L025	CQ-LC025	CQ-F025
	With auto switch magnet	CQ-LZ25	CQ-LCZ25	
32		CQ-L032	CQ-LC032	CQ-F032
40		CQ-L040	CQ-LC040	CQ-F040
50		CQ-L050	CQ-LC050	CQ-F050
63		CQ-L063	CQ-LC063	CQ-F063
80		CQ-L080	CQ-LC080	CQ-F080
100		CQ-L100	CQ-LC100	CQ-F100

*1 When ordering foot and compact foot brackets, the required quantity will be different depending on the bore size.
ø12 to ø25:
· Without auto switch magnet: Order 2 pieces per cylinder.
· With auto switch magnet: Order 1 piece per cylinder. (Part number for a set of 2 foot brackets)
ø32 to ø100:
· Order 2 pieces per cylinder.

* Parts included with each type of bracket are as follows.
Foot, Compact foot, Flange: Body mounting bolts
* For details on accessory brackets (Options) ⇨ p. 29 to 36
* Foot, compact foot, flange brackets, etc., cannot be retrofitted for through-hole mounting (B).

Allowable Lateral Load at Rod End

Without Auto Switch Magnet

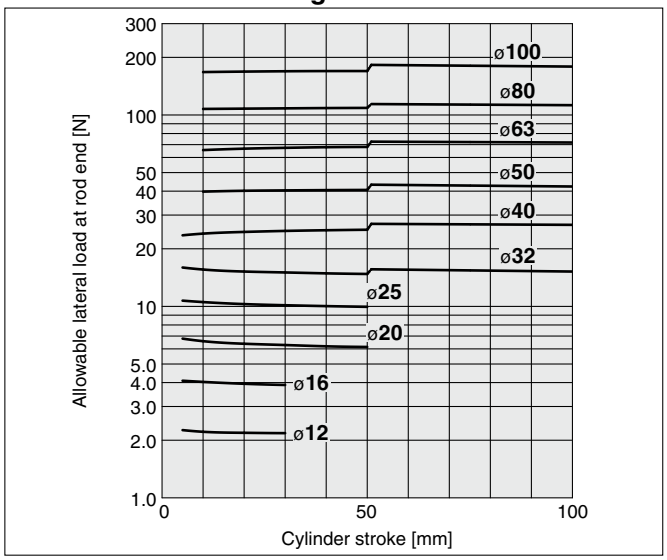

With Auto Switch Magnet

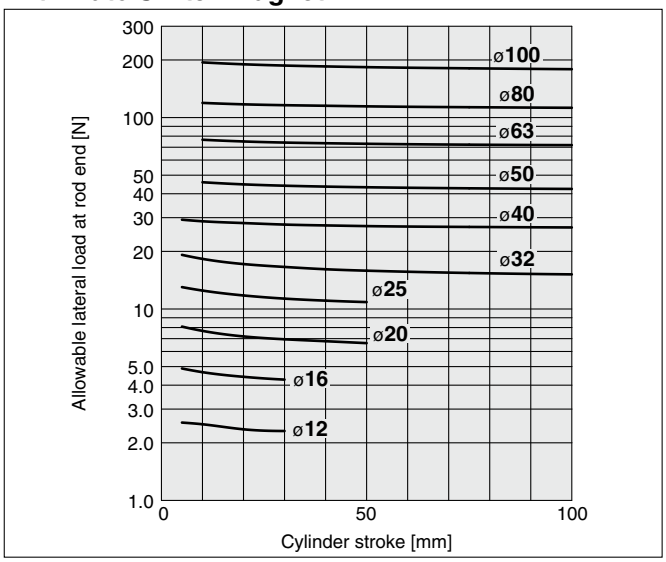

Theoretical Output

[N]

Bore size [mm]	Operating pressure [MPa]		
	0.3	0.5	0.7
12	25	42	59
16	45	75	106
20	71	118	165
25	113	189	264
32	181	302	422
40	317	528	739
50	495	825	1150
63	841	1400	1960
80	1360	2270	3170
100	2140	3570	5000

Weight

Without Auto Switch Magnet

[g]

Bore size [mm]	Cylinder stroke [mm]											
	5	10	15	20	25	30	35	40	45	50	75	100
12	42	49	56	63	70	77	—	—	—	—	—	—
16	59	68	77	86	95	104	—	—	—	—	—	—
20	89	104	119	134	149	164	179	194	209	224	—	—
25	119	136	153	170	187	204	221	238	255	272	—	—
32	185	212	235	257	280	303	326	349	372	395	555	670
40	279	308	337	367	396	426	455	484	514	543	749	896
50	—	497	538	580	622	664	705	747	789	830	1122	1331
63	—	646	682	718	754	790	826	862	899	935	1187	1368
80	—	1149	1225	1302	1378	1455	1531	1608	1684	1760	2296	2678
100	—	1960	2068	2177	2286	2394	2503	2612	2720	2829	3589	4132

Additional Weight

[g]

Bore size [mm]		**12**	**16**	**20**	**25**	**32**	**40**	**50**	**63**	**80**	**100**
Both ends tapped		2	2	6	6	6	6	6	19	45	45
Rod end male thread	Male thread	3	6	12	24	52	54	106	106	240	350
	Nut	2	4	8	16	34	34	64	64	98	232
With rubber bumper		0	0	–2	–2	–3	–7	–12	–20	–34	–57
Built-in One-touch fittings		—	—	—	—	12	12	21	21	—	—
Foot (Including mounting bolts)		52	66	156	184	136	154	243	321	627	1023
Compact foot (Including mounting bolts)		39	50	122	143	110	124	197	259	531	818
Flange (Including mounting bolts)		57	69	139	161	180	214	373	559	1056	1365

Calculation: (Example) **CQ2WF32-20DCMZ**

- Basic weight: CQ2WB32-20DZ ····· 257 g
- Additional weight: Both ends tapped ····· 6 g
  - Rod end male thread ····· 86 g
  - With rubber bumper ····· –3 g
  - Flange ····· 180 g

526 g

With Auto Switch Magnet

[g]

Bore size [mm]	Cylinder stroke [mm]											
	5	10	15	20	25	30	35	40	45	50	75	100
12	50	58	65	73	80	87	—	—	—	—	—	—
16	77	87	96	106	115	125	—	—	—	—	—	—
20	120	136	151	166	182	197	212	228	243	258	—	—
25	170	185	201	216	232	247	263	279	294	310	—	—
32	238	260	283	306	329	352	375	398	421	444	558	673
40	353	383	412	442	471	500	530	559	589	618	765	912
50	—	609	645	681	716	752	788	823	859	895	1073	1252
63	—	798	840	882	924	966	1008	1051	1093	1135	1346	1556
80	—	1393	1469	1546	1622	1699	1775	1851	1928	2004	2387	2769
100	—	2334	2443	2551	2660	2769	2877	2986	3094	3203	3746	4289

Additional Weight

[g]

Bore size [mm]		**12**	**16**	**20**	**25**	**32**	**40**	**50**	**63**	**80**	**100**
Both ends tapped		1	1	3	3	6	6	6	19	45	45
Rod end male thread	Male thread	3	6	12	24	52	54	106	106	240	350
	Nut	2	4	8	16	34	34	64	64	98	232
With rubber bumper		0	0	–2	–2	–3	–7	–12	–19	–34	–54
Built-in One-touch fittings		—	—	—	—	12	12	21	21	—	—
Foot (Including mounting bolts)		43	57	132	158	136	154	243	321	627	1023
Compact foot (Including mounting bolts)		32	42	100	122	110	124	197	259	531	818
Flange (Including mounting bolts)		54	67	131	153	180	214	373	559	1056	1365

Calculation: (Example) **CDQ2WF32-20DCMZ**

- Basic weight: CDQ2WB32-20DZ ····· 306 g
- Additional weight: Both ends tapped ····· 6 g
  - Rod end male thread ····· 86 g
  - With rubber bumper ····· –3 g
  - Rod flange ····· 180 g

575 g

Add each weight of auto switches when auto switches are mounted.

Through-hole Type Mounting Bolt for the CQ2W: Without Auto Switch Magnet

Mounting bolt for the through-hole mounting of the CQ2WB is available as an option.
Refer to the following for ordering procedures.
Order the actual number of bolts that will be used.

Example) CQ-M3 x 35L 4 pcs.

Type: Hexagon socket head cap screw
Material: Chromium molybdenum steel
Surface treatment: Zinc chromated

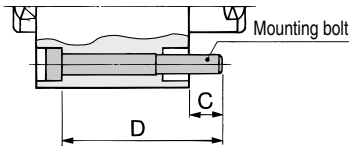

Cylinder model	C	D	Mounting bolt part no.
CQ2WB12-5D	8.3	35	CQ-M3 x 35L
-10D		40	x 40L
-15D		45	x 45L
-20D		50	x 50L
-25D		55	x 55L
-30D		60	x 60L
CQ2WB16-5D	7.5	35	CQ-M3 x 35L
-10D		40	x 40L
-15D		45	x 45L
-20D		50	x 50L
-25D		55	x 55L
-30D		60	x 60L
CQ2WB20-5D	6	30	CQ-M5 x 30L
-10D		35	x 35L
-15D		40	x 40L
-20D		45	x 45L
-25D		50	x 50L
-30D		55	x 55L
-35D		60	x 60L
-40D		65	x 65L
-45D		70	x 70L
-50D		75	x 75L
CQ2WB25-5D	8	35	CQ-M5 x 35L
-10D		40	x 40L
-15D		45	x 45L
-20D		50	x 50L
-25D		55	x 55L
-30D		60	x 60L
-35D		65	x 65L
-40D		70	x 70L
-45D		75	x 75L
-50D		80	x 80L

Cylinder model	C	D	Mounting bolt part no.
CQ2WB32-5DZ	6.5	35	CQ-M5 x 35L
-10DZ		40	x 40L
-15DZ		45	x 45L
-20DZ		50	x 50L
-25DZ		55	x 55L
-30DZ		60	x 60L
-35DZ		65	x 65L
-40DZ		70	x 70L
-45DZ		75	x 75L
-50DZ		80	x 80L
-75DZ		115	x 115L
-100DZ		140	x 140L
CQ2WB40-5DZ	7	45	CQ-M5 x 45L
-10DZ		50	x 50L
-15DZ		55	x 55L
-20DZ		60	x 60L
-25DZ		65	x 65L
-30DZ		70	x 70L
-35DZ		75	x 75L
-40DZ		80	x 80L
-45DZ		85	x 85L
-50DZ		90	x 90L
-75DZ		125	x 125L
-100DZ		150	x 150L
CQ2WB50-10DZ	12.5	55	CQ-M6 x 55L
-15DZ		60	x 60L
-20DZ		65	x 65L
-25DZ		70	x 70L
-30DZ		75	x 75L
-35DZ		80	x 80L
-40DZ		85	x 85L
-45DZ		90	x 90L
-50DZ		95	x 95L
-75DZ		130	x 130L
-100DZ		155	x 155L

Cylinder model	C	D	Mounting bolt part no.
CQ2WB63-10DZ	13.5	55	CQ-M8 x 55L
-15DZ		60	x 60L
-20DZ		65	x 65L
-25DZ		70	x 70L
-30DZ		75	x 75L
-35DZ		80	x 80L
-40DZ		85	x 85L
-45DZ		90	x 90L
-50DZ		95	x 95L
-75DZ		130	x 130L
-100DZ		155	x 155L
CQ2WB80-10DZ	12.5	60	CQ-M10 x 60L
-15DZ		65	x 65L
-20DZ		70	x 70L
-25DZ		75	x 75L
-30DZ		80	x 80L
-35DZ		85	x 85L
-40DZ		90	x 90L
-45DZ		95	x 95L
-50DZ		100	x 100L
-75DZ		135	x 135L
-100DZ		160	x 160L
CQ2WB100-10DZ	13	70	CQ-M10 x 70L
-15DZ		75	x 75L
-20DZ		80	x 80L
-25DZ		85	x 85L
-30DZ		90	x 90L
-35DZ		95	x 95L
-40DZ		100	x 100L
-45DZ		105	x 105L
-50DZ		110	x 110L
-75DZ		145	x 145L
-100DZ		170	x 170L

Through-hole Type Mounting Bolt for the CDQ2W: With Auto Switch Magnet

Cylinder model	C	D	Mounting bolt part no.
CDQ2WB12-5DZ	6.1	40	CQ-M3 x 40L
-10DZ		45	x 45L
-15DZ		50	x 50L
-20DZ		55	x 55L
-25DZ		60	x 60L
-30DZ		65	x 65L
CDQ2WB16-5DZ	7.5	45	CQ-M3 x 45L
-10DZ		50	x 50L
-15DZ		55	x 55L
-20DZ		60	x 60L
-25DZ		65	x 65L
-30DZ		70	x 70L
CDQ2WB20-5DZ	9	45	CQ-M5 x 45L
-10DZ		50	x 50L
-15DZ		55	x 55L
-20DZ		60	x 60L
-25DZ		65	x 65L
-30DZ		70	x 70L
-35DZ		75	x 75L
-40DZ		80	x 80L
-45DZ		85	x 85L
-50DZ		90	x 90L
CDQ2WB25-5DZ	8	45	CQ-M5 x 45L
-10DZ		50	x 50L
-15DZ		55	x 55L
-20DZ		60	x 60L
-25DZ		65	x 65L
-30DZ		70	x 70L
-35DZ		75	x 75L
-40DZ		80	x 80L
-45DZ		85	x 85L
-50DZ		90	x 90L

Cylinder model	C	D	Mounting bolt part no.
CDQ2WB32-5DZ	6.5	45	CQ-M5 x 45L
-10DZ		50	x 50L
-15DZ		55	x 55L
-20DZ		60	x 60L
-25DZ		65	x 65L
-30DZ		70	x 70L
-35DZ		75	x 75L
-40DZ		80	x 80L
-45DZ		85	x 85L
-50DZ		90	x 90L
-75DZ		115	x 115L
-100DZ		140	x 140L
CDQ2WB40-5DZ	7	55	CQ-M5 x 55L
-10DZ		60	x 60L
-15DZ		65	x 65L
-20DZ		70	x 70L
-25DZ		75	x 75L
-30DZ		80	x 80L
-35DZ		85	x 85L
-40DZ		90	x 90L
-45DZ		95	x 95L
-50DZ		100	x 100L
-75DZ		125	x 125L
-100DZ		150	x 150L
CDQ2WB50-10DZ	12.5	65	CQ-M6 x 65L
-15DZ		70	x 70L
-20DZ		75	x 75L
-25DZ		80	x 80L
-30DZ		85	x 85L
-35DZ		90	x 90L
-40DZ		95	x 95L
-45DZ		100	x 100L
-50DZ		105	x 105L
-75DZ		130	x 130L
-100DZ		155	x 155L

Cylinder model	C	D	Mounting bolt part no.
CDQ2WB63-10DZ	13.5	65	CQ-M8 x 65L
-15DZ		70	x 70L
-20DZ		75	x 75L
-25DZ		80	x 80L
-30DZ		85	x 85L
-35DZ		90	x 90L
-40DZ		95	x 95L
-45DZ		100	x 100L
-50DZ		105	x 105L
-75DZ		130	x 130L
-100DZ		155	x 155L
CDQ2WB80-10DZ	12.5	70	CQ-M10 x 70L
-15DZ		75	x 75L
-20DZ		80	x 80L
-25DZ		85	x 85L
-30DZ		90	x 90L
-35DZ		95	x 95L
-40DZ		100	x 100L
-45DZ		105	x 105L
-50DZ		110	x 110L
-75DZ		135	x 135L
-100DZ		160	x 160L
CDQ2WB100-10DZ	13	80	CQ-M10 x 80L
-15DZ		85	x 85L
-20DZ		90	x 90L
-25DZ		95	x 95L
-30DZ		100	x 100L
-35DZ		105	x 105L
-40DZ		110	x 110L
-45DZ		115	x 115L
-50DZ		120	x 120L
-75DZ		145	x 145L
-100DZ		170	x 170L

Construction

Without auto switch magnet

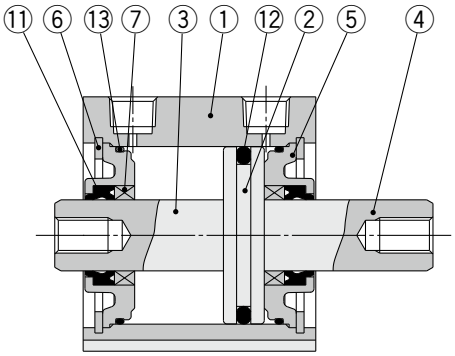

With rubber bumper

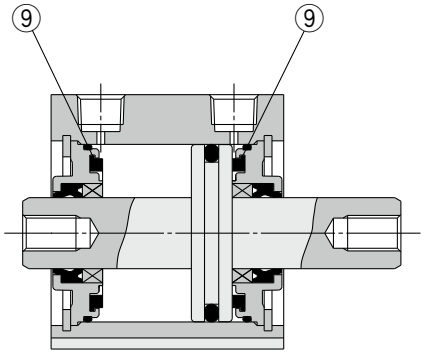

With auto switch magnet

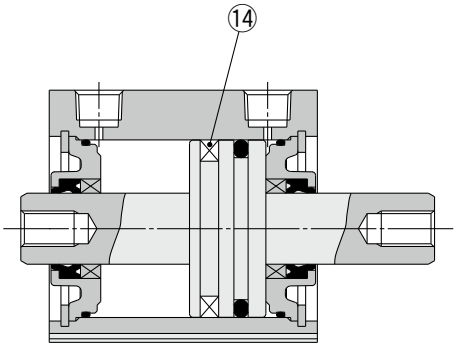

Built-in One-touch fittings

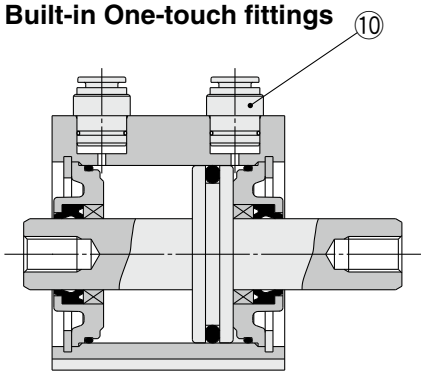

Rod end male thread

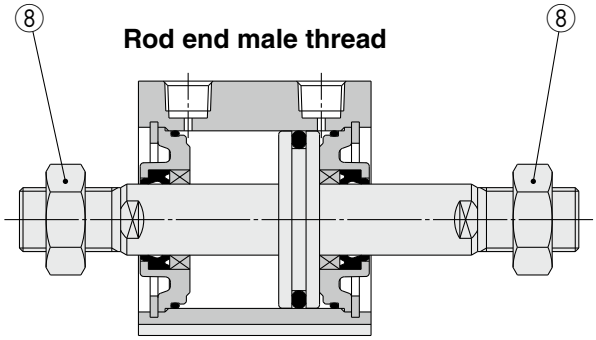

Component Parts

No.	Description	Material	Note
1	**Cylinder tube**	Aluminum alloy	Hard anodized
2	**Piston**	Aluminum alloy	
3	**Piston rod A**	Stainless steel	ø12 to ø25
		Carbon steel	ø32 to ø100, Hard chrome plating
4	**Piston rod B**	Stainless steel	ø12 to ø25
		Carbon steel	ø32 to ø100, Hard chrome plating
5	**Collar**	Aluminum alloy	ø12 to ø40, Anodized
		Aluminum alloy casted	ø50 to ø100, Chromated, Painted
6	**Retaining ring**	Carbon tool steel	Phosphate coated
7	**Bushing**	Bearing alloy	For ø50 or more only
8	**Rod end nut**	Carbon steel	Zinc chromated
9	**Bumper**	Urethane	Pneumatic type only
10	**One-touch fitting**	—	ø32 to ø63
11	**Rod seal**	NBR	
12	**Piston seal**	NBR	
13	**Tube gasket**	NBR	
14	**Magnet**	—	

Replacement Parts/Seal Kit

Pneumatic Type

Bore size [mm]	Kit no.	Contents
12	CQ2WB12-PS	Set of nos. ⑪, ⑫, ⑬
16	CQ2WB16-PS	
20	CQ2WB20-PS	
25	CQ2WB25-PS	
32	CQ2WB32-PS	
40	CQ2WB40-PS	
50	CQ2WB50-PS	
63	CQ2WB63-PS	
80	CQ2WB80-PS	
100	CQ2WB100-PS	

∗ Seal kit includes ⑪, ⑫, ⑬. Order the seal kit based on each bore size.
∗ The seal kit does not include a grease pack. Order it separately.
Grease pack part no.: GR-S-010 (10 g)

Air-hydro Type

Bore size [mm]	Kit no.	Contents
20	CQ2WBH20-PS	Set of nos. ⑪, ⑫, ⑬
25	CQ2WBH25-PS	
32	CQ2WBH32-PS	
40	CQ2WBH40-PS	
50	CQ2WBH50-PS	
63	CQ2WBH63-PS	
80	CQ2WBH80-PS	
100	CQ2WBH100-PS	

∗ Seal kit includes ⑪, ⑫, ⑬. Order the seal kit based on each bore size.
∗ The seal kit does not include a grease pack. Order it separately.
Grease pack part no.: GR-S-010 (10 g)

Bore Size

ø12 to ø25 Without Auto Switch Magnet

Through-hole: CQ2WB

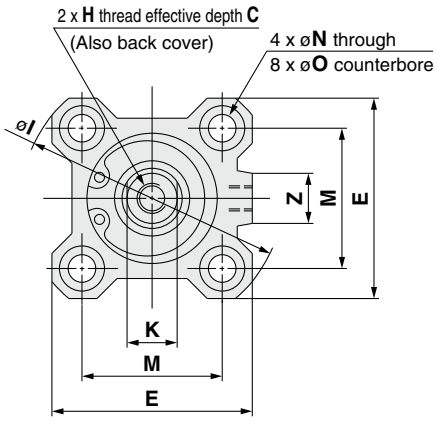

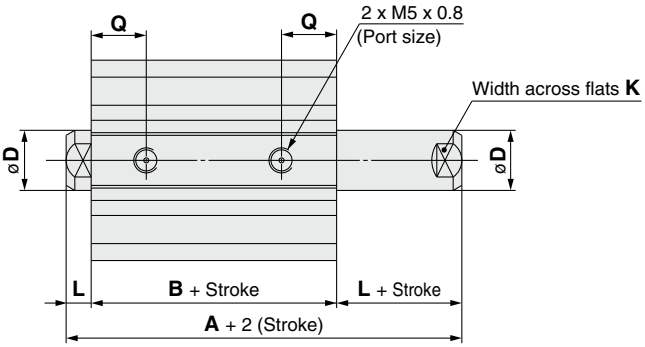

[mm]

Bore size [mm]	Stroke range [mm]	A	B	C	D	E	H	I	K	L	M	N	O	Q	Z
12	5 to 30	32.2	25.2	6	6	25	M3 x 0.5	32	5	3.5	15.5	3.5	6.5 depth 3.5	10	—
16	5 to 30	33	26	8	8	29	M4 x 0.7	38	6	3.5	20	3.5	6.5 depth 3.5	10	10
20	5 to 50	35	26	7	10	36	M5 x 0.8	47	8	4.5	25.5	5.5	9 depth 7	8	10
25	5 to 50	39	29	12	12	40	M6 x 1.0	52	10	5	28	5.5	9 depth 7	9	10

∗ For details on the rod end nut and accessory brackets ⇨ p. 34 to 36
∗ The positions of left and right width across flats are not constant.
∗ The external dimensions with rubber bumper are same as those of the standard, as shown above.

Both ends tapped

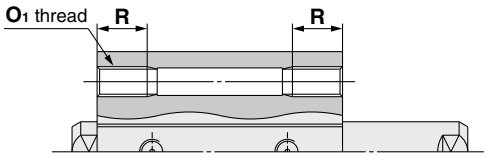

[mm]

Bore size [mm]	O_1	R
12	M4 x 0.7	7
16	M4 x 0.7	7
20	M6 x 1.0	10
25	M6 x 1.0	10

Rod end male thread

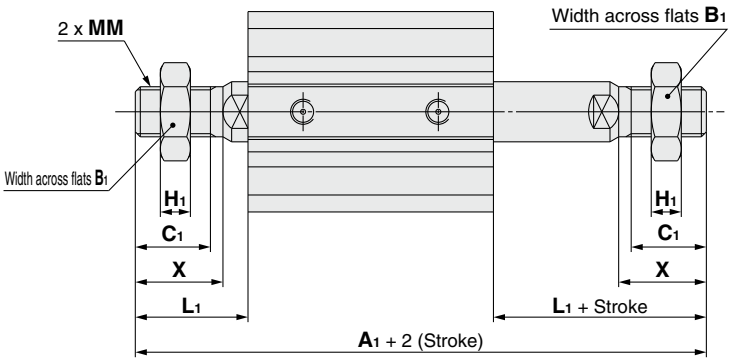

[mm]

Bore size [mm]	A_1	B_1	C_1	H_1	L_1	MM	X
12	53.2	8	9	4	14	M5 x 0.8	10.5
16	57	10	10	5	15.5	M6 x 1.0	12
20	63	13	12	5	18.5	M8 x 1.25	14
25	74	17	15	6	22.5	M10 x 1.25	17.5

Bore Size

ø12 to ø25 With Auto Switch Magnet

Through-hole: CDQ2WB

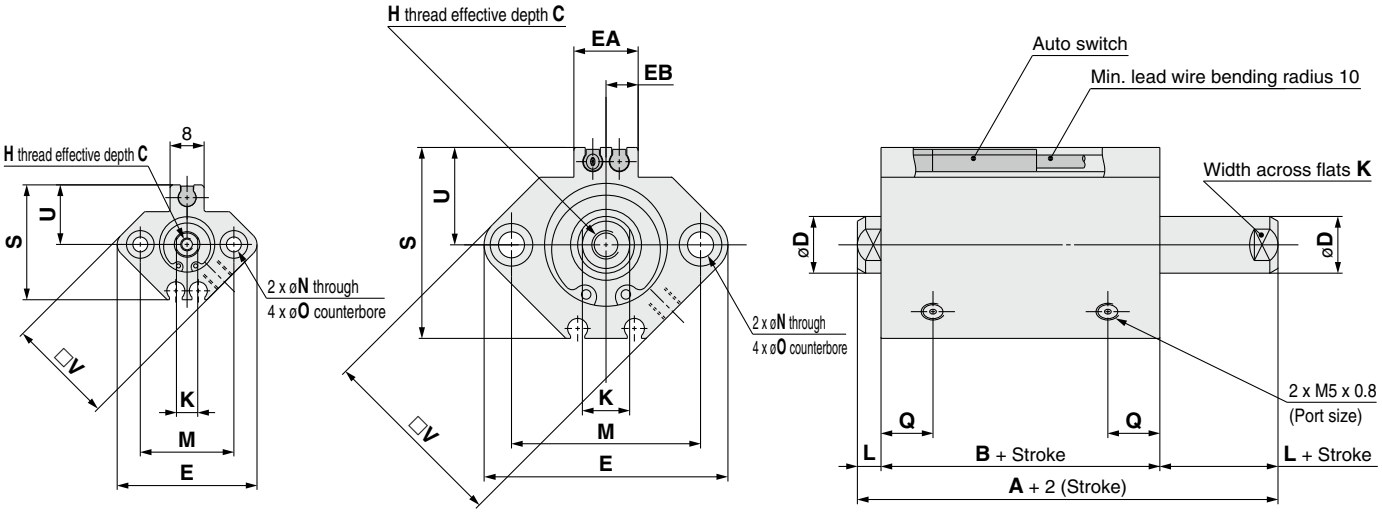

[mm]

Bore Size [mm]	Stroke range [mm]	A	B	C	D	E	EA	EB	H	K	L	M	N	O	Q	S	U	V
12	5 to 30	39.4	32.4	6	6	33	—	—	M3 x 0.5	5	3.5	22	3.5	6.5 depth 3.5	10.5	27.5	14	25
16	5 to 30	43	36	8	8	37	13.2	6.6	M4 x 0.7	6	3.5	28	3.5	6.5 depth 3.5	10	29.5	15	29
20	5 to 50	47	38	7	10	47	13.6	6.8	M5 x 0.8	8	4.5	36	5.5	9 depth 7	8	35.5	18	36
25	5 to 50	49	39	12	12	52	13.6	6.8	M6 x 1.0	10	5	40	5.5	9 depth 7	9	40.5	21	40

∗ For details on the rod end nut and accessory brackets ⇨ p. 34 to 36
∗ The positions of left and right width across flats are not constant.
∗ The external dimensions with rubber bumper are same as those of the standard, as shown above.
∗ For the auto switch proper mounting position and mounting height ⇨ p. 149 to 156

Both ends tapped

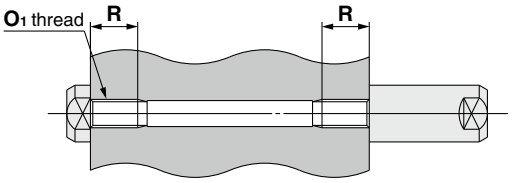

[mm]

Bore Size [mm]	O_1	R
12	M4 x 0.7	7
16	M4 x 0.7	7
20	M6 x 1.0	10
25	M6 x 1.0	10

Rod end male thread

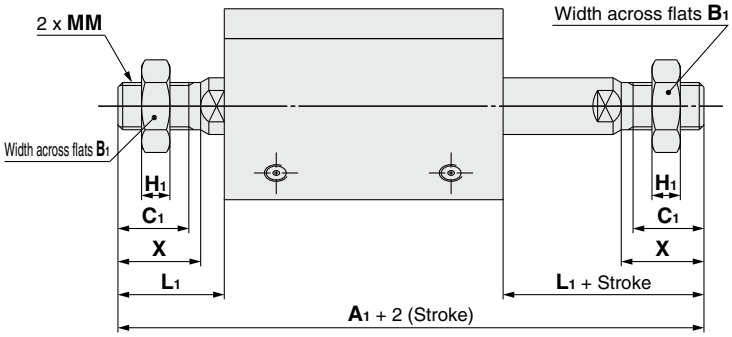

[mm]

Bore Size [mm]	A_1	B_1	C_1	H_1	L_1	MM	X
12	60.4	8	9	4	14	M5 x 0.8	10.5
16	67	10	10	5	15.5	M6 x 1.0	12
20	75	13	12	5	18.5	M8 x 1.25	14
25	84	17	15	6	22.5	M10 x 1.25	17.5

Bore Size

ø32 to ø50 With/Without Auto Switch Magnet

Through-hole: C□Q2WB

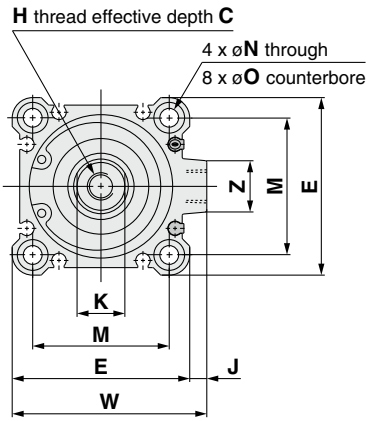

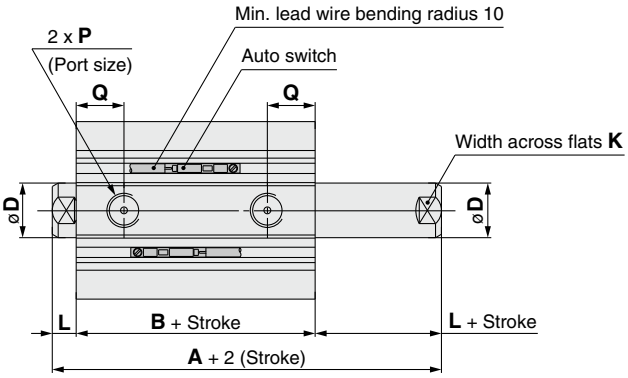

[mm]

Bore size [mm]	Stroke range [mm]	Without auto switch magnet			With auto switch magnet		
		A	B	P	A	B	P
32	5	44.5	30.5	M5	54.5	40.5	1/8
	10 to 50			1/8			
	75,100	54.5	40.5				
40	5 to 50	54	40	1/8	64	50	1/8
	75,100	64	50				
50	10 to 50	56.5	40.5	1/4	66.5	50.5	1/4
	75,100	66.5	50.5				

* For details on the rod end nut and accessory brackets ⇨ p. 34 to 36
* The positions of left and right width across flats are not constant.
* The external dimensions with rubber bumper are same as those of the standard, as shown above.
* For the auto switch proper mounting position and mounting height ⇨ p. 149 to 156

Bore size [mm]	C	D	E	H	J	K	L	M	N	O	Q	W	Z
32	13	16	45	M8 x 1.25	4.5	14	7	34	5.5	9 depth 7	10	49.5	14
40	13	16	52	M8 x 1.25	5	14	7	40	5.5	9 depth 7	12.5	57	15
50	15	20	64	M10 x 1.5	7	17	8	50	6.6	11 depth 8	14	71	19

Both ends tapped

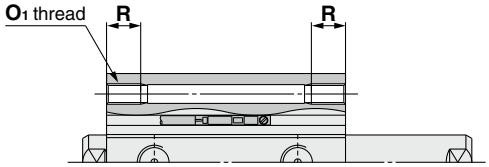

[mm]

Bore size [mm]	O_1	R
32	M6 x 1.0	10
40	M6 x 1.0	10
50	M8 x 1.25	14

Built-in One-touch fittings

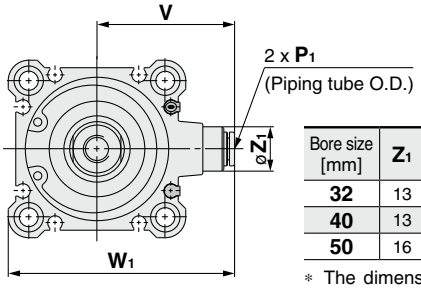

[mm]

Bore size [mm]	Z_1	P_1	V	W_1
32	13	6	36.5	59
40	13	6	40.5	66
50	16	8	50	82

* The dimensions of the ø32-5 mm stroke with built-in One-touch fittings (without magnet) are the same as those of the 10 mm stroke cylinder tube.

Rod end male thread

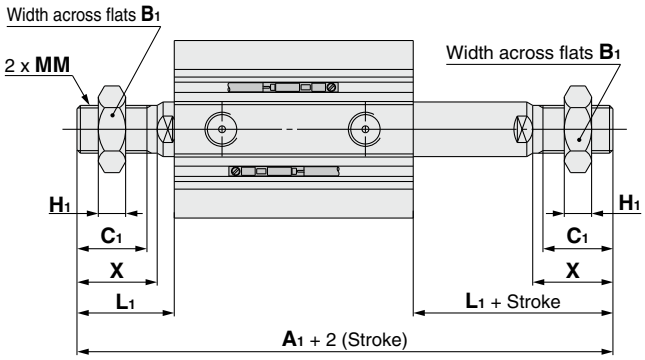

[mm]

Bore size [mm]	Stroke range [mm]	Without auto switch magnet	With auto switch magnet
		A_1	A_1
32	5 to 50	87.5	97.5
	75,100	97.5	
40	5 to 50	97	107
	75,100	107	
50	10 to 50	107.5	117.5
	75,100	117.5	

Bore size [mm]	B_1	C_1	H_1	L_1	MM	X
32	22	20.5	8	28.5	M14 x 1.5	23.5
40	22	20.5	8	28.5	M14 x 1.5	23.5
50	27	26	11	33.5	M18 x 1.5	28.5

Bore Size

ø63 to ø100 With/Without Auto Switch Magnet

Through-hole: CⒹQ2WB

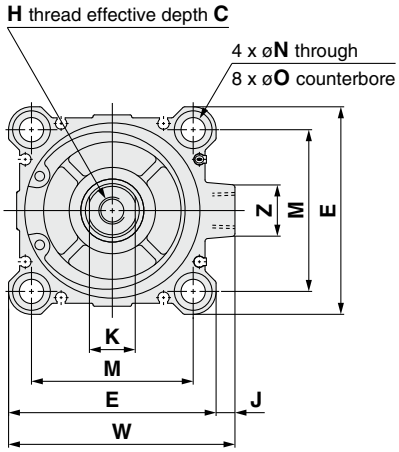

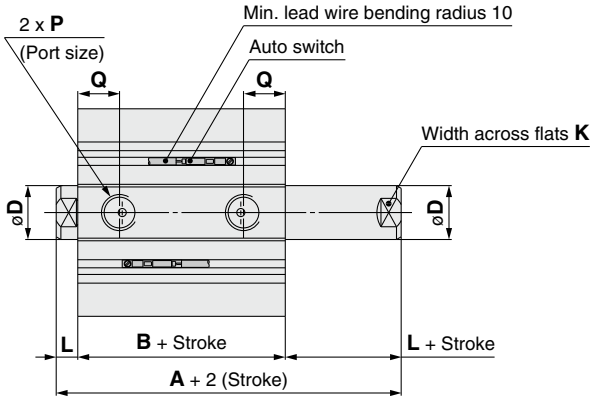

[mm]

Bore size [mm]	Stroke range [mm]	Without auto switch magnet		With auto switch magnet	
		A	B	A	B
63	10 to 50	58	42	68	52
	75,100	68	52		
80	10 to 50	71	51	81	61
	75,100	81	61		
100	10 to 50	84.5	60.5	94.5	70.5
	75,100	94.5	70.5		

[mm]

Bore size [mm]	C	D	E	H	J	K	L	M	N	O	P	Q	W	Z
63	15	20	77	M10 x 1.5	7	17	8	60	9	14 depth 10.5	1/4	15.5	84	19
80	21	25	98	M16 x 2.0	6	22	10	77	11	17.5 depth 13.5	3/8	18	104	25
100	27	30	117	M20 x 2.5	6.5	27	12	94	11	17.5 depth 13.5	3/8	22	123.5	25

- For details on the rod end nut and accessory brackets ⇨ p. 34 to 36
- The positions of left and right width across flats are not constant.
- The external dimensions with rubber bumper are same as those of the standard, as shown above.
- For the auto switch proper mounting position and mounting height ⇨ p. 149 to 156

Both ends tapped

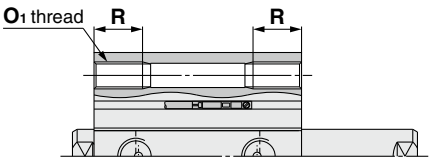

[mm]

Bore size [mm]	O_1	R
63	M10 x 1.5	18
80	M12 x 1.75	22
100	M12 x 1.75	22

Built-in One-touch fittings: ø63

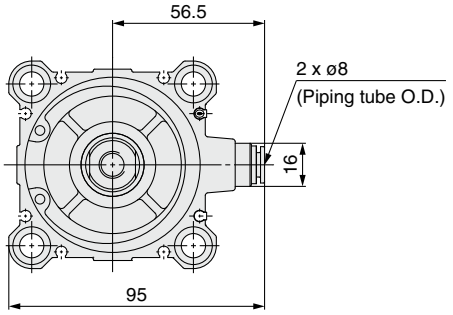

Rod end male thread

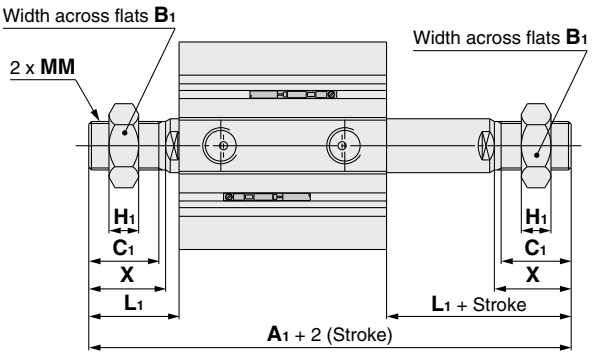

[mm]

Bore size [mm]	Stroke range [mm]	Without auto switch magnet	With auto switch magnet
		A_1	A_1
63	10 to 50	109	119
	75,100	119	
80	10 to 50	138	148
	75,100	148	
100	10 to 50	147.5	157.5
	75,100	157.5	

[mm]

Bore size [mm]	B_1	C_1	H_1	L_1	MM	X
63	27	26	11	33.5	M18 x 1.5	28.5
80	32	32.5	13	43.5	M22 x 1.5	35.5
100	41	32.5	16	43.5	M26 x 1.5	35.5

Accessory Brackets

Mounting Brackets

Foot

ø12 to ø25

With auto switch magnet
CQ-LZ□□

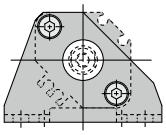

Without auto switch magnet
CQ-L0□□

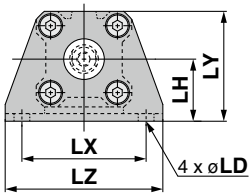

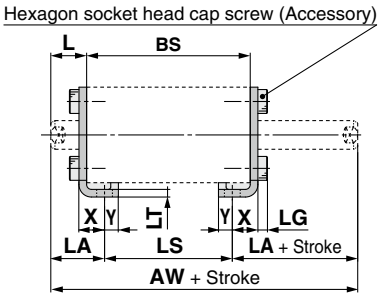

Rod end male thread

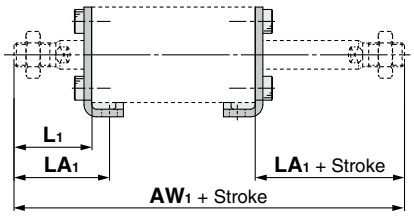

ø32 to ø100

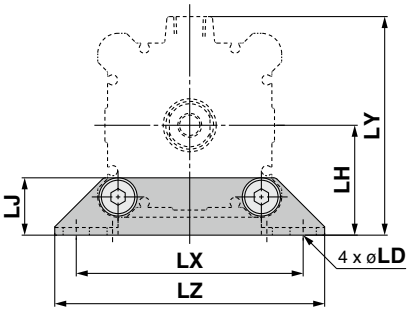

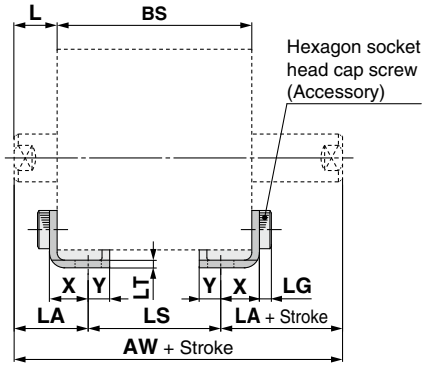

Rod end male thread

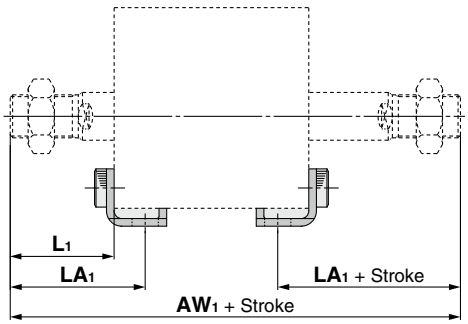

∗ The foot bracket cannot be retrofitted for through-hole mounting (B).

∗ BS indicates the overall length of the cylinder tube to be used.

Material: Carbon steel, Surface treatment: Nickel plating

[mm]

Bore size [mm]	Part no.	AW	AW1	L	L1	LA	LA1	LD	LG	LH	LJ	LS	LT	LX	LY	LZ	X	Y
12	CQ-L012 CQ-LZ12	BS + 27	BS + 48	13.5	24	19.5	30	4.5	2.8	17	—	BS-12	2	34	29.5	44	8	4.5
16	CQ-L016 CQ-LZ16	BS + 27	BS + 51	13.5	25.5	19.5	31.5	4.5	2.8	19	—	BS-12	2	38	33.5	48	8	5
20	CQ-L020 CQ-LZ20	BS + 29	BS + 57	14.5	28.5	20.5	34.5	6.6	4	24	—	BS-12	3.2	48	42	62	9.2	5.8
25	CQ-L025 CQ-LZ25	BS + 30	BS + 65	15	32.5	22.5	40	6.6	4	26	—	BS-15	3.2	52	46	66	10.7	5.8
32	CQ-L032	BS + 34	BS + 77	17	38.5	25	46.5	6.6	4	30	18.5	BS-16	3.2	57	57	71	11.2	5.8
40	CQ-L040	BS + 34	BS + 77	17	38.5	25	46.5	6.6	4	33	18.5	BS-16	3.2	64	64	78	11.2	7
50	CQ-L050	BS + 36	BS + 87	18	43.5	29.5	55	9	5	39	21	BS-23	3.2	79	78	95	14.7	8
63	CQ-L063	BS + 36	BS + 87	18	43.5	31	56.5	11	5	46	24	BS-26	3.2	95	91.5	113	16.2	9
80	CQ-L080	BS + 40	BS + 107	20	53.5	35	68.5	13	7	59	31	BS-30	4.5	118	114	140	19.5	11
100	CQ-L100	BS + 44	BS + 107	22	53.5	39	70.5	13	7	71	36	BS-34	6	137	136	162	23	12.5

∗ For details on the rod end nut and accessory brackets ⇨ p. 34 to 36

Mounting Brackets

Compact foot

ø12 to ø25

With auto switch magnet
CQ-LCZ□□

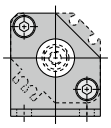

Without auto switch magnet
CQ-LC0□□

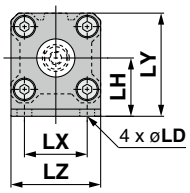

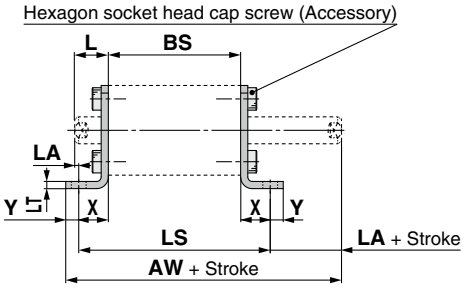

Rod end male thread

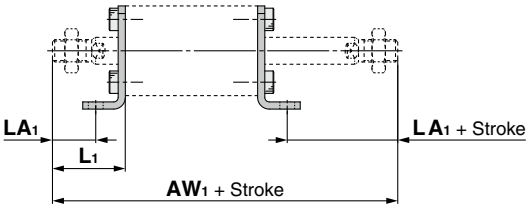

ø32 to ø100

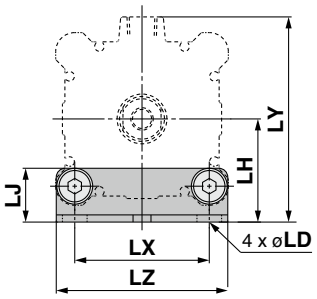

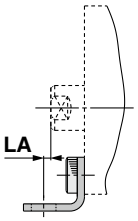

ø63 to ø100

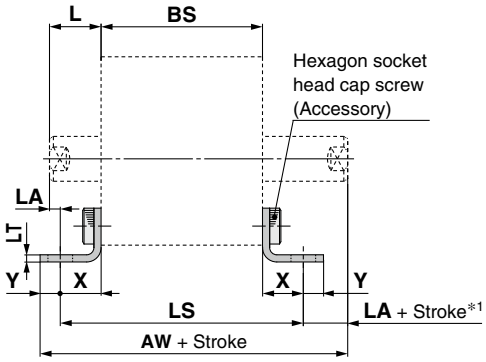

*1 For ø63 to ø100: Stroke - LA

Rod end male thread

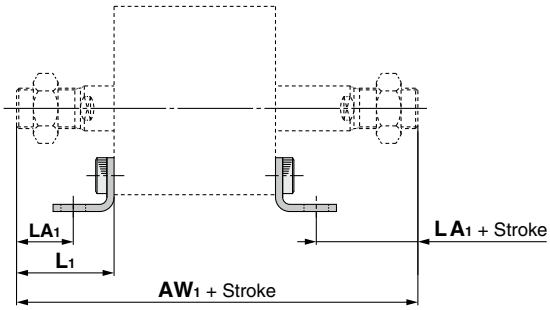

* The compact foot bracket cannot be retrofitted for through-hole mounting (B).

* BS indicates the overall length of the cylinder tube to be used.

Material: Carbon steel, Surface treatment: Zinc chromated

[mm]

Bore size [mm]	Part no.	AW	AW_1	L	L_1	LA	LA_1	LD	LH	LJ	LS	LT	LX	LY	LZ	X	Y
12	CQ-LC012 CQ-LCZ12	BS + 27.3	BS + 48	13.5	24	4.2	14.7	4.5	17	—	BS + 18.6	2	15.5	29.5	25	9.3	4.5
16	CQ-LC016 CQ-LCZ16	BS + 27.8	BS + 51	13.5	25.5	4.2	16.2	4.5	19	—	BS + 18.6	2	20	33.5	29	9.3	5
20	CQ-LC020 CQ-LCZ20	BS + 33.5	BS + 57	14.5	28.5	1.3	15.3	6.6	24	—	BS + 26.4	3.2	25.5	42	36	13.2	5.8
25	CQ-LC025 CQ-LCZ25	BS + 34	BS + 65	15	32.5	1.8	19.3	6.6	26	—	BS + 26.4	3.2	28	46	40	13.2	5.8
32	CQ-LC032	BS + 36.5	BS + 77	17	38.5	3.3	24.8	6.6	30	18.5	BS + 27.4	3.2	34	57	45	13.7	5.8
40	CQ-LC040	BS + 37.7	BS + 77	17	38.5	3.3	24.8	6.6	33	18.5	BS + 27.4	3.2	40	64	52	13.7	7
50	CQ-LC050	BS + 42.7	BS + 87	18	43.5	1.3	26.8	9	39	21	BS + 33.4	3.2	50	78	64	16.7	8
63	CQ-LC063	BS + 45.2	BS + 87	18	43.5	0.2	25.3	11	46	24	BS + 36.4	3.2	60	91.5	77	18.2	9
80	CQ-LC080	BS + 53.5*1	BS + 107	20	53.5	2.5	31	13	59	31	BS + 45	4.5	77	114	98	22.5	11
100	CQ-LC100	BS + 58.5*1	BS + 107	22	53.5	2	29.5	13	71	36	BS + 48	6	94	136	117	24	12.5

*1 For ø80 and ø100 sizes with a stroke of 10 mm or less, the dimensions of "AW + Stroke" are BS + 67 and BS + 73 respectively.

* For details on the rod end nut and accessory brackets ⇨ p. 34 to 36

Mounting Brackets

Flange

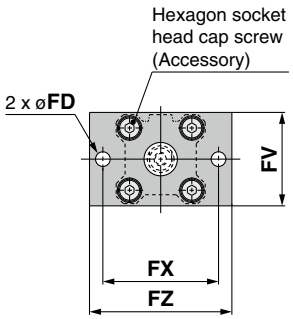

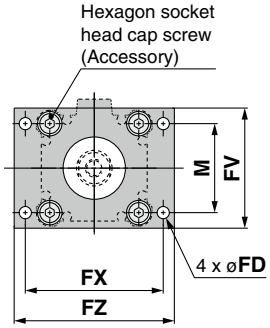

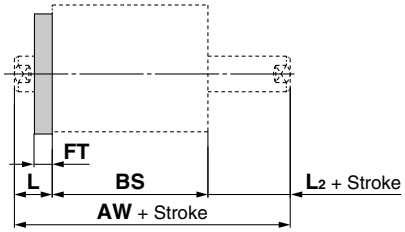

Rod end male thread

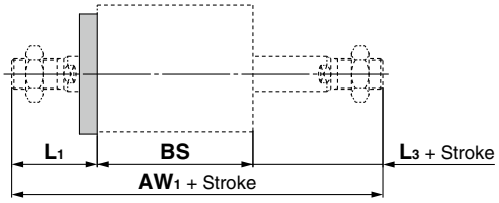

∗ The flange bracket cannot be retrofitted for through-hole mounting (B).

∗ BS indicates the overall length of the cylinder tube to be used.

Material: Carbon steel
Surface treatment: Nickel plating
[mm]

Bore size [mm]	Part no.	AW	AW_1	FD	FT	FV	FX	FZ	L	L_1	L_2	L_3	M
12	CQ-F012	BS + 17	BS + 38	4.5	5.5	25	45	55	13.5	24	3.5	14	—
16	CQ-F016	BS + 17	BS + 41	4.5	5.5	30	45	55	13.5	25.5	3.5	15.5	—
20	CQ-F020	BS + 19	BS + 47	6.6	8	39	48	60	14.5	28.5	4.5	18.5	—
25	CQ-F025	BS + 20	BS + 55	6.6	8	42	52	64	15	32.5	5	22.5	—
32	CQ-F032	BS + 24	BS + 67	5.5	8	48	56	65	17	38.5	7	28.5	34
40	CQ-F040	BS + 24	BS + 67	5.5	8	54	62	72	17	38.5	7	28.5	40
50	CQ-F050	BS + 26	BS + 77	6.6	9	67	76	89	18	43.5	8	33.5	50
63	CQ-F063	BS + 26	BS + 77	9	9	80	92	108	18	43.5	8	33.5	60
80	CQ-F080	BS + 30	BS + 97	11	11	99	116	134	20	53.5	10	43.5	77
100	CQ-F100	BS + 34	BS + 97	11	11	117	136	154	22	53.5	12	43.5	94

∗ For details on the rod end nut and accessory brackets ⇨ p. 34 to 36

Compact Cylinder: Standard Single Acting, Single Rod

CQ2 Series

ø12, ø16, ø20, ø25, ø32, ø40, ø50

How to Order

Without auto switch ø12 to ø25	CQ2 B 20 ☐ – 10 S ☐ — ☐ ☐ – ☐
Without auto switch ø32 to ø50	CQ2 B 32 ☐ – 10 S ☐ Z – ☐ ☐ – ☐
With auto switch	CDQ2 B 32 ☐ – 10 S M Z – L W – M9BW ☐ – ☐

❶ ❷ ❸ ❹ ❺ ❻ ❼ ❽ ❾ ❿ ⓫ ⓬

With auto switch magnet
The overall length of the cylinder with an auto switch magnet is longer than that of the cylinder without an auto switch magnet by the length of the built-in magnet. For details, refer to the dimensions of each size.

❶ Mounting

B	Through-hole
A	Both ends tapped
L	Foot
LC	Compact foot
F	Rod flange
G	Head flange
D	Double clevis

∗ Mounting brackets are shipped together with the product but do not come assembled.
∗ Refer to ❽ for the through-hole type mounting bolt.
∗ For cylinders with mounting options "L," "LC," or "F," the cylinder rod protrusion dimensions (Dimensions L and L_1) vary from the standard cylinder. When only ordering the cylinder, order the rod end length increased by 10 mm (-XC2) cylinder.
For details ⇨ p. 178

❷ Bore size

12	12 mm
16	16 mm
20	20 mm
25	25 mm
32	32 mm
40	40 mm
50	50 mm

❸ Port thread type

Nil	M thread	ø12 to ø25
	Rc	ø32 to ø50
TN	NPT	
TF	G	
F	Built-in One-touch fittings∗1	

∗1 The bore sizes available with One-touch fittings are ø32 to ø50.
∗ For cylinders without an auto switch magnet, M threads are compatible only with ø32-5 mm stroke.

❹ Cylinder stroke

(For details on the minimum stroke for auto switch mounting ⇨ p. 157) [mm]

Bore size	Standard stroke
12, 16, 20, 25, 32, 40	5, 10
50	10, 20

∗ For the manufacturing of intermediate strokes ⇨ p. 53

❺ Action

S	Single acting, Spring return
T	Single acting, Spring extend

❻ Body option

Nil	Rod end female thread
F	With boss on head end
M	Rod end male thread

∗ Combined body options "FM" can be selected.

❼ Auto switch mounting groove

Z	ø12 to ø25	2 surfaces
	ø32 to ø50	4 surfaces

❽ Through-hole type mounting bolt

Nil	None
L	Shipped together

∗ Mounting bolt is shipped together with the product only when the mounting bracket is "B" (Through-hole). For details ⇨ p. 56

∗ **When a made-to-order option is selected, the mounting bolt is not shipped together with the product. Please order it separately.**

❾ Rod end bracket (⇨ p. 34 to 36)

Nil	None
D	Type A mounting bracket + Joint
E	Type B mounting bracket + Joint
V	Single knuckle joint
W	Double knuckle joint

∗ Options "D" and "E" must be used in combination with body option (Nil), the rod end female thread, and options "V" and "W" must be used in combination with body option (M), the rod end male thread.
∗ A knuckle pin is not provided with the single knuckle joint (V). If a pin is required, please order it separately. For details ⇨ p. 34

∗ **When a made-to-order option is selected, the rod end bracket cannot be selected. Please order it separately.**

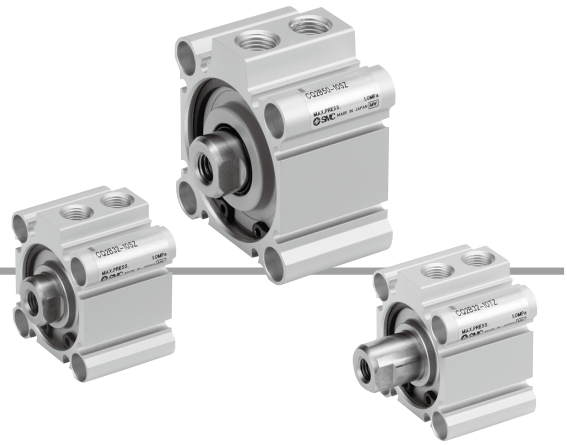

⑩ Auto switch

Nil	Without auto switch

∗ For applicable auto switches, refer to the table below.

⑪ Number of auto switches

Nil	2
S	1
n	n

⑫ Made to order common specifications

For details ⇨ p. 53

Cylinder Model with Auto Switch Magnet

If a cylinder with an auto switch magnet and without an auto switch is required, there is no need to enter the symbol for the auto switch.
(Example) CDQ2L32-10SZ

For details on **auto switch mounting** ⇨ p. 149 to 165

- Auto Switch Proper Mounting Position (Detection at stroke end) and Mounting Height
- Minimum Stroke for Auto Switch Mounting
- Operating Range
- Auto Switch Mounting Brackets/Part Nos.

Applicable Auto Switches / Refer to the **Web Catalog** for further information on auto switches.

Type	Special function	Electrical entry	Indicator light	Wiring (Output)	Load voltage DC		Load voltage AC	Auto switch model Perpendicular	Auto switch model In-line	Lead wire length [m] 0.5 (Nil)	1 (M)	3 (L)	5 (Z)	None (N)	Pre-wired connector	Applicable load	
Solid state auto switch	—	Grommet	Yes	3-wire (NPN)	24 V	5 V, 12 V	—	**M9NV**	**M9N**	●	●	●	○	—	○	IC circuit	Relay, PLC
				3-wire (PNP)				**M9PV**	**M9P**	●	●	●	○	—	○		
				2-wire		12 V		**M9BV**	**M9B**	●	●	●	○	—	○	—	
	Diagnostic indication (2-color indicator)			3-wire (NPN)		5 V, 12 V		**M9NWV**	**M9NW**	●	●	●	○	—	○	IC circuit	
				3-wire (PNP)				**M9PWV**	**M9PW**	●	●	●	○	—	○		
				2-wire		12 V		**M9BWV**	**M9BW**	●	●	●	○	—	○	—	
	Water resistant (2-color indicator)			3-wire (NPN)		5 V, 12 V		**M9NAV**∗1	**M9NA**∗1	○	○	●	○	—	○	IC circuit	
				3-wire (PNP)				**M9PAV**∗1	**M9PA**∗1	○	○	●	○	—	○		
				2-wire		12 V		**M9BAV**∗1	**M9BA**∗1	○	○	●	○	—	○	—	
Reed auto switch	—	Grommet	Yes	3-wire (NPN equivalent)	—	5 V	—	**A96V**	**A96**	●	●	●	●	—	○	IC circuit	—
				2-wire	24 V	12 V	100 V	**A93V**	**A93**	●	●	●	●	—	○∗2	—	Relay, PLC
			No			5 V,12 V	100 V or less	**A90V**	**A90**	●	●	●	●	—	○∗2	IC circuit	

∗1 Water-resistant type auto switches can be mounted on the models on page 51, but SMC cannot guarantee water resistance.
Please contact SMC regarding water-resistant types with the model numbers on page 51.
∗2 The load voltage used is 24 VDC.

∗ Lead wire length symbols: 0.5 m ····· Nil (Example) M9NW
1 m ····· M (Example) M9NWM
3 m ····· L (Example) M9NWL
5 m ····· Z (Example) M9NWZ

∗ Auto switches marked with a "○" are produced upon receipt of order.

∗ There are applicable auto switches other than those listed above. For details ⇨ p. 165

Symbol

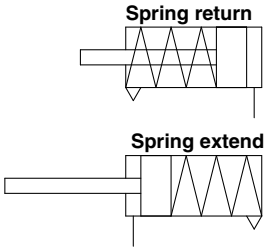

Made to Order Common Specifications
(For details ⇨ p. 167 to 196)

Symbol	Specifications
-XA□	Change of rod end shape, spring return type only
-XB10	Intermediate stroke (Using exclusive body), Spring return type only
-XC2(A)	Rod end length increased by 10 mm (For foot and flange bracket)
-XC6	Piston rod/Retaining ring/Rod end nut material: Stainless steel
-XC26	With split pins for double clevis pin/ double knuckle joint pin and flat washers
-XC27	Double clevis pin/Double knuckle joint pin material: Stainless steel 304
-XC36	With boss on rod end
-XC85	Grease for food processing equipment
-X144	Special port location, with auto switch
-X271	Fluororubber seals
-X1876	Cylinder tube: With concave boss on head end

∗ Stainless steel accessories are also available. For details ⇨ p. 34

Moisture Control Tube
IDK Series

When operating an actuator with a small bore size and a short stroke at a high frequency, dew condensation (water droplets) may occur inside the piping depending on the conditions.
Simply connecting the moisture control tube to the actuator will prevent dew condensation from occurring. For details, refer to the **Web Catalog**.

⚠ Precautions

Refer to page 197 before handling the products.

Specifications

Bore size [mm]	12	16	20	25	32	40	50
Action	Single acting, Single rod						
Fluid	Air						
Proof pressure	1.5 MPa						
Maximum operating pressure	1.0 MPa						
Minimum operating pressure [MPa]	0.25	0.25	0.18	0.18	0.17	0.15	0.13
Ambient and fluid temperatures	Without auto switch magnet: –10 to 70°C With auto switch magnet: –10 to 60°C (No freezing)						
Lubrication	Not required (Non-lube)						
Piston speed	50 to 500 mm/s						
Cushion	None						
Allowable kinetic energy [J]	0.022	0.038	0.055	0.09	0.15	0.26	0.46
Stroke length tolerance	$^{+1.0\ mm}_{0}$						

Manufacturing of Intermediate Strokes
(Except single acting, spring return type)

Type	A spacer is installed in the standard stroke body.	
Part no.	Refer to "How to Order" for the standard model number. (⇨ p. 51)	
Description	Strokes in 1 mm increments are available by installing a spacer in the standard stroke cylinder.	
Stroke range	Bore size	Stroke range
	12 to 40	1 to 9
	50	1 to 19
Example	Part no.: CQ2B20-3T CQ2B20-5T with 2 mm width spacer inside The B dimension is 24.5 mm.	

Mounting Bracket Part Nos.

Bore size [mm]		Foot*1	Compact foot*1	Flange	Double clevis	Double clevis pivot bracket
12	Without auto switch magnet	CQ-L012	CQ-LC012	CQ-F012	CQ-D012	CQ-C012
	With auto switch magnet	CQ-LZ12	CQ-LCZ12			
16	Without auto switch magnet	CQ-L016	CQ-LC016	CQ-F016	CQ-D016	CQ-C016
	With auto switch magnet	CQ-LZ16	CQ-LCZ16			
20	Without auto switch magnet	CQ-L020	CQ-LC020	CQ-F020	CQ-D020	CQ-C020
	With auto switch magnet	CQ-LZ20	CQ-LCZ20			
25	Without auto switch magnet	CQ-L025	CQ-LC025	CQ-F025	CQ-D025	CQ-C025
	With auto switch magnet	CQ-LZ25	CQ-LCZ25			
32		CQ-L032	CQ-LC032	CQ-F032	CQ-D032	CQ-C032
40		CQ-L040	CQ-LC040	CQ-F040	CQ-D040	CQ-C040
50		CQ-L050	CQ-LC050	CQ-F050	CQ-D050	CQ-C050

∗1 When ordering foot and compact foot brackets, the required quantity will be different depending on the bore size.
ø12 to ø25:
· Without auto switch magnet: Order 2 pieces per cylinder.
· With auto switch magnet: Order 1 piece per cylinder. (Part number for a set of 2 foot brackets)
ø32 to ø50:
· Order 2 pieces per cylinder.
∗ Parts included with each type of bracket are as follows.
Foot, Compact foot, Flange: Body mounting bolts
Double clevis: Clevis pin, Type C retaining rings for axis, Body mounting bolts
∗ For details on accessory brackets (Options) ⇨ p. 29 to 36
∗ Foot, compact foot, flange brackets, etc., cannot be retrofitted for through-hole mounting (B).

Dimensions of Each Mounting Bracket

The dimensions of each mounting bracket are the same as those of the standard type, double acting, single rod (except the configuration of the piston rod). Refer to pages 29 to 33.

Theoretical Output

Single Acting, Spring Return

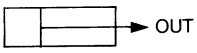

[N]

Bore size [mm]	Operating direction	Operating pressure [MPa]		
		0.3	0.5	0.7
12	OUT	21	44	66
16		45	86	126
20		79	142	205
25		126	224	323
32		211	372	533
40		338	589	841
50		535	928	1316

Single Acting, Spring Extend

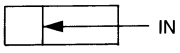

[N]

Bore size [mm]	Operating direction	Operating pressure [MPa]		
		0.3	0.5	0.7
12	IN	14	31	48
16		24	54	85
20		44	91	138
25		84	160	235
32		152	273	393
40		288	499	710
50		412	742	1072

Spring Force

Single Acting, Spring Return

[N]

Bore size [mm]	Stroke [mm]	Spring reaction force [N]	
		Second	First
12	5	13	8.6
	10	13	3.9
16	5	15	10.3
	10	15	5.9
20	5	15	10
	10	15	5.9
25	5	20	16
	10	20	11
32	5	30	23
	10	30	16
40	5	30	13
	10	39	21
50	10	50	30
	20	54	24

Single Acting, Spring Extend

[N]

Bore size [mm]	Stroke [mm]	Spring reaction force [N]	
		Second	First
12	5	11	2.9
	10	9.7	2.8
16	5	20	3.9
	10	20	3.9
20	5	27	5.3
	10	27	5.9
25	5	29	9.8
	10	29	9.8
32	5	29	20
	10	29	20
40	5	29	20
	10	29	20
50	10	83	24
	20	83	24

Single acting, Spring return

•First spring state

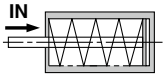

When spring is set in cylinder

•Second spring state

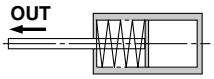

When spring is compressed with air

Single acting, Spring extend

•First spring state

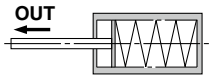

When spring is set in cylinder

•Second spring state

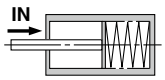

When spring is compressed with air

Weight

Without Auto Switch Magnet

Spring Return

[g]

Bore size [mm]	Cylinder stroke [mm]		
	5	10	20
12	29	35	—
16	42	51	—
20	63	76	—
25	87	101	—
32	125	145	—
40	196	217	—
50	—	357	426

Spring Extend

[g]

Bore size [mm]	Cylinder stroke [mm]		
	5	10	20
12	29	35	—
16	43	50	—
20	67	78	—
25	92	104	—
32	135	151	—
40	206	223	—
50	—	374	429

Additional Weight

[g]

Bore size [mm]		12	16	20	25	32	40	50
Both ends tapped		2	2	6	6	6	6	6
Rod end male thread	Male thread	1.5	3	6	12	26	27	53
	Nut	1	2	4	8	17	17	32
With boss on head end		0.7	1.3	2	3	5	7	13
Built-in One-touch fittings		—	—	—	—	6	6	10.5
Foot (Including mounting bolts)		50	62	150	175	120	138	219
Compact foot (Including mounting bolts)		37	46	115	134	94	109	172
Rod flange (Including mounting bolts)		57	69	139	161	180	214	373
Head flange (Including mounting bolts)		54	65	133	152	165	198	348
Double clevis (Including pin, retaining rings, bolts)		32	39	88	123	151	196	393

Calculation: (Example) **CQ2D32-10SMZ**
- Basic weight: CQ2B32-10SZ ····· 145 g
- Additional weight: Both ends tapped ····· 6 g
  Rod end male thread ····· 43 g
  Double clevis ····· 151 g

  345 g

With Auto Switch Magnet

Spring Return

[g]

Bore size [mm]	Cylinder stroke [mm]		
	5	10	20
12	44	49	—
16	64	72	—
20	97	109	—
25	135	150	—
32	182	202	—
40	269	290	—
50	—	456	521

Spring Extend

[g]

Bore size [mm]	Cylinder stroke [mm]		
	5	10	20
12	49	65	—
16	63	71	—
20	110	119	—
25	149	163	—
32	192	208	—
40	279	296	—
50	—	486	540

Additional Weight

[g]

Bore size [mm]		12	16	20	25	32	40	50
Both ends tapped		1	1	3	3	6	6	6
Rod end male thread	Male thread	1.5	3	6	12	26	27	53
	Nut	1	2	4	8	17	17	32
With boss on head end		0.7	1.3	2	3	5	7	13
Built-in One-touch fittings		—	—	—	—	6	6	10.5
Foot (Including mounting bolts)		41	53	126	149	120	138	219
Compact foot (Including mounting bolts)		30	38	94	113	94	109	172
Rod flange (Including mounting bolts)		54	67	131	153	180	214	373
Head flange (Including mounting bolts)		52	63	124	144	165	198	348
Double clevis (Including pin, retaining rings, bolts)		29	35	78	114	151	196	393

Calculation: (Example) **CDQ2D32-10SMZ**
- Basic weight: CDQ2B32-10SZ ····· 202 g
- Additional weight: Both ends tapped ····· 6 g
  Rod end male thread ····· 43 g
  Double clevis ····· 151 g

  402 g

Add each weight of auto switches when auto switches are mounted.

Through-hole Type Mounting Bolt for the CQ2: Without Auto Switch Magnet

Mounting bolt for the through-hole mounting of the CQ2B is available as an option.
Refer to the following for ordering procedures.
Order the actual number of bolts that will be used.

Example) CQ-M3 x 25L 4 pcs.

Type: Hexagon socket head cap screw
Material: Chromium molybdenum steel
Surface treatment: Zinc chromated

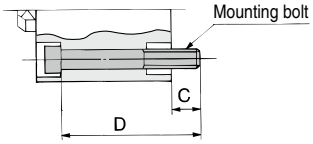

Spring Return

Cylinder model	C	D	Mounting bolt part no.
CQ2B12-5S	6.5	25	CQ-M3 x 25L
-10S		30	x 30L
CQ2B16-5S	5	25	CQ-M3 x 25L
-10S		30	x 30L
CQ2B20-5S	7.5	25	CQ-M5 x 25L
-10S		30	x 30L
CQ2B25-5S	9.5	30	CQ-M5 x 30L
-10S		35	x 35L
CQ2B32-5SZ	9	30	CQ-M5 x 30L
-10SZ		35	x 35L
CQ2B40-5SZ	7.5	35	CQ-M5 x 35L
-10SZ		40	x 40L
CQ2B50-10SZ	12.5	45	CQ-M6 x 45L
-20SZ		55	x 55L

Spring Extend

Cylinder model	C	D	Mounting bolt part no.
CQ2B12-5T	6.5	25	CQ-M3 x 25L
-10T		30	x 30L
CQ2B16-5T	5	25	CQ-M3 x 25L
-10T		30	x 30L
CQ2B20-5T	7.5	25	CQ-M5 x 25L
-10T		30	x 30L
CQ2B25-5T	9.5	30	CQ-M5 x 30L
-10T		35	x 35L
CQ2B32-5TZ	9	30	CQ-M5 x 30L
-10TZ		35	x 35L
CQ2B40-5TZ	7.5	35	CQ-M5 x 35L
-10TZ		40	x 40L
CQ2B50-10TZ	12.5	45	CQ-M6 x 45L
-20TZ		55	x 55L

Through-hole Type Mounting Bolt for the CDQ2: With Auto Switch Magnet

Spring Return

Cylinder model	C	D	Mounting bolt part no.
CDQ2B12-5SZ	5.5	35	CQ-M3 x 35L
-10SZ		40	x 40L
CDQ2B16-5SZ	8	40	CQ-M3 x 40L
-10SZ		45	x 45L
CDQ2B20-5SZ	10.5	40	CQ-M5 x 40L
-10SZ		45	x 45L
CDQ2B25-5SZ	9.5	40	CQ-M5 x 40L
-10SZ		45	x 45L
CDQ2B32-5SZ	9	40	CQ-M5 x 40L
-10SZ		45	x 45L
CDQ2B40-5SZ	7.5	45	CQ-M5 x 45L
-10SZ		50	x 50L
CDQ2B50-10SZ	12.5	55	CQ-M6 x 55L
-20SZ		65	x 65L

Spring Extend

Cylinder model	C	D	Mounting bolt part no.
CDQ2B12-5TZ	6.1	40	CQ-M3 x 40L
-10TZ		45	x 45L
CDQ2B16-5TZ	8	40	CQ-M3 x 40L
-10TZ		45	x 45L
CDQ2B20-5TZ	10.5	40	CQ-M5 x 40L
-10TZ		45	x 45L
CDQ2B25-5TZ	9.5	40	CQ-M5 x 40L
-10TZ		45	x 45L
CDQ2B32-5TZ	9	40	CQ-M5 x 40L
-10TZ		45	x 45L
CDQ2B40-5TZ	7.5	45	CQ-M5 x 45L
-10TZ		50	x 50L
CDQ2B50-10TZ	12.5	55	CQ-M6 x 55L
-20TZ		65	x 65L

Construction

Without auto switch magnet

Spring return

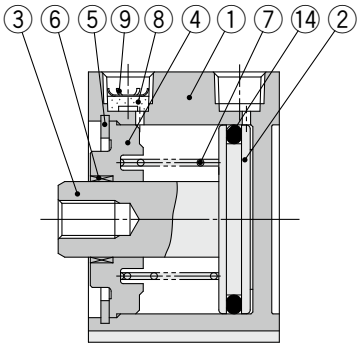

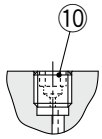

Port size
M5 x 0.8

Spring extend

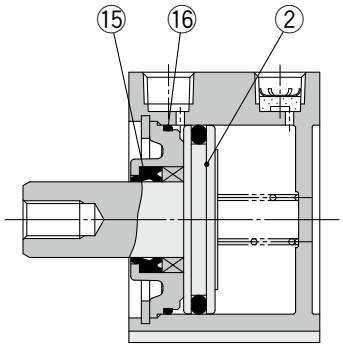

With auto switch magnet

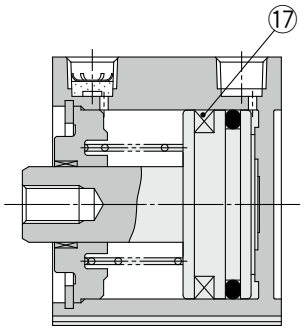

With boss on head end

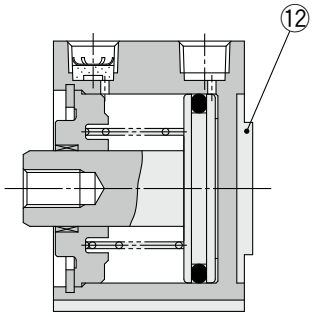

Rod end male thread

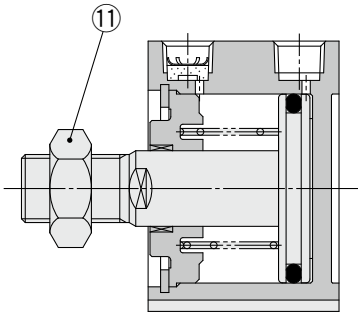

Built-in One-touch fittings

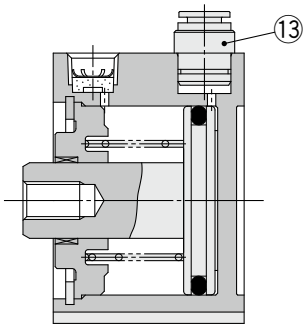

Component Parts

No.	Description	Material	Note
1	**Cylinder tube**	Aluminum alloy	Hard anodized
2*1	**Piston**	Aluminum alloy	
3	**Piston rod**	Stainless steel	ø12 to ø25
		Carbon steel	ø32 to ø50, Hard chrome plating
4	**Collar**	Aluminum alloy	ø12 to ø40, Anodized
		Aluminum alloy casted	ø50, Chromated, Painted
5	**Retaining ring**	Carbon tool steel	Phosphate coated
6	**Bushing**	Bearing alloy	ø50
7	**Return spring**	Piano wire	Zinc chromated
8	**Bronze element**	Sintered metallic BC	Port size Rc1/8, 1/4
9	**Retaining ring**	Carbon tool steel	
10	**Plug with fixed orifice**	Alloy steel	Port size M5 x 0.8
11	**Rod end nut**	Carbon steel	Zinc chromated
12	**Centering location ring**	Aluminum alloy	ø20 to ø50, Anodized
13	**One-touch fitting**	—	ø32 to ø50
14	**Piston seal**	NBR	
15	**Rod seal**	NBR	
16	**Gasket**	NBR	
17	**Magnet**	—	

*1 For the spring extend type (Type T), the piston and piston rod are integrated (stainless steel). (Except ø12 and ø16 of built-in magnet type)

Replacement Parts/Seal Kit

Bore size [mm]	Single acting, Spring return	Single acting, Spring extend
12	CQ2B12-S-PS	CQ2B12-T-PS
16	CQ2B16-S-PS	CQ2B16-T-PS
20	CQ2B20-S-PS	CQ2B20-T-PS
25	CQ2B25-S-PS	CQ2B25-T-PS
32	CQ2B32-S-PS	CQ2B32-T-PS
40	CQ2B40-S-PS	CQ2B40-T-PS
50	CQ2B50-S-PS	CQ2B50-T-PS
Contents	⑭ only	Set of nos. ⑭, ⑮, ⑯

* Order the seal kit based on each bore size.
* The seal kit does not include a grease pack. Order it separately.
Grease pack part no.: GR-S-010 (10 g)

Bore Size

ø12 to ø25 Spring Return/Extend: Without Auto Switch Magnet

Through-hole: CQ2B□S/T

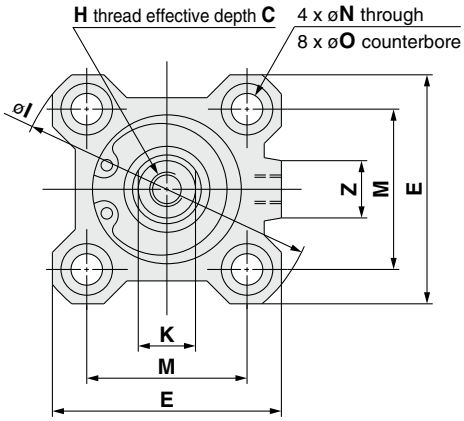

Spring return

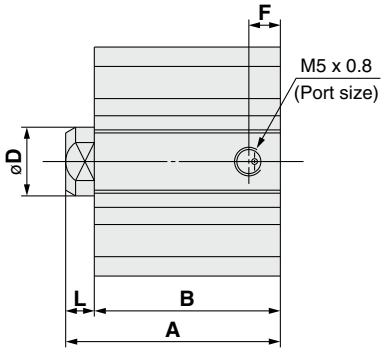

Spring extend

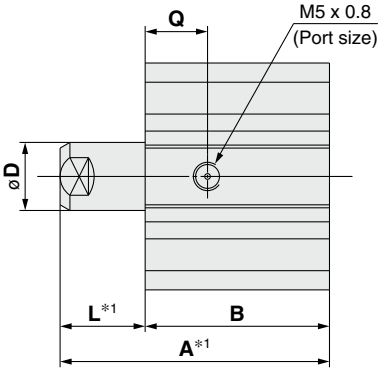

[mm]

Bore size [mm]	Stroke [mm]	A Spring return	A Spring extend	B	C	D	E	F	H	I	K	L Spring return	L Spring extend	M	N	O	Q	Z
12	5	25.5	30.5	22	6	6	25	5	M3 x 0.5	32	5	3.5	8.5	15.5	3.5	6.5 depth 3.5	7.5	—
	10	30.5	40.5	27									13.5					
16	5	27	32	23.5	8	8	29	5.5	M4 x 0.7	38	6	3.5	8.5	20	3.5	6.5 depth 3.5	8	10
	10	32	42	28.5									13.5					
20	5	29	34	24.5	7	10	36	5.5	M5 x 0.8	47	8	4.5	9.5	25.5	5.5	9 depth 7	8	10
	10	34	44	29.5									14.5					
25	5	32.5	37.5	27.5	12	12	40	5.5	M6 x 1.0	52	10	5	10	28	5.5	9 depth 7	9	10
	10	37.5	47.5	32.5									15					

∗1 For the spring extend type, the value refers to the length when the piston rod is extended due to spring force.
∗ For details on the rod end nut and accessory brackets ⇨ p. 34 to 36

Both ends tapped

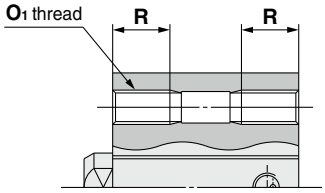

[mm]

Bore size [mm]	O_1	R
12	M4 x 0.7	7
16	M4 x 0.7	7
20	M6 x 1.0	10
25	M6 x 1.0	10

With boss on head end

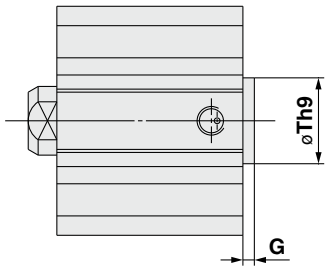

[mm]

Bore size [mm]	G	Th9
12	1.5	$15^{0}_{-0.043}$
16	1.5	$20^{0}_{-0.052}$
20	2	$13^{0}_{-0.043}$
25	2	$15^{0}_{-0.043}$

∗ With boss on rod end: Option (Suffix "-XC36" to the end of model number.)

Rod end male thread

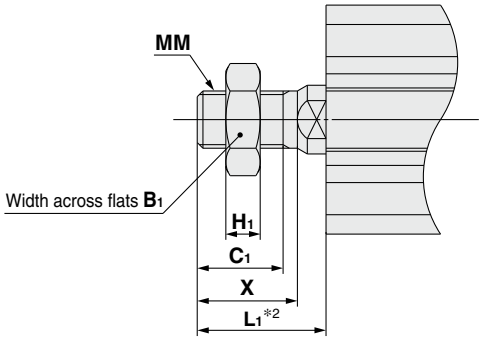

[mm]

Bore size [mm]	B_1	C_1	H_1	L_1 Spring return	L_1 Spring extend 5 st	L_1 Spring extend 10 st	MM	X
12	8	9	4	14	19	24	M5 x 0.8	10.5
16	10	10	5	15.5	20.5	25.5	M6 x 1.0	12
20	13	12	5	18.5	23.5	28.5	M8 x 1.25	14
25	17	15	6	22.5	27.5	32.5	M10 x 1.25	17.5

∗2 For the spring extend type, the value refers to the length when the piston rod is extended due to spring force.

Dimensions of Each Mounting Bracket

The dimensions of each mounting bracket are the same as those of the standard type, double acting, single rod (except the configuration of the piston rod). Refer to pages 29 to 33.

Bore Size

ø12 to ø25 Spring Return/Extend: With Auto Switch Magnet

Through-hole: CDQ2B□S/T

ø12

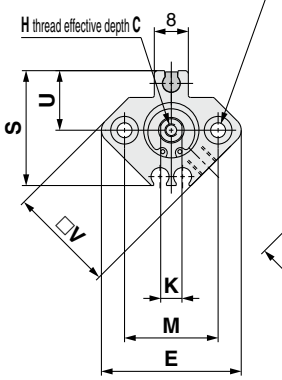

ø16 to ø25

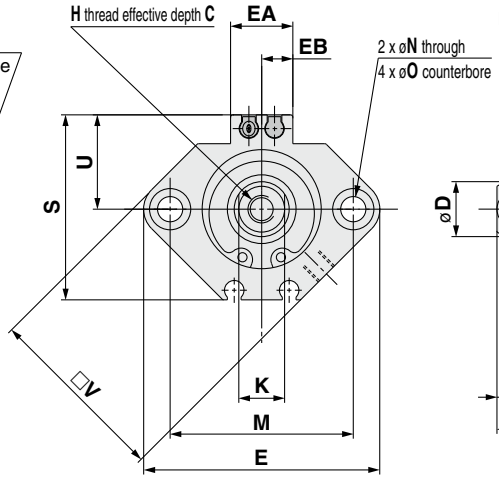

Spring return

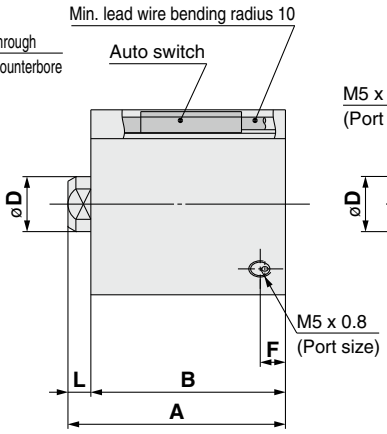

Spring extend

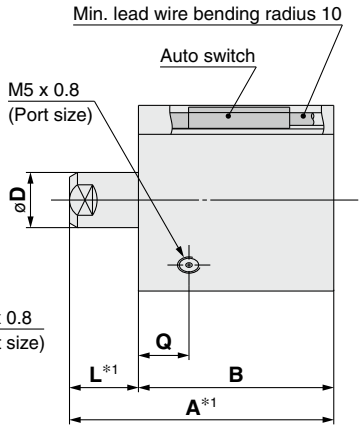

[mm]

Bore size [mm]	Stroke [mm]	A		B		C	D	E	EA	EB	F	H	K	L		M	N	O	Q	S	U	V
		Spring return	Spring extend	Spring return	Spring extend									Spring return	Spring extend							
12	5	36.5	45.9	33	37.4	6	6	33	—	—	6.5	M3 x 0.5	5	3.5	8.5	22	3.5	6.5 depth 3.5	11	27.5	14	25
	10	41.5	55.9	38	42.4										13.5							
16	5	39	44	35.5	35.5	8	8	37	13.2	6.6	5.5	M4 x 0.7	6	3.5	8.5	28	3.5	6.5 depth 3.5	10	29.5	15	29
	10	44	54	40.5	40.5										13.5							
20	5	41	46	36.5	36.5	7	10	47	13.6	6.8	5.5	M5 x 0.8	8	4.5	9.5	36	5.5	9 depth 7	8	35.5	18	36
	10	46	56	41.5	41.5										14.5							
25	5	42.5	47.5	37.5	37.5	12	12	52	13.6	6.8	5.5	M6 x 1.0	10	5	10	40	5.5	9 depth 7	9	40.5	21	40
	10	47.5	57.5	42.5	42.5										15							

∗1 For the spring extend type, the value refers to the length when the piston rod is extended due to spring force.
∗2 For the auto switch proper mounting position and mounting height ⇨ p. 149 to 156
∗ For details on the rod end nut and accessory brackets ⇨ p. 34 to 36

Both ends tapped

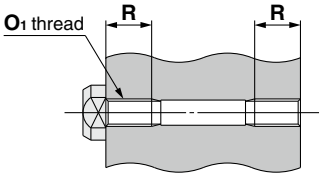

[mm]

Bore size [mm]	O_1	R
12	M4 x 0.7	7
16	M4 x 0.7	7
20	M6 x 1.0	10
25	M6 x 1.0	10

With boss on head end

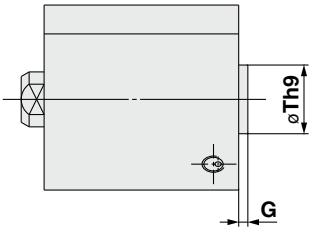

[mm]

Bore size [mm]	G	Th9
12	1.5	$15^{0}_{-0.043}$
16	1.5	$20^{0}_{-0.052}$
20	2	$13^{0}_{-0.043}$
25	2	$15^{0}_{-0.043}$

∗ With boss on rod end: Option (Suffix "-XC36" to the end of model number.)

Rod end male thread

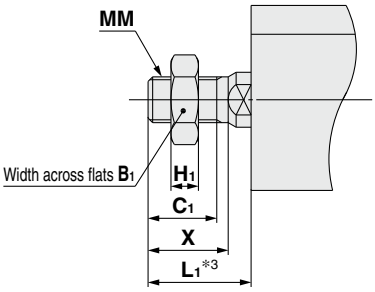

[mm]

Bore size [mm]	B_1	C_1	H_1	L_1			MM	X
				Spring return	Spring extend 5 st	Spring extend 10 st		
12	8	9	4	14	19	24	M5 x 0.8	10.5
16	10	10	5	15.5	20.5	25.5	M6 x 1.0	12
20	13	12	5	18.5	23.5	28.5	M8 x 1.25	14
25	17	15	6	22.5	27.5	32.5	M10 x 1.25	17.5

∗3 For the spring extend type, the value refers to the length when the piston rod is extended due to spring force.

Dimensions of Each Mounting Bracket

The dimensions of each mounting bracket are the same as those of the standard type, double acting, single rod (except the configuration of the piston rod). Refer to pages 29 to 33.

Bore Size

ø32 to ø50 Spring Return/Extend: With/Without Auto Switch Magnet

Through-hole: CⒹQ2B□S/T

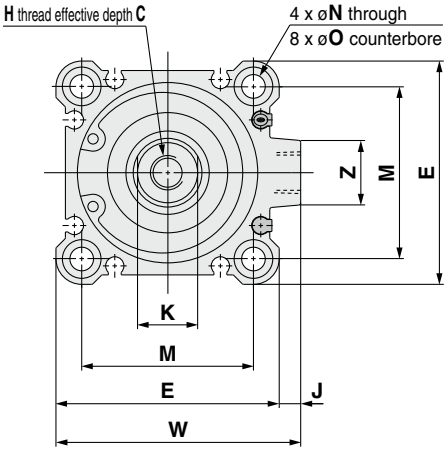

Spring return

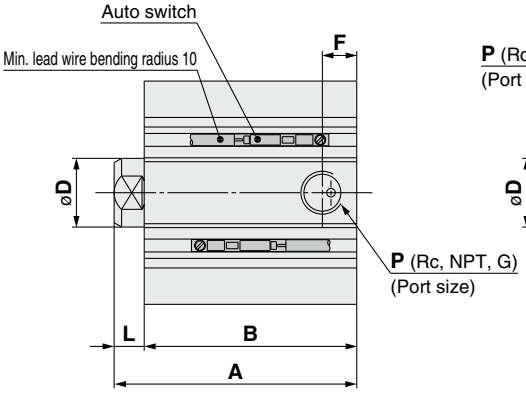

Spring extend

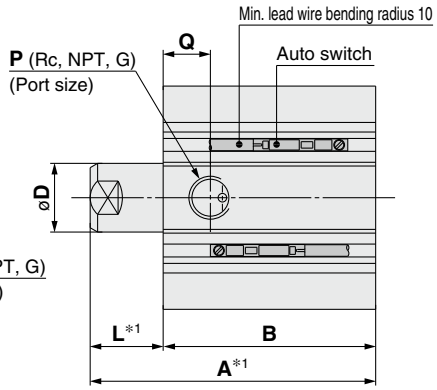

[mm]

Bore size [mm]	Stroke [mm]	Without auto switch magnet A Spring return	Without auto switch magnet A Spring extend	B	F	P	With auto switch magnet A Spring return	With auto switch magnet A Spring extend	B	F	P	C	D	E	H	J	K	L Spring return	L Spring extend	M	N	O	Q	W	Z
32	5	35	40	28	5.5	M5 x 0.8	45	50	38	7.5	1/8	13	16	45	M8 x 1.25	4.5	14	7	12	34	5.5	9 depth 7	10	49.5	14
	10	40	50	33	7.5	1/8	50	60	43										17						
40	5	41.5	46.5	34.5	7.5	1/8	51.5	56.5	44.5	7.5	1/8	13	16	52	M8 x 1.25	5	14	7	12	40	5.5	9 depth 7	12.5	57	15
	10	46.5	56.5	39.5			56.5	66.5	49.5										17						
50	10	48.5	58.5	40.5	10.5	1/4	58.5	68.5	50.5	10.5	1/4	15	20	64	M10 x 1.5	7	17	8	18	50	6.6	11 depth 8	10.5	71	19
	20	58.5	78.5	50.5			68.5	88.5	60.5										28						

∗1 For the spring extend type, the value refers to the length when the piston rod is extended due to spring force.
∗2 The A, B dimensions of the ø32-5 mm stroke with built-in One-touch fittings without auto switch magnet are the same as those of the ø32-10 mm stroke without auto switch magnet.
∗3 For the auto switch proper mounting position and mounting height ⇨ p. 149 to 156
∗ For details on the rod end nut and accessory brackets ⇨ p. 34 to 36

Both ends tapped

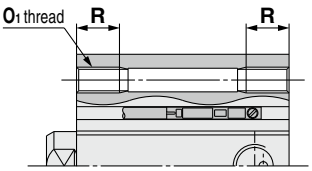

[mm]

Bore size [mm]	O_1	R
32	M6 x 1.0	10
40	M6 x 1.0	10
50	M8 x 1.25	14

With boss on head end

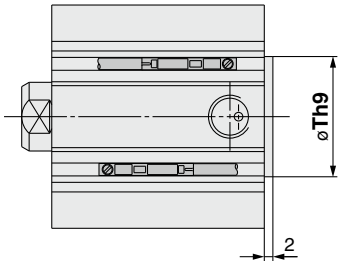

[mm]

Bore size [mm]	Th9
32	$21^{\ 0}_{-0.052}$
40	$28^{\ 0}_{-0.052}$
50	$35^{\ 0}_{-0.062}$

∗ With boss on rod end: Option (Suffix "-XC36" to the end of model number.)

Rod end male thread

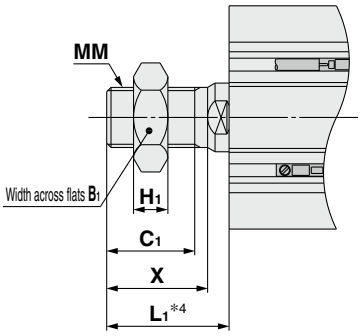

[mm]

Bore size [mm]	B_1	C_1	H_1	L_1 Spring return	L_1 Spring extend 5 st	L_1 Spring extend 10 st	L_1 Spring extend 20 st	MM	X
32	22	20.5	8	28.5	33.5	38.5	—	M14 x 1.5	23.5
40	22	20.5	8	28.5	33.5	38.5	—	M14 x 1.5	23.5
50	27	26	11	33.5	—	43.5	53.5	M18 x 1.5	28.5

∗4 For the spring extend type, the value refers to the length when the piston rod is extended due to spring force.

Built-in One-touch fittings∗2

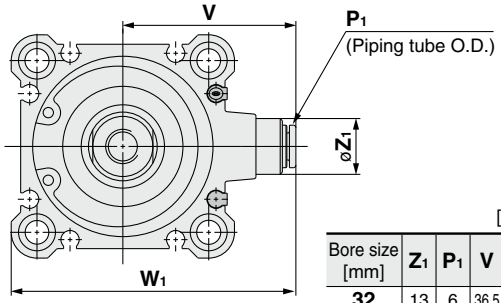

[mm]

Bore size [mm]	Z_1	P_1	V	W_1
32	13	6	36.5	59
40	13	6	40.5	66.5
50	16	8	50	82

Dimensions of Each Mounting Bracket

The dimensions of each mounting bracket are the same as those of the standard type, double acting, single rod (except the configuration of the piston rod). Refer to pages 29 to 33.

Compact Cylinder: Large Bore Size
Double Acting, Single Rod

CQ2 Series

ø125, ø140, ø160, ø180, ø200

How to Order

Without auto switch CQ2B 125 □ – 30 D C □ Z – □

With auto switch CDQ2B 125 □ – 30 D C □ Z – M9BW □ – □

With auto switch magnet ❶ ❷ ❸ ❹ ❺ ❻ ❼ ❽ ❾ ❿ ⓫

❶ Mounting

B	Through-hole/both ends tapped

∗ A through-hole type mounting bolt is available as an option. For details ⇨ p. 64

❷ Bore size

125	125 mm
140	140 mm
160	160 mm
180	180 mm
200	200 mm

❸ Port thread type

Nil	Rc
TN	NPT
TF	G

❹ Cylinder stroke

(For details on the minimum stroke for auto switch mounting ⇨ p. 145) [mm]

Bore size	Standard stroke
125, 140, 160 180, 200	10, 20, 30, 40, 50, 75 100, 125, 150, 175 200, 250, 300

∗ For the manufacturing of intermediate strokes ⇨ p. 62

❺ Action

D	Double acting

❻ Cushion

C	Rubber bumper

❼ Body option

Nil	Rod end female thread
M	Rod end male thread

❽ Auto switch mounting groove

Z	4 surfaces

❾ Auto switch

Nil	Without auto switch

∗ For applicable auto switches, refer to the table below.

❿ Number of auto switches

Nil	2
S	1
n	n

Cylinder Model with Auto Switch Magnet

If a cylinder with an auto switch magnet and without an auto switch is required, there is no need to enter the symbol for the auto switch.
(Example) CDQ2B140-30DCZ

⓫ Made to order common specifications

For details ⇨ p. 62

For details on **auto switch mounting** ⇨ p. 149 to 165

- Auto Switch Proper Mounting Position (Detection at stroke end) and Mounting Height
- Minimum Stroke for Auto Switch Mounting
- Operating Range
- Auto Switch Mounting Brackets/Part Nos.

Applicable Auto Switches / Refer to the **Web Catalog** for further information on auto switches.

Type	Special function	Electrical entry	Indicator light	Wiring (Output)	Load voltage DC		Load voltage AC	Auto switch model Perpendicular	Auto switch model In-line	Lead wire length [m] 0.5 (Nil)	1 (M)	3 (L)	5 (Z)	None (N)	Pre-wired connector	Applicable load	
Solid state auto switch	—	Grommet	Yes	3-wire (NPN)	24 V	5 V, 12 V	—	M9NV	M9N	●	●	●	○	—	○	IC circuit	Relay, PLC
				3-wire (PNP)				M9PV	M9P	●	●	●	○	—	○		
				2-wire		12 V		M9BV	M9B	●	●	●	○	—	○	—	
	Diagnostic indication (2-color indicator)			3-wire (NPN)		5 V, 12 V		M9NWV	M9NW	●	●	●	○	—	○	IC circuit	
				3-wire (PNP)				M9PWV	M9PW	●	●	●	○	—	○		
				2-wire		12 V		M9BWV	M9BW	●	●	●	○	—	○	—	
	Water resistant (2-color indicator)			3-wire (NPN)		5 V, 12 V		M9NAV∗1	M9NA∗1	○	○	●	○	—	○	IC circuit	
				3-wire (PNP)				M9PAV∗1	M9PA∗1	○	○	●	○	—	○		
				2-wire		12 V		M9BAV∗1	M9BA∗1	○	○	●	○	—	○	—	
	Magnetic field resistant (2-color indicator)			2-wire (Non-polar)		—		—	P3DWA	●	—	●	●	—	○		
Reed auto switch	—	Grommet	Yes	3-wire (NPN equivalent)	—	5 V	—	A96V	A96	●	●	●	●	—	○	IC circuit	—
				2-wire	24 V	12 V	100 V	A93V	A93	●	●	●	●	—	○∗2	—	Relay, PLC
			No			5 V, 12 V	100 V or less	A90V	A90	●	●	●	●	—	○∗2	IC circuit	

∗1 Water-resistant type auto switches can be mounted on the above models, but SMC cannot guarantee water resistance. Please contact SMC regarding water-resistant types with the above model numbers.
∗2 The load voltage used is 24 VDC.

∗ Lead wire length symbols: 0.5 m ····· Nil (Example) M9NW
1 m ····· M (Example) M9NWM
3 m ····· L (Example) M9NWL
5 m ····· Z (Example) M9NWZ

∗ Auto switches marked with a "○" are produced upon receipt of order.

∗ There are applicable auto switches other than those listed above. For details ⇨ p. 165

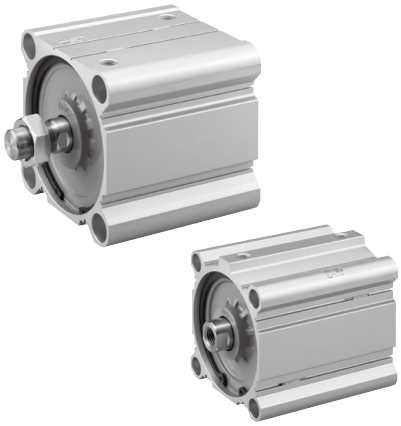

Symbol

Rubber bumper

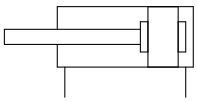

Specifications

Bore size [mm]	125	140	160	180	200
Action	Double acting, Single rod				
Fluid	Air				
Proof pressure	1.5 MPa			1.05 MPa	
Maximum operating pressure	1.0 MPa			0.7 MPa	
Minimum operating pressure	0.05 MPa				
Ambient and fluid temperatures	Without auto switch magnet: –10 to 70°C With auto switch magnet: –10 to 60°C (No freezing)				
Lubrication	Not required (Non-lube)				
Piston speed	50 to 500 mm/s			20 to 400 mm/s	
Cushion	Rubber bumper				
Allowable kinetic energy [J]	7.4	9.8	12.4		
Stroke length tolerance	$^{+1.4}_{0}$ mm∗1				

∗1 Stroke length tolerance does not include the amount of bumper change.

Manufacturing of Intermediate Strokes

Type	A spacer is installed in the standard stroke body.	Exclusive body (-XB10)
Part no.	Refer to "How to Order" for the standard model number. (⇨ p. 61)	Suffix "-XB10" to the end of standard model number. (⇨ p. 61)
Description	Strokes in 5 mm increments are available by installing a spacer in the standard stroke cylinder.	Strokes in 1 mm increments are available by using an exclusive body with the specified stroke.
Stroke range	5 to 295	11 to 299
Example	Part no.: CQ2B160-165DCZ CQ2B160-175DCZ with 10 mm width spacer inside The B dimension is 266 mm.	Part no.: CQ2B160-165DCZ-XB10 Makes 165 mm stroke tube. The B dimension is 256 mm.

Made to Order

Made to Order Common Specifications
(For details ⇨ p. 167 to 196)

Symbol	Specifications
-XA□	Change of rod end shape
-XB10	Intermediate stroke (Using exclusive body)
-XC85	Grease for food processing equipment
-X271	Fluororubber seals, ø125 to ø160 only

⚠ Precautions

Refer to page 197 before handling the products.

Allowable Kinetic Energy

Load Mass and Piston Speed

[J]

Bore size [mm]	125	140	160	180	200
Standard/ Allowable kinetic energy: **Ea**	7.4	9.8	12.4		

$$\text{Kinetic energy } E\ [J] = \frac{(m1 + m2)\ V^2}{2}$$

m1: Mass of cylinder movable parts [kg]
m2: Load mass [kg]
V: Piston speed [m/s]

Allowable Lateral Load at Rod End

Without Auto Switch Magnet

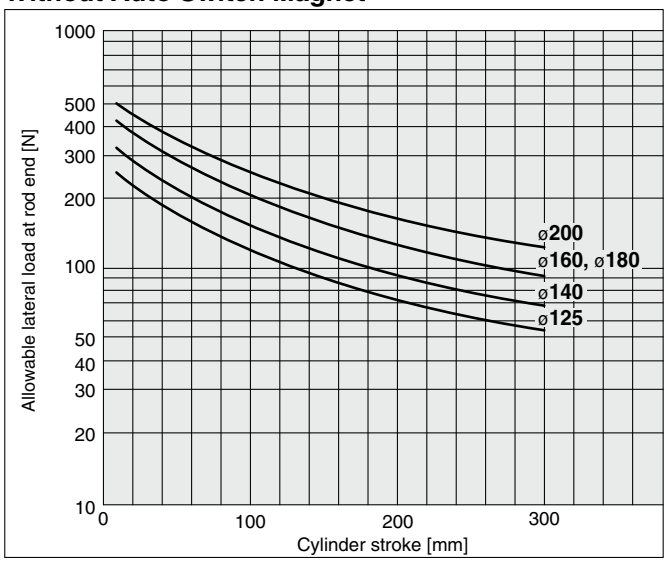

Mass of Cylinder Movable Parts: Without Auto Switch Magnet

[kg]

Bore size [mm]	Cylinder stroke [mm]												
	10	20	30	40	50	75	100	125	150	175	200	250	300
125	1.25	1.34	1.42	1.5	1.58	1.77	1.97	2.17	2.37	2.57	2.77	3.17	3.57
140	1.49	1.57	1.65	1.73	1.81	2.01	2.21	2.41	2.61	2.81	3.01	3.41	3.81
160	1.98	2.08	2.18	2.27	2.37	2.61	2.86	3.1	3.34	3.59	3.83	4.31	4.8
180	2.85	2.95	3.05	3.15	3.25	3.49	3.74	3.99	4.24	4.48	4.73	5.22	5.72
200	3.31	3.41	3.51	3.61	3.71	3.96	4.2	4.45	4.7	4.94	5.19	5.69	6.18

Mass of Cylinder Movable Parts: With Auto Switch Magnet

[kg]

Bore size [mm]	Cylinder stroke [mm]												
	10	20	30	40	50	75	100	125	150	175	200	250	300
125	1.31	1.39	1.47	1.55	1.63	1.83	2.03	2.23	2.43	2.63	2.83	3.23	3.63
140	1.56	1.64	1.72	1.8	1.88	2.08	2.28	2.48	2.68	2.88	3.08	3.48	3.88
160	2.06	2.16	2.26	2.35	2.45	2.69	2.94	3.18	3.42	3.66	3.91	4.39	4.88
180	2.93	3.03	3.13	3.23	3.33	3.57	3.82	4.07	4.32	4.56	4.81	5.3	5.8
200	3.4	3.5	3.6	3.7	3.8	4.05	4.29	4.54	4.79	5.03	5.28	5.78	6.27

Additional Mass of Cylinder Movable Parts

[kg]

Bore size [mm]		125	140	160, 180, 200
Rod end male thread	Male thread	0.3	0.3	0.48
	Nut	0.16	0.16	0.26

Calculation: (Example) **CDQ2B125-100DCMZ**
- Basic mass : CDQ2B125-100DCZ ····· 2.03 kg
- Additional mass : Rod end male thread ····· 0.46 kg

2.49 kg

Theoretical Output

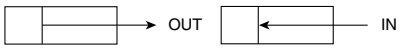

[N]

Bore size [mm]	Operating direction	Operating pressure [MPa]		
		0.3	0.5	0.7
125	IN	3376	5627	7878
	OUT	3682	6136	8590
140	IN	4313	7188	10063
	OUT	4618	7697	10776
160	IN	5655	9425	13195
	OUT	6032	10053	14074
180	IN	7257	12095	16933
	OUT	7634	12724	17813
200	IN	9048	15080	21112
	OUT	9425	15708	21991

Weight

Without Auto Switch Magnet

[kg]

Bore size [mm]	Cylinder stroke [mm]												
	10	20	30	40	50	75	100	125	150	175	200	250	300
125	3.43	3.65	3.88	4.10	4.33	4.89	5.46	6.02	6.58	7.14	7.70	8.83	9.95
140	4.17	4.43	4.69	4.94	5.20	5.84	6.48	7.12	7.76	8.40	9.04	10.32	11.60
160	5.97	6.28	6.59	6.90	7.22	7.99	8.77	9.55	10.32	11.10	11.88	13.43	14.99
180	8.56	8.96	9.35	9.74	10.14	11.12	12.11	13.09	14.08	15.06	16.05	18.02	19.99
200	10.83	11.26	11.69	12.12	12.55	13.63	14.71	15.79	16.86	17.94	19.02	21.17	23.33

With Auto Switch Magnet

[kg]

Bore size [mm]	Cylinder stroke [mm]												
	10	20	30	40	50	75	100	125	150	175	200	250	300
125	3.49	3.71	3.94	4.16	4.39	4.95	5.51	6.08	6.64	7.20	7.76	8.89	10.01
140	4.24	4.50	4.75	5.01	5.27	5.91	6.55	7.19	7.83	8.47	9.11	10.39	11.67
160	6.05	6.36	6.67	6.98	7.30	8.07	8.85	9.63	10.40	11.18	11.96	13.51	15.07
180	8.64	9.04	9.43	9.82	10.22	11.20	12.19	13.17	14.16	15.14	16.13	18.10	20.07
200	10.92	11.35	11.78	12.21	12.64	13.72	14.80	15.88	16.95	18.03	19.11	21.26	23.42

Additional Weight

[kg]

Bore size [mm]		**125**	**140**	**160 180 200**
Rod end male thread	Male thread	0.31	0.31	0.48
	Nut	0.16	0.16	0.26

Calculation: (Example) **CDQ2B125-30DCMZ**

- Basic weight: CDQ2B125-30DCZ····· 3.94 kg
- Additional weight: Rod end male thread··· 0.47 kg

4.41 kg

Through-hole Type Mounting Bolt for the C$\boxed{D}$Q2

Mounting bolt for the through-hole mounting of the C(D)Q2B is available as an option. Refer to the following for ordering procedures. Order the actual number of bolts that will be used.

Example) CQ-M12 x 100L 4 pcs.

∗ To install a through-hole type mounting bolt, make sure to use the flat washer that is provided.
∗ Mounting bolts for stroke lengths exceeding 100 mm are not available. Secure the cylinder with both ends of the cylinder tube tapped or prepare mounting bolts separately.

Type: Hexagon socket head cap screw
Material: Chromium molybdenum steel
Surface treatment: Zinc chromated

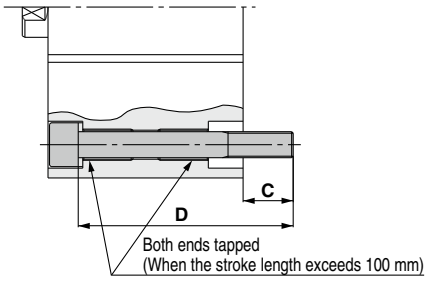

Cylinder model	C	D	Mounting bolt part no.
C$\boxed{D}$Q2B125/140-10DCZ	22.9	100	CQ-M12 x 100L
-20DCZ		110	x 110L
-30DCZ		120	x 120L
-40DCZ		130	x 130L
-50DCZ		140	x 140L
-75DCZ		165	x 165L
-100DCZ		190	x 190L
C$\boxed{D}$Q2B160-10DCZ	27.7	110	CQ-M14 x 110L
-20DCZ		120	x 120L
-30DCZ		130	x 130L
-40DCZ		140	x 140L
-50DCZ		150	x 150L
-75DCZ		175	x 175L
-100DCZ		200	x 200L

Cylinder model	C	D	Mounting bolt part no.
C$\boxed{D}$Q2B180-10DCZ	36	125	CQ-M18 x 125L
-20DCZ		135	x 135L
-30DCZ		145	x 145L
-40DCZ		155	x 155L
-50DCZ		165	x 165L
-75DCZ		190	x 190L
-100DCZ		215	x 215L
C$\boxed{D}$Q2B200-10DCZ	39	135	CQ-M18 x 135L
-20DCZ		145	x 145L
-30DCZ		155	x 155L
-40DCZ		165	x 165L
-50DCZ		175	x 175L
-75DCZ		200	x 200L
-100DCZ		225	x 225L

Construction

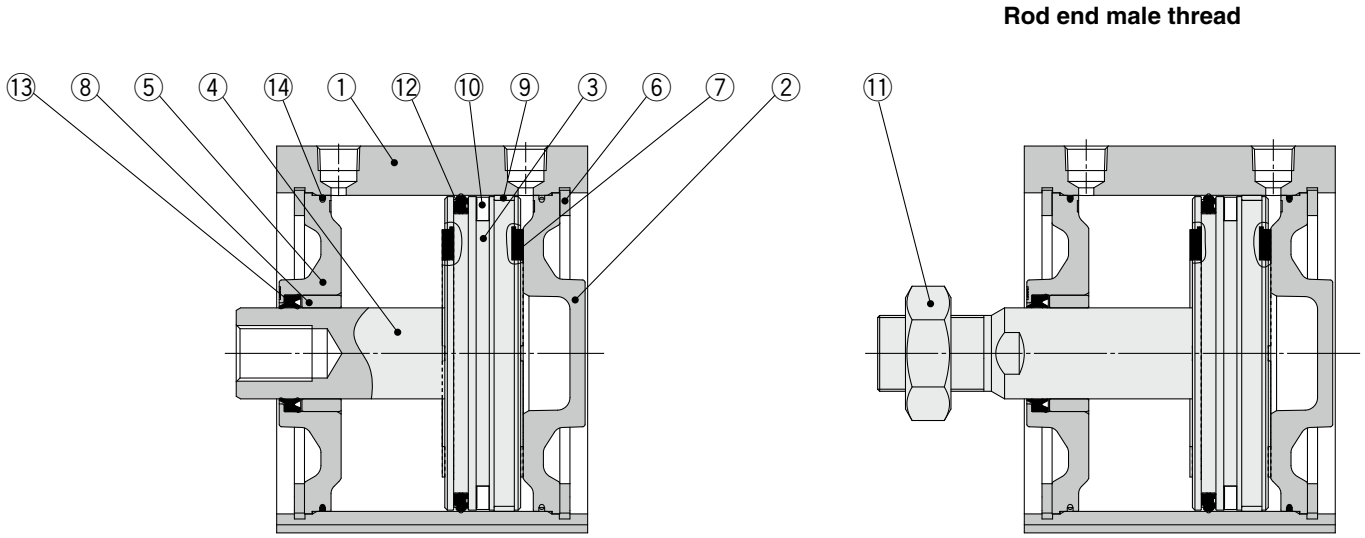

Component Parts

No.	Description	Material	Note
1	**Cylinder tube**	Aluminum alloy	Hard anodized
2	**Head cover**	Aluminum alloy casted	Chromated, Painted
3	**Piston**	Aluminum alloy	
4	**Piston rod**	Carbon steel	Hard chrome plating
5	**Rod cover**	Aluminum alloy casted	Chromated, Painted
6	**Retaining ring**	Carbon tool steel	Phosphate coated
7	**Bumper**	Urethane	
8	**Bushing**	Bearing alloy	
9	**Wear ring**	Resin	
10	**Magnet**	—	For CDQ2B□ only
11	**Rod end nut**	Carbon steel	Nickel plating
12	**Piston seal**	NBR	
13	**Rod seal**	NBR	
14	**Tube gasket**	NBR	

Replacement Parts/Seal Kit

Bore size [mm]	Kit no.	Contents
125	CQ2B125-PS	Set of nos. ⑫, ⑬, ⑭
140	CQ2B140-PS	
160	CQ2B160-PS	
180	CQ2B180-PS	
200	CQ2B200-PS	

∗ Seal kit includes ⑫, ⑬, ⑭. Order the seal kit based on each bore size.
∗ The seal kit does not include a grease pack. Order it separately.
Grease pack part no.: GR-S-010 (10 g)

Bore Size

ø125 to ø200

The dimensions are the same with or without an auto switch magnet.

Through-hole: CⒹQ2B

ø125 to ø160

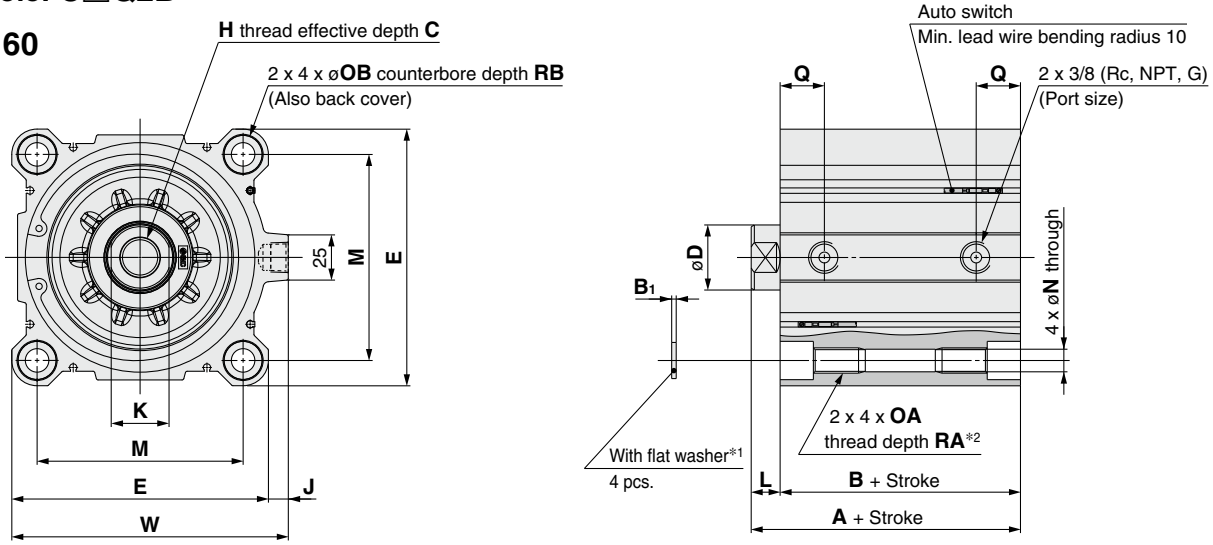

ø180, ø200

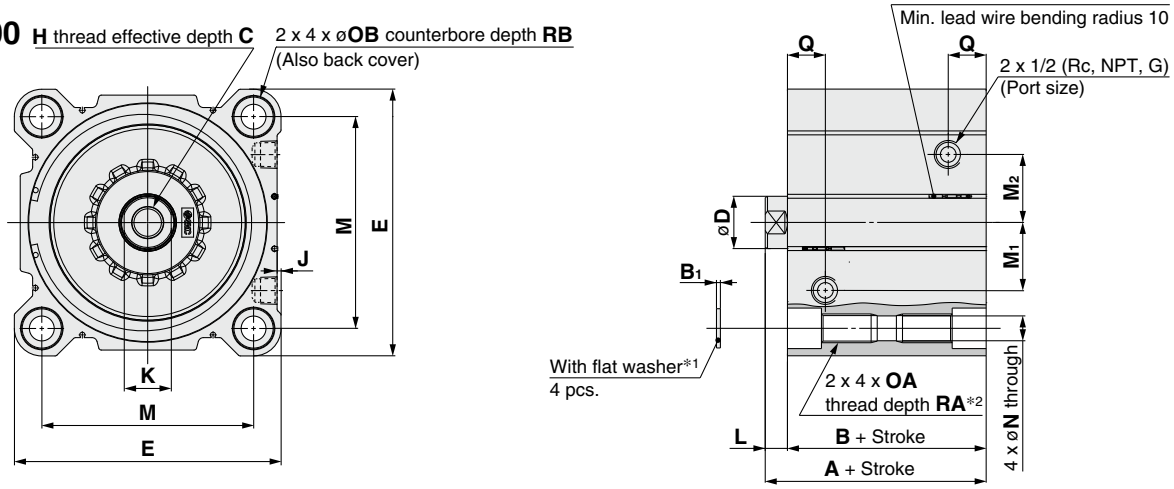

[mm]

Bore size [mm]	Standard stroke range	A	B	B_1	C	D	E	H	J	K	L	M	M_1	M_2	N	OA	OB	Q	RA	RB	W
125	10, 20, 30, 40, 50 75, 100, 125, 150 175, 200, 250, 300	99	83	2.5	30	36	142	M22 x 2.5	11	32	16	114	—	—	12.5	M14 x 2	21.2	24.5	25	18.4	153
140		99	83	2.5	30	36	158	M22 x 2.5	10	32	16	128	—	—	12.5	M14 x 2	21.2	24.5	25	18.4	168
160		108	91	2.5	33	40	178	M24 x 3	10	36	17	144	—	—	14.5	M16 x 2	24.2	27.5	28	21.2	188
180		119	102	3	33	40	204	M24 x 3	3	36	17	162	52	52	19	M22 x 2.5	31.5	29	38	26	—
200		126	109	3	33	40	226	M24 x 3	7.1	36	17	182	62	62	19	M22 x 2.5	31.5	30	38	26	—

*1 Be sure to use the attached flat washer for mounting cylinder with through-holes.
*2 For sizes ø125 to ø160 with a stroke of 10 mm or less, and for sizes ø180 and ø200 with a stroke of 20 mm or less, the product comes with an OA through thread.

Rod end male thread

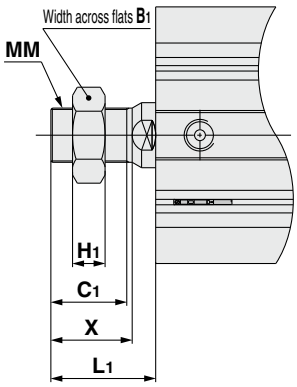

[mm]

Bore size [mm]	B_1	C_1	H_1	L_1	MM	X
125	46	42	18	58	M30 x 1.5	45
140	46	42	18	58	M30 x 1.5	45
160	55	47	21	64	M36 x 1.5	50
180	55	47	21	64	M36 x 1.5	50
200	55	47	21	64	M36 x 1.5	50

* For details on the rod end nut ⇨ p. 34

Compact Cylinder: Large Bore Size
Double Acting, Double Rod
CQ2W Series
ø125, ø140, ø160, ø180, ø200

How to Order

Without auto switch CQ2WB125 □ – 30DC □ Z – □

With auto switch CDQ2WB125 □ – 30DC □ Z – M9BW □ – □

With auto switch magnet ❶ ❷ ❸ ❹ ❺ ❻ ❼ ❽ ❾ ❿ ⓫ ⓬

❶ Type

W	Double rod

❷ Mounting

B	Through-hole/both ends tapped

∗ A through-hole type mounting bolt is available as an option. For details ⇨ p. 70

❸ Bore size

125	125 mm
140	140 mm
160	160 mm
180	180 mm
200	200 mm

❹ Port thread type

Nil	Rc
TN	NPT
TF	G

❺ Cylinder stroke (For details on the minimum stroke for auto switch mounting ⇨ p. 157) [mm]

Bore size	Standard stroke
125, 140, 160 180, 200	10, 20, 30, 40, 50, 75, 100, 125 150, 175, 200, 250, 300

∗ For the manufacturing of intermediate strokes ⇨ p. 68

❻ Action

D	Double acting

❼ Cushion

C	Rubber bumper

❽ Body option

Nil	Rod end female thread
M	Rod end male thread

❾ Auto switch mounting groove

Z	4 surfaces

❿ Auto switch

Nil	Without auto switch

∗ For applicable auto switches, refer to the table below.

⓫ Number of auto switches

Nil	2
S	1
n	n

⓬ Made to order common specifications

For details ⇨ p. 68

Cylinder Model with Auto Switch Magnet

If a cylinder with an auto switch magnet and without an auto switch is required, there is no need to enter the symbol for the auto switch.
(Example) CDQ2WB140-30DCZ

For details on **auto switch mounting** ⇨ p. 149 to 165

- Auto Switch Proper Mounting Position (Detection at stroke end) and Mounting Height
- Minimum Stroke for Auto Switch Mounting
- Operating Range
- Auto Switch Mounting Brackets/Part Nos.

Applicable Auto Switches / Refer to the **Web Catalog** for further information on auto switches.

Type	Special function	Electrical entry	Indicator light	Wiring (Output)	Load voltage DC	Load voltage DC	Load voltage AC	Auto switch model Perpendicular	Auto switch model In-line	Lead wire length [m] 0.5 (Nil)	1 (M)	3 (L)	5 (Z)	None (N)	Pre-wired connector	Applicable load	
Solid state auto switch	——	Grommet	Yes	3-wire (NPN)	24 V	5 V, 12 V	—	M9NV	M9N	●	●	●	○	—	○	IC circuit	Relay, PLC
				3-wire (PNP)				M9PV	M9P	●	●	●	○	—	○		
				2-wire		12 V		M9BV	M9B	●	●	●	○	—	○	—	
	Diagnostic indication (2-color indicator)			3-wire (NPN)		5 V, 12 V		M9NWV	M9NW	●	●	●	○	—	○	IC circuit	
				3-wire (PNP)				M9PWV	M9PW	●	●	●	○	—	○		
				2-wire		12 V		M9BWV	M9BW	●	●	●	○	—	○	—	
	Water resistant (2-color indicator)			3-wire (NPN)		5 V, 12 V		M9NAV∗1	M9NA∗1	○	○	●	○	—	○	IC circuit	
				3-wire (PNP)				M9PAV∗1	M9PA∗1	○	○	●	○	—	○		
				2-wire		12 V		M9BAV∗1	M9BA∗1	○	○	●	○	—	○	—	
	Magnetic field resistant (2-color indicator)			2-wire (Non-polar)		—		—	P3DWA	●	—	●	●	—	○		
Reed auto switch	——	Grommet	Yes	3-wire (NPN equivalent)	—	5 V	—	A96V	A96	●	●	●	●	—	○	IC circuit	—
				2-wire	24 V	12 V	100 V	A93V	A93	●	●	●	●	—	○∗2	—	Relay, PLC
			No			5 V, 12 V	100 V or less	A90V	A90	●	●	●	●	—	○∗2	IC circuit	

∗1 Water-resistant type auto switches can be mounted on the above models, but SMC cannot guarantee water resistance.
Please contact SMC regarding water-resistant types with the above model numbers.
∗2 The load voltage used is 24 VDC.

∗ Lead wire length symbols: 0.5 m ····· Nil (Example) M9NW
1 m ····· M (Example) M9NWM
3 m ····· L (Example) M9NWL
5 m ····· Z (Example) M9NWZ

∗ Auto switches marked with a "○" are produced upon receipt of order.

∗ There are applicable auto switches other than those listed above. For details ⇨ p. 165

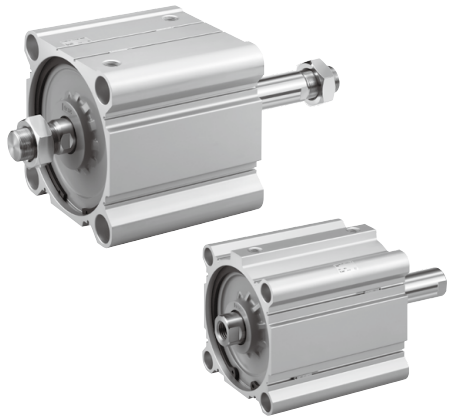

Symbol

Without cushion

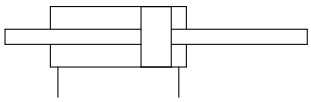

Rubber bumper

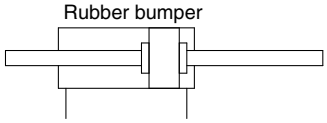

Made to Order Common Specifications
(For details ⇨ p. 167 to 196)

Symbol	Specifications
-XA□	Change of rod end shape
-XB10	Intermediate stroke (Exclusive body type)
-XC85	Grease for food processing equipment
-X235	Special rod end for double rod cylinder
-X271	Fluororubber seals, ø125 to ø160 only
-X633	Intermediate stroke for double rod cylinder

∗ -X633: Intermediate stroke in 5 mm increments only

Specifications

Bore size [mm]	125	140	160	180	200
Action	Double acting, Double rod				
Fluid	Air				
Proof pressure	1.5 MPa			1.05 MPa	
Maximum operating pressure	1.0 MPa			0.7 MPa	
Minimum operating pressure	0.05 MPa				
Ambient and fluid temperatures	Without auto switch magnet: –10 to 70°C With auto switch magnet: –10 to 60°C (No freezing)				
Lubrication	Not required (Non-lube)				
Piston speed	50 to 500 mm/s			20 to 400 mm/s	
Cushion	Rubber bumper				
Allowable kinetic energy [J]	7.4	9.8	12.4		
Stroke length tolerance	$^{+1.4}_{0}$ mm∗1				

∗1 Stroke length tolerance does not include the amount of bumper change.

Manufacturing of Intermediate Strokes

Type	A spacer is installed in the standard stroke body.	Exclusive body (-XB10)
Part no.	Suffix "-X633" to the end of standard model number. (⇨ p. 67)	Suffix "-XB10" to the end of standard model number. (⇨ p. 67)
Description	Strokes in 5 mm increments are available by installing a spacer in the standard stroke cylinder.	Strokes in 1 mm increments are available by using an exclusive body with the specified stroke.
Stroke range	15 to 295	11 to 299
Example	Part no.: CQ2WB160-165DCZ-X633 CQ2WB160-175DCZ with 10 mm width spacer inside The B dimension is 266 mm.	Part no.: CQ2WB160-165DCZ-XB10 Makes 165 mm stroke tube. The B dimension is 256 mm.

⚠ Precautions

Refer to pages 197 and 198 before handling the products.

Allowable Kinetic Energy

Load Mass and Piston Speed

[J]

Bore size [mm]	125	140	160	180	200
Standard/ Allowable kinetic energy: **Ea**	7.4	9.8	12.4		

$$\text{Kinetic energy } E\ [J] = \frac{(m1 + m2)\ V^2}{2}$$

m1: Mass of cylinder movable parts [kg]
m2: Load mass [kg]
V: Piston speed [m/s]

Allowable Lateral Load at Rod End

Without Auto Switch Magnet

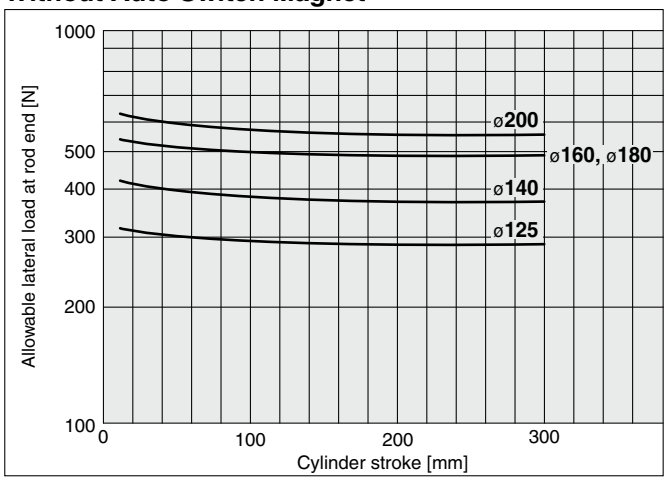

Mass of Cylinder Movable Parts: Without Auto Switch Magnet

[kg]

Bore size [mm]	Cylinder stroke [mm]												
	10	20	30	40	50	75	100	125	150	175	200	250	300
125	1.58	1.71	1.85	2.01	2.17	2.57	2.96	3.36	3.76	4.16	4.56	5.36	6.15
140	1.82	1.95	2.08	2.24	2.4	2.8	3.2	3.6	3.99	4.39	4.79	5.59	6.38
160	2.42	2.58	2.75	2.94	3.14	3.63	4.12	4.61	5.1	5.58	6.07	7.05	8.03
180	3.96	4.12	4.23	4.43	4.63	4.97	5.47	5.96	6.46	6.95	7.83	8.43	9.42
200	4.75	4.91	5.02	5.22	5.42	5.76	6.26	6.75	7.25	7.74	8.62	9.22	10.2

Mass of Cylinder Movable Parts: With Auto Switch Magnet

[kg]

Bore size [mm]	Cylinder stroke [mm]												
	10	20	30	40	50	75	100	125	150	175	200	250	300
125	1.65	1.77	1.91	2.07	2.23	2.63	3.03	3.42	3.82	4.22	4.62	5.42	6.21
140	1.88	2.01	2.15	2.31	2.47	2.87	3.26	3.66	4.06	4.46	4.86	5.66	6.45
160	2.5	2.65	2.82	3.02	3.22	3.71	4.2	4.68	5.17	5.66	6.15	7.13	8.11
180	4.04	4.2	4.31	4.51	4.71	5.05	5.55	6.04	6.54	7.03	7.91	8.51	9.5
200	4.84	5	5.11	5.31	5.51	5.85	6.35	6.84	7.34	7.83	8.71	9.31	10.3

Additional Mass of Cylinder Movable Parts

[kg]

Bore size [mm]		125	140	160, 180, 200
Rod end male thread	Male thread	0.62	0.62	0.96
	Nut	0.32	0.32	0.52

Calculation: (Example) **CDQ2WB125-100DCMZ**
- Basic mass : CDQ2WB125-100DCZ ····· 3.03 kg
- Additional mass : Rod end male thread ····· 0.94 kg

3.97 kg

Theoretical Output

[N]

Bore size [mm]	Operating pressure [MPa]		
	0.3	0.5	0.7
125	3376	5627	7878
140	4313	7188	10063
160	5655	9425	13195
180	7257	12095	16933
200	9048	15080	21112

Weight

Without Auto Switch Magnet [kg]

Bore size [mm]	Cylinder stroke [mm]												
	10	20	30	40	50	75	100	125	150	175	200	250	300
125	3.81	4.10	4.40	4.70	4.98	5.75	6.50	7.25	8.00	8.75	9.50	11.00	12.50
140	4.56	4.88	5.21	5.54	5.85	6.69	7.53	8.34	9.17	9.99	10.82	12.47	14.12
160	6.49	6.88	7.28	7.68	8.07	9.09	10.11	11.11	12.12	13.12	14.13	16.15	18.16
180	9.10	9.58	10.07	10.55	11.03	12.26	13.49	14.69	15.91	17.13	18.34	20.78	23.21
200	11.42	11.93	12.48	13.03	13.51	14.83	16.15	17.47	18.80	20.12	21.44	24.09	26.73

With Auto Switch Magnet [kg]

Bore size [mm]	Cylinder stroke [mm]												
	10	20	30	40	50	75	100	125	150	175	200	250	300
125	3.87	4.16	4.46	4.76	5.04	5.81	6.56	7.31	8.06	8.81	9.56	11.06	12.56
140	4.62	4.94	5.27	5.60	5.92	6.76	7.59	8.41	9.23	10.06	10.88	12.53	14.18
160	6.57	6.96	7.36	7.76	8.15	9.17	10.19	11.19	12.20	13.20	14.21	16.23	18.24
180	9.18	9.66	10.15	10.63	11.11	12.34	13.57	14.77	15.99	17.21	18.42	20.86	23.29
200	11.51	12.02	12.57	13.12	13.60	14.92	16.24	17.56	18.89	20.21	21.53	24.18	26.82

Additional Weight [kg]

Bore size [mm]		**125**	**140**	**160 180 200**
Rod end male thread	Male thread	0.62	0.62	0.96
	Nut	0.32	0.32	0.52

Calculation: (Example) **CDQ2WB125-30DCMZ**
- Basic weight: CDQ2WB125-30DCZ ····4.46 kg
- Additional weight: Rod end male thread ·····0.94 kg

5.4 kg

Through-hole Type Mounting Bolt for the C□Q2W

Mounting bolt for the through-hole mounting of the C(D)Q2WB is available as an option.
Refer to the following for ordering procedures. Order the actual number of bolts that will be used.

Example) CQ-M12 x 100L 4 pcs.

- To install a through-hole type mounting bolt, make sure to use the flat washer that is provided.
- Mounting bolts for stroke lengths exceeding 100 mm are not available. Secure the cylinder with both ends of the cylinder tube tapped or prepare mounting bolts separately.

Type: Hexagon socket head cap screw
Material: Chromium molybdenum steel
Surface treatment: Zinc chromated

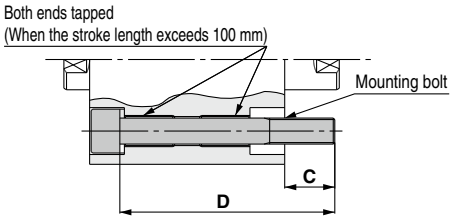

Cylinder model	C	D	Mounting bolt part no.
C□Q2WB125/140-10DCZ	22.9	100	CQ-M12 x 100L
-20DCZ		110	x 110L
-30DCZ		120	x 120L
-40DCZ		130	x 130L
-50DCZ		140	x 140L
-75DCZ		165	x 165L
-100DCZ		190	x 190L
C□Q2WB160-10DCZ	27.7	110	CQ-M14 x 110L
-20DCZ		120	x 120L
-30DCZ		130	x 130L
-40DCZ		140	x 140L
-50DCZ		150	x 150L
-75DCZ		175	x 175L
-100DCZ		200	x 200L

Cylinder model	C	D	Mounting bolt part no.
C□Q2WB180-10DCZ	36	125	CQ-M18 x 125L
-20DCZ		135	x 135L
-30DCZ		145	x 145L
-40DCZ		155	x 155L
-50DCZ		165	x 165L
-75DCZ		190	x 190L
-100DCZ		215	x 215L
C□Q2WB200-10DCZ	39	135	CQ-M18 x 135L
-20DCZ		145	x 145L
-30DCZ		155	x 155L
-40DCZ		165	x 165L
-50DCZ		175	x 175L
-75DCZ		200	x 200L
-100DCZ		225	x 225L

Construction

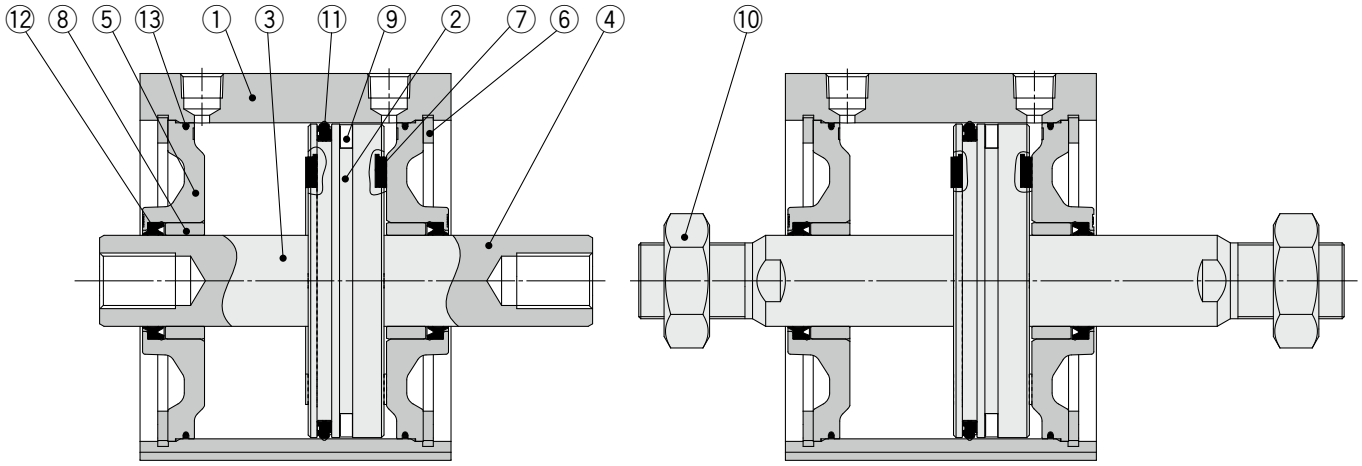

Rod end male thread

Component Parts

No.	Description	Material	Note
1	**Cylinder tube**	Aluminum alloy	Hard anodized
2	**Piston**	Aluminum alloy	
3	**Piston rod A**	Carbon steel	Hard chrome plating
4	**Piston rod B**	Carbon steel	Hard chrome plating
5	**Rod cover**	Aluminum alloy casted	Chromated, Painted
6	**Retaining ring**	Carbon tool steel	Phosphate coated
7	**Bumper**	Urethane	
8	**Bushing**	Bearing alloy	
9	**Magnet**	—	For CDQ2WB□ only
10	**Rod end nut**	Carbon steel	Nickel plating
11	**Piston seal**	NBR	
12	**Rod seal**	NBR	
13	**Tube gasket**	NBR	
14	**Piston gasket**	NBR	

Replacement Parts/Seal Kit

Bore size [mm]	Kit no.	Contents
125	CQ2WB125-PS	Set of nos. ⑪, ⑫, ⑬
140	CQ2WB140-PS	
160	CQ2WB160-PS	
180	CQ2WB180-PS	
200	CQ2WB200-PS	

∗ Seal kit includes ⑪, ⑫, ⑬. Order the seal kit based on each bore size.
∗ The seal kit does not include a grease pack. Order it separately.
Grease pack part no.: GR-S-010 (10 g)

Bore Size

ø125 to ø200

The dimensions are the same with or without an auto switch magnet.

Through-hole: CⒹQ2WB

ø125 to ø160

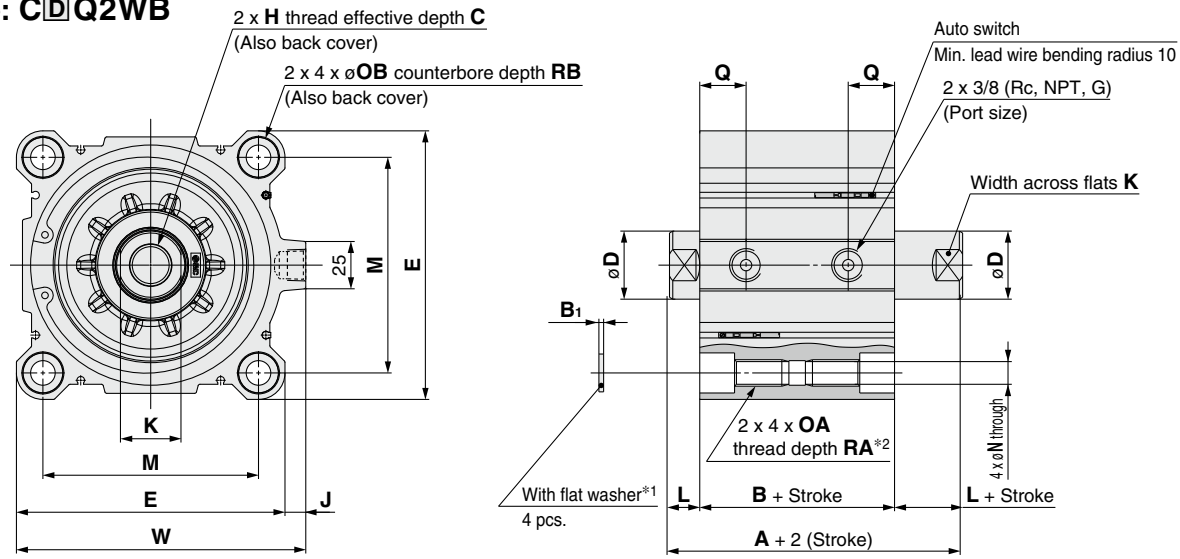

ø180, ø200

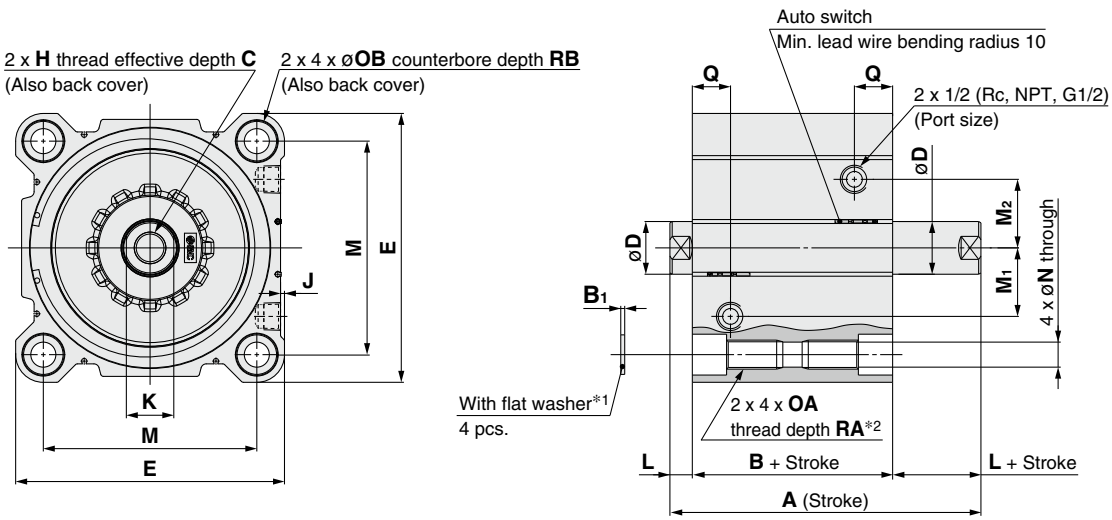

[mm]

Bore size [mm]	Standard stroke range	A	B	B1	C*3	D	E	H	J	K	L	M	M1	M2	N	OA	OB	Q	RA	RB	W
125	10, 20, 30, 40, 50 75, 100, 125, 150 175, 200, 250, 300	115	83	2.5	30 (22.5)	36	142	M22 x 2.5	11	32	16	114	—	—	12.5	M14 x 2	21.2	24.5	25	18.4	153
140		115	83	2.5	30 (22.5)	36	158	M22 x 2.5	10	32	16	128	—	—	12.5	M14 x 2	21.2	24.5	25	18.4	168
160		125	91	2.5	33 (26.5)	40	178	M24 x 3	10	36	17	144	—	—	14.5	M16 x 2	24.2	27.5	28	21.2	188
180		136	102	3	33	40	204	M24 x 3	3	36	17	162	52	52	19	M22 x 2.5	31.5	29	38	26	—
200		143	109	3	33	40	226	M24 x 3	7.1	36	17	182	62	62	19	M22 x 2.5	31.5	30	38	26	—

*1 Be sure to use the attached flat washer for mounting cylinder with through-holes.
*2 For sizes ø125 to ø160 with a stroke of 10 mm or less, and for sizes ø180 and ø200 with a stroke of 20 mm or less, the product comes with an OA through thread.
*3 ( ): Values of effective length in one side for 10 mm stroke model
* The positions of double rod width across flats are not the same.

Rod end male thread

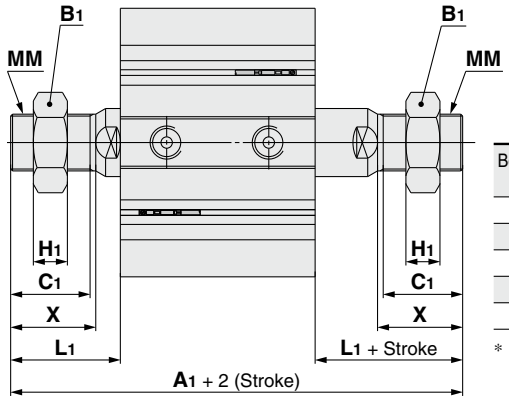

[mm]

Bore size [mm]	A1	B1	C1	H1	L1	MM	X
125	199	46	42	18	58	M30 x 1.5	45
140	199	46	42	18	58	M30 x 1.5	45
160	219	55	47	21	64	M36 x 1.5	50
180	230	55	47	21	64	M36 x 1.5	50
200	237	55	47	21	64	M36 x 1.5	50

* For details on the rod end nut ⇨ p. 34

Compact Cylinder: Anti-lateral Load

CQ2□S Series

ø32, ø40, ø50, ø63, ø80, ø100

How to Order

Without auto switch CQ2 B S 32 □ – 30 D □ C □ Z – □

With auto switch CDQ2 B S 32 □ – 30 D □ C □ Z – M9BW □ – □

❶ ❷ ❸ ❹ ❺ ❻ ❼ ❽ ❾ ❿ ⓫ ⓬ ⓭

With auto switch magnet
The overall length of the cylinder with an auto switch magnet is longer than that of the cylinder without an auto switch magnet by the length of the built-in magnet. For details, refer to the dimensions of each size.

❶ Mounting

B	Through-hole
A	Both ends tapped
L	Foot
LC	Compact foot
F	Rod flange
G	Head flange
D	Double clevis

∗ Mounting brackets are shipped together with the product but do not come assembled.
∗ A through-hole type mounting bolt is available as an option. For details ⇨ p. 77
∗ For cylinders with mounting options "L," "LC," or "F," the cylinder rod protrusion dimensions (Dimensions L and L_1) vary from the standard cylinder. When only ordering the cylinder, order the rod end length increased by 10 mm (-XC2) cylinder. For details ⇨ p. 178

❷ Type

S	Anti-lateral load

❸ Bore size

32	32 mm
40	40 mm
50	50 mm
63	63 mm
80	80 mm
100	100 mm

❹ Port thread type

Nil	Rc
TN	NPT
TF	G
F	Built-in One-touch fittings∗1

∗1 The bore sizes available with One-touch fittings are ø32 to ø63.

❺ Cylinder stroke (For details on the minimum stroke for auto switch mounting ⇨ p. 157) [mm]

Bore size	Standard stroke
32, 40	5, 10, 15, 20, 25, 30, 35, 40, 45, 50, 75, 100
50, 63, 80, 100	10, 15, 20, 25, 30, 35, 40, 45, 50, 75, 100

∗ For the manufacturing of intermediate strokes ⇨ p. 75

❻ Action

D	Double acting

❼ Body option 1

Nil	Standard
F	With boss on head end

❽ Cushion

C	Rubber bumper

❾ Body option 2

Nil	Rod end female thread
M	Rod end male thread

❿ Auto switch mounting groove

Z	4 surfaces

⓫ Auto switch

Nil	Without auto switch

∗ For applicable auto switches ⇨ p. 74

⓬ Number of auto switches

Nil	2
S	1
n	n

⓭ Made to order common specifications

For details ⇨ p. 75

Cylinder Model with Auto Switch Magnet

If a cylinder with an auto switch magnet and without an auto switch is required, there is no need to enter the symbol for the auto switch.
(Example) CDQ2LS40-30DCZ

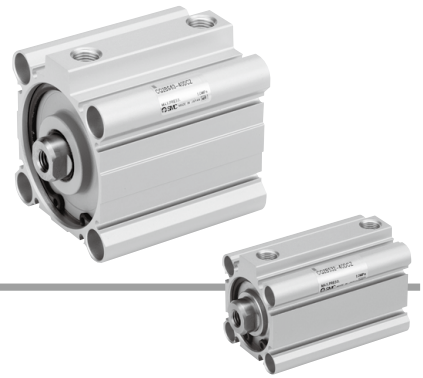

For details on **auto switch mounting** ⇨ p. 149 to 165

- Auto Switch Proper Mounting Position (Detection at stroke end) and Mounting Height
- Minimum Stroke for Auto Switch Mounting
- Operating Range
- Auto Switch Mounting Brackets/Part Nos.

Applicable Auto Switches / Refer to the **Web Catalog** for further information on auto switches.

Type	Special function	Electrical entry	Indicator light	Wiring (Output)	Load voltage DC	Load voltage DC	Load voltage AC	Auto switch model Perpendicular	Auto switch model In-line	Lead wire length [m] 0.5 (Nil)	1 (M)	3 (L)	5 (Z)	None (N)	Pre-wired connector	Applicable load	
Solid state auto switch	——	Grommet	Yes	3-wire (NPN)	24 V	5 V, 12 V	—	**M9NV**	**M9N**	●	●	●	○	—	○	IC circuit	Relay, PLC
				3-wire (PNP)				**M9PV**	**M9P**	●	●	●	○	—	○		
				2-wire		12 V		**M9BV**	**M9B**	●	●	●	○	—	○	—	
	Diagnostic indication (2-color indicator)			3-wire (NPN)		5 V, 12 V		**M9NWV**	**M9NW**	●	●	●	○	—	○	IC circuit	
				3-wire (PNP)				**M9PWV**	**M9PW**	●	●	●	○	—	○		
				2-wire		12 V		**M9BWV**	**M9BW**	●	●	●	○	—	○	—	
	Water resistant (2-color indicator)			3-wire (NPN)		5 V, 12 V		**M9NAV**∗1	**M9NA**∗1	○	○	●	○	—	○	IC circuit	
				3-wire (PNP)				**M9PAV**∗1	**M9PA**∗1	○	○	●	○	—	○		
				2-wire		12 V		**M9BAV**∗1	**M9BA**∗1	○	○	●	○	—	○	—	
	Magnetic field resistant (2-color indicator)			2-wire (Non-polar)		—		—	**P3DWA**	●	—	●	●	—	○		
Reed auto switch	——	Grommet	Yes	3-wire (NPN equivalent)	—	5 V	—	**A96V**	**A96**	●	●	●	●	—	○	IC circuit	—
				2-wire	24 V	12 V	100 V	**A93V**	**A93**	●	●	●	●	—	○∗2	—	Relay, PLC
			No			5 V,12 V	100 V or less	**A90V**	**A90**	●	●	●	●	—	○∗2	IC circuit	

∗1 Water-resistant type auto switches can be mounted on the models on page 73, but SMC cannot guarantee water resistance.
Please contact SMC regarding water-resistant types with the model numbers on page 73.
∗2 The load voltage used is 24 VDC.

∗ Lead wire length symbols: 0.5 m ····· Nil (Example) M9NW
1 m ····· M (Example) M9NWM
3 m ····· L (Example) M9NWL
5 m ····· Z (Example) M9NWZ

∗ Auto switches marked with a "○" are produced upon receipt of order.

∗ There are applicable auto switches other than those listed above. For details ⇨ p. 165

Symbol

Rubber bumper

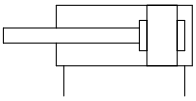

Made to Order Common Specifications (For details ⇨ p. 167 to 196)

Symbol	Specifications
-XA□	Change of rod end shape
-XB10	Intermediate stroke (Exclusive body type)
-XC2(A)	Rod end length increased by 10 mm (For foot and flange bracket)
-XC6	Piston rod/Retaining ring/Rod end nut material: Stainless steel
-XC26	With split pins for double clevis pin/ double knuckle joint pin and flat washers
-XC26□	Double clevis width/Double knuckle width 12.5 mm, 16.5 mm, or 19.5 mm: With double clevis and double knuckle joint
-XC27	Double clevis pin/Double knuckle joint pin material: Stainless steel 304
-XC85	Grease for food processing equipment
-XC88	Spatter-resistant coil scraper, Lube-retainer, Grease for welding (Piston rod: Stainless steel 304)
-XC89	Spatter-resistant coil scraper, Lube-retainer, Grease for welding (Piston rod: S45C)
-X271	Fluororubber seals
-X1876	Cylinder tube: With concave boss on head end

∗ Stainless steel accessories are also available. For details ⇨ p. 34

Specifications

Bore size [mm]	32	40	50	63	80	100
Action	Double acting, Single rod					
Fluid	Air					
Proof pressure	1.5 MPa					
Maximum operating pressure	1.0 MPa					
Minimum operating pressure	0.05 MPa					
Ambient and fluid temperatures	Without auto switch magnet: –10 to 70°C With auto switch magnet: –10 to 60°C (No freezing)					
Lubrication	Not required (Non-lube)					
Piston speed	50 to 500 mm/s					
Cushion	Rubber bumper					
Allowable kinetic energy [J]	0.29	0.52	0.91	1.54	2.71	4.54
Stroke length tolerance	$^{+1.0}_{0}$ mm∗1					

∗1 Stroke length tolerance does not include the amount of dumper change.

Manufacturing of Intermediate Strokes

Type	A spacer is installed in the standard stroke body.		Exclusive body (-XB10)	
Part no.	Refer to "How to Order" for the standard model number. (⇨ p. 73)		Suffix "-XB10" to the end of standard model number. (⇨ p. 73)	
Description	Strokes in 1 mm increments are available by installing a spacer in the standard stroke cylinder.		Strokes in 1 mm increments are available by using an exclusive body with the specified stroke.	
Stroke range	Bore size	Stroke range	Bore size	Stroke range
	32 to 100	1 to 99	32, 40	6 to 99
			50 to 100	11 to 99
Example	Part no.: CQ2BS50-57DCZ CQ2BS50-75DCZ with 18 mm width spacer inside The B dimension is 125.5 mm.		Part no.: CQ2BS50-57DCZ-XB10 Makes 57 stroke tube. The B dimension is 107.5 mm.	

• In the case of exclusive body type with ø32 to ø100 (-XB10) with the stroke length exceeding 50 mm, reference values of the longitudinal dimension will be changed.
Calculate length dimensions by deducting from those of 75 or 100 mm stroke models.

Mounting Bracket Part Nos.

Bore size [mm]	Foot∗1	Compact foot∗1	Flange	Double clevis	Double clevis pivot bracket
32	CQ-L032	CQ-LC032	CQ-F032	CQ-D032	CQ-C032
40	CQ-L040	CQ-LC040	CQ-F040	CQ-D040	CQ-C040
50	CQ-L050	CQ-LC050	CQ-F050	CQ-D050	CQ-C050
63	CQ-L063	CQ-LC063	CQ-F063	CQ-D063	CQ-C063
80	CQ-L080	CQ-LC080	CQ-F080	CQ-D080	CQ-C080
100	CQ-L100	CQ-LC100	CQ-F100	CQ-D100	CQ-C100

∗1 When ordering foot and compact foot brackets, order 2 pieces per cylinder.
∗ Parts included with each type of bracket are as follows.
Foot, Compact foot, Flange: Body mounting bolts, Double clevis: Clevis pin, Type C retaining rings for axis, Body mounting bolts
∗ For details on accessory brackets (Options) ⇨ p. 29 to 36
∗ Foot, compact foot, flange brackets, etc., cannot be retrofitted for through-hole mounting (B).

Dimensions of Each Mounting Bracket

The dimensions of each mounting bracket are the same as those of the standard type, double acting, single rod (except the configuration of the piston rod). Refer to pages 29 to 33.

⚠ Precautions

Refer to page 197 before handling the products.

Allowable Lateral Load at Rod End

Without Auto Switch Magnet

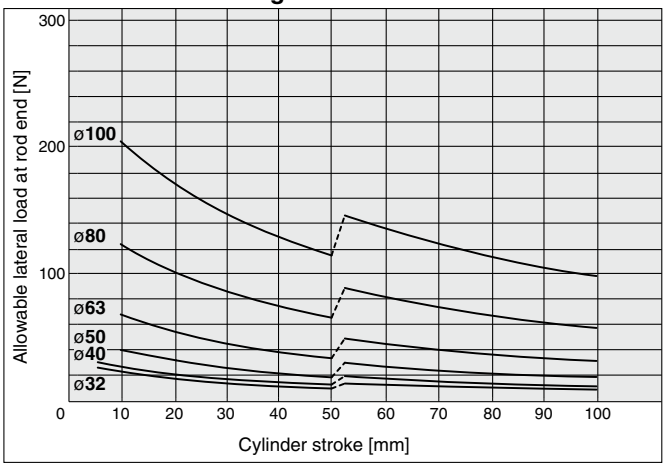

With Auto Switch Magnet

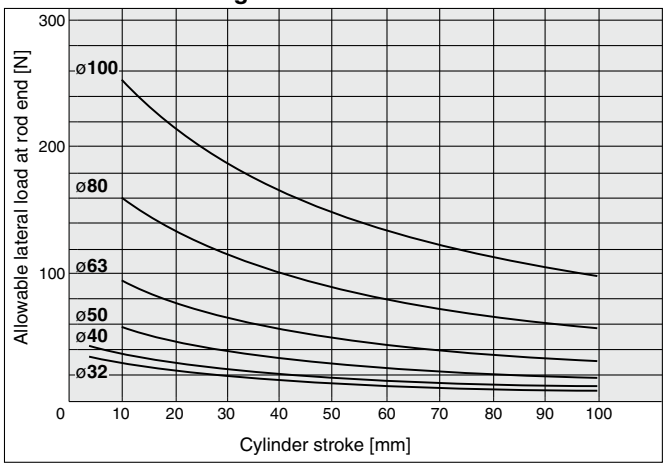

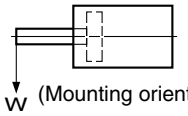

(Mounting orientation: Horizontal)

Weight

Without Auto Switch Magnet

[g]

Bore size [mm]	Cylinder stroke [mm]											
	5	10	15	20	25	30	35	40	45	50	75	100
32	134	154	174	193	213	233	252	272	291	311	457	556
40	211	232	254	275	297	318	340	361	383	404	577	689
50	—	369	402	435	467	500	533	566	598	632	902	1073
63	—	557	595	633	671	709	747	786	824	862	1189	1386
80	—	983	1043	1104	1164	1224	1284	1345	1405	1465	1985	2281
100	—	1711	1792	1872	1952	2033	2113	2194	2274	2354	3086	3494

With Auto Switch Magnet

[g]

Bore size [mm]	Cylinder stroke [mm]											
	5	10	15	20	25	30	35	40	45	50	75	100
32	191	211	230	250	270	289	309	329	348	368	468	567
40	284	305	327	348	369	391	412	434	455	477	589	701
50	—	480	513	546	579	611	644	677	710	743	915	1087
63	—	710	748	787	825	863	901	939	977	1015	1211	1408
80	—	1229	1289	1350	1410	1470	1530	1591	1651	1711	2008	2305
100	—	2070	2150	2231	2311	2391	2472	2552	2633	2713	3121	3529

Additional Weight

[g]

Bore size [mm]		32	40	50	63	80	100
Both ends tapped		6	6	6	19	45	45
Rod end male thread	Male thread	26	27	53	53	120	175
	Nut	17	17	32	32	49	116
With boss on head end		5	7	13	25	45	96
Foot (Including mounting bolts)		120	138	219	297	589	968
Compact foot (Including mounting bolts)		94	109	172	234	492	762
Rod flange (Including mounting bolts)		180	214	373	559	1056	1365
Head flange (Including mounting bolts)		165	198	348	534	1017	1309
Double clevis (Including pin, retaining rings, bolts)		151	196	393	554	1109	1887

Calculation: (Example) **CDQ2DS32-20DCMZ**

- Basic weight : CDQ2BS32-20DCZ···· 250 g
- Additional weight: Both ends tapped····· 6 g
  Rod end male thread····· 43 g
  Double clevis ·····151 g
  450 g

Add each weight of auto switches when auto switches are mounted.

Theoretical Output

[N]

Bore size [mm]	Operating direction	Operating pressure [MPa]		
		0.3	0.5	0.7
32	IN	181	302	422
	OUT	241	402	563
40	IN	317	528	739
	OUT	377	628	880
50	IN	495	825	1155
	OUT	589	982	1374
63	IN	841	1402	1962
	OUT	935	1559	2182
80	IN	1361	2268	3175
	OUT	1508	2513	3519
100	IN	2144	3574	5003
	OUT	2356	3927	5498

Through-hole Type Mounting Bolt for the CQ2□S: Without Auto Switch Magnet

Mounting bolt for the through-hole mounting of the CQ2BS is available as an option. Refer to the following for ordering procedures. Order the actual number of bolts that will be used.

Example) CQ-M5 x 40L 4 pcs.

Type: Hexagon socket head cap screw
Material: Chromium molybdenum steel
Surface treatment: Zinc chromated

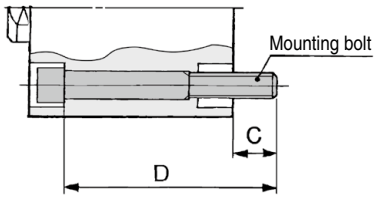

Cylinder model	C	D	Mounting bolt part no.
CQ2BS32-5DCZ	9	40	CQ-M5 x 40L
-10DCZ		45	x 45L
-15DCZ		50	x 50L
-20DCZ		55	x 55L
-25DCZ		60	x 60L
-30DCZ		65	x 65L
-35DCZ		70	x 70L
-40DCZ		75	x 75L
-45DCZ		80	x 80L
-50DCZ		85	x 85L
-75DCZ		120	x 120L
-100DCZ		145	x 145L
CQ2BS40-5DCZ	7.5	45	CQ-M5 x 45L
-10DCZ		50	x 50L
-15DCZ		55	x 55L
-20DCZ		60	x 60L
-25DCZ		65	x 65L
-30DCZ		70	x 70L
-35DCZ		75	x 75L
-40DCZ		80	x 80L
-45DCZ		85	x 85L
-50DCZ		90	x 90L
-75DCZ		125	x 125L
-100DCZ		150	x 150L
CQ2BS50-10DCZ	12.5	55	CQ-M6 x 55L
-15DCZ		60	x 60L
-20DCZ		65	x 65L
-25DCZ		70	x 70L
-30DCZ		75	x 75L
-35DCZ		80	x 80L
-40DCZ		85	x 85L
-45DCZ		90	x 90L
-50DCZ		95	x 95L
-75DCZ		130	x 130L
-100DCZ		155	x 155L

Cylinder model	C	D	Mounting bolt part no.
CQ2BS63-10DCZ	14.5	60	CQ-M8 x 60L
-15DCZ		65	x 65L
-20DCZ		70	x 70L
-25DCZ		75	x 75L
-30DCZ		80	x 80L
-35DCZ		85	x 85L
-40DCZ		90	x 90L
-45DCZ		95	x 95L
-50DCZ		100	x 100L
-75DCZ		135	x 135L
-100DCZ		160	x 160L
CQ2BS80-10DCZ	15	65	CQ-M10 x 65L
-15DCZ		70	x 70L
-20DCZ		75	x 75L
-25DCZ		80	x 80L
-30DCZ		85	x 85L
-35DCZ		90	x 90L
-40DCZ		95	x 95L
-45DCZ		100	x 100L
-50DCZ		105	x 105L
-75DCZ		140	x 140L
-100DCZ		165	x 165L
CQ2BS100-10DCZ	15.5	75	CQ-M10 x 75L
-15DCZ		80	x 80L
-20DCZ		85	x 85L
-25DCZ		90	x 90L
-30DCZ		95	x 95L
-35DCZ		100	x 100L
-40DCZ		105	x 105L
-45DCZ		110	x 110L
-50DCZ		115	x 115L
-75DCZ		150	x 150L
-100DCZ		175	x 175L

Through-hole Type Mounting Bolt for the CDQ2□S: With Auto Switch Magnet

Cylinder model	C	D	Mounting bolt part no.
CDQ2BS32-5DCZ	9	50	CQ-M5 x 50L
-10DCZ		55	x 55L
-15DCZ		60	x 60L
-20DCZ		65	x 65L
-25DCZ		70	x 70L
-30DCZ		75	x 75L
-35DCZ		80	x 80L
-40DCZ		85	x 85L
-45DCZ		90	x 90L
-50DCZ		95	x 95L
-75DCZ		120	x 120L
-100DCZ		145	x 145L
CDQ2BS40-5DCZ	7.5	55	CQ-M5 x 55L
-10DCZ		60	x 60L
-15DCZ		65	x 65L
-20DCZ		70	x 70L
-25DCZ		75	x 75L
-30DCZ		80	x 80L
-35DCZ		85	x 85L
-40DCZ		90	x 90L
-45DCZ		95	x 95L
-50DCZ		100	x 100L
-75DCZ		125	x 125L
-100DCZ		150	x 150L
CDQ2BS50-10DCZ	12.5	65	CQ-M6 x 65L
-15DCZ		70	x 70L
-20DCZ		75	x 75L
-25DCZ		80	x 80L
-30DCZ		85	x 85L
-35DCZ		90	x 90L
-40DCZ		95	x 95L
-45DCZ		100	x 100L
-50DCZ		105	x 105L
-75DCZ		130	x 130L
-100DCZ		155	x 155L

Cylinder model	C	D	Mounting bolt part no.
CDQ2BS63-10DCZ	14.5	70	CQ-M8 x 70L
-15DCZ		75	x 75L
-20DCZ		80	x 80L
-25DCZ		85	x 85L
-30DCZ		90	x 90L
-35DCZ		95	x 95L
-40DCZ		100	x 100L
-45DCZ		105	x 105L
-50DCZ		110	x 110L
-75DCZ		135	x 135L
-100DCZ		160	x 160L
CDQ2BS80-10DCZ	15	75	CQ-M10 x 75L
-15DCZ		80	x 80L
-20DCZ		85	x 85L
-25DCZ		90	x 90L
-30DCZ		95	x 95L
-35DCZ		100	x 100L
-40DCZ		105	x 105L
-45DCZ		110	x 110L
-50DCZ		115	x 115L
-75DCZ		140	x 140L
-100DCZ		165	x 165L
CDQ2BS100-10DCZ	15.5	85	CQ-M10 x 85L
-15DCZ		90	x 90L
-20DCZ		95	x 95L
-25DCZ		100	x 100L
-30DCZ		105	x 105L
-35DCZ		110	x 110L
-40DCZ		115	x 115L
-45DCZ		120	x 120L
-50DCZ		125	x 125L
-75DCZ		150	x 150L
-100DCZ		175	x 175L

Construction

Without auto switch magnet

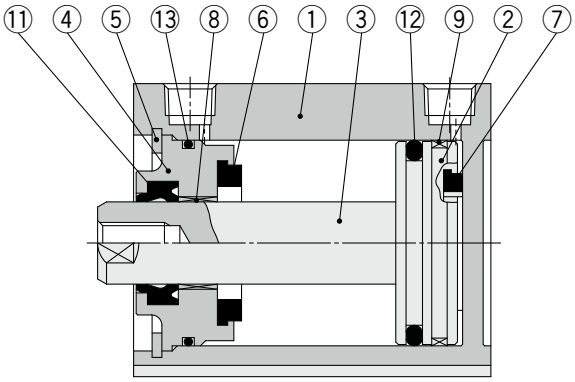

Rod end male thread

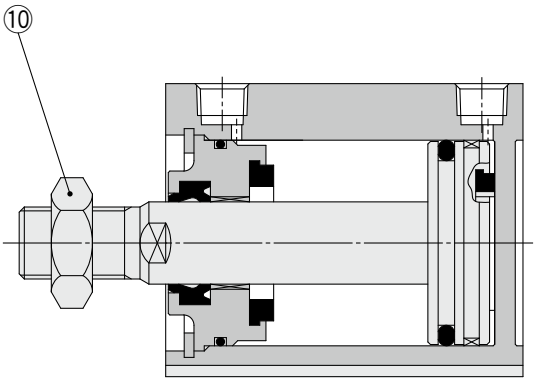

With auto switch magnet

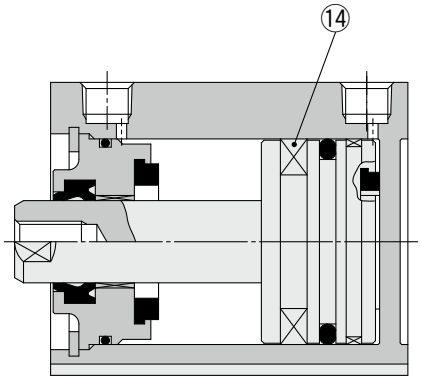

Component Parts

No.	Description	Material	Note
1	**Cylinder tube**	Aluminum alloy	Hard anodized
2	**Piston**	Aluminum alloy	
3	**Piston rod**	Carbon steel	Hard chrome plating
4	**Collar**	Aluminum alloy	Anodized
5	**Retaining ring**	Carbon tool steel	Phosphate coated
6	**Bumper A**	Urethane	
7	**Bumper B**	Urethane	
8	**Bushing**	Bearing alloy	
9	**Wear ring**	Resin	
10	**Rod end nut**	Carbon steel	Zinc chromated
11	**Rod seal**	NBR	
12	**Piston seal**	NBR	
13	**Tube gasket**	NBR	
14	**Magnet**	—	

Replacement Parts/Seal Kit

Bore size [mm]	Kit no.	Contents
32	CQ2B32-PS	Set of nos. ⑪, ⑫, ⑬
40	CQ2B40-PS	
50	CQ2B50-PS	
63	CQ2B63-PS	
80	CQ2B80-PS	
100	CQ2B100-PS	

∗ Seal kit includes ⑪, ⑫, ⑬. Order the seal kit based on each bore size.
∗ The seal kit does not include a grease pack. Order it separately.
Grease pack part no.: GR-S-010 (10 g)

Bore Size

ø32 to ø100 With/Without Auto Switch Magnet

Through-hole: C□Q2BS

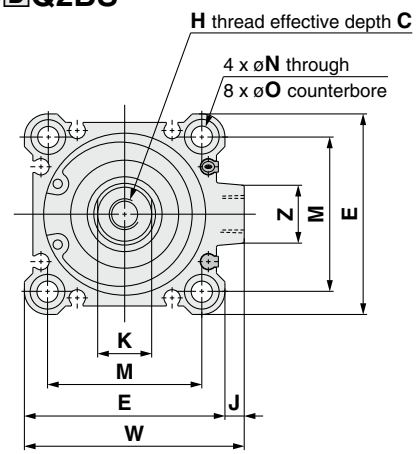

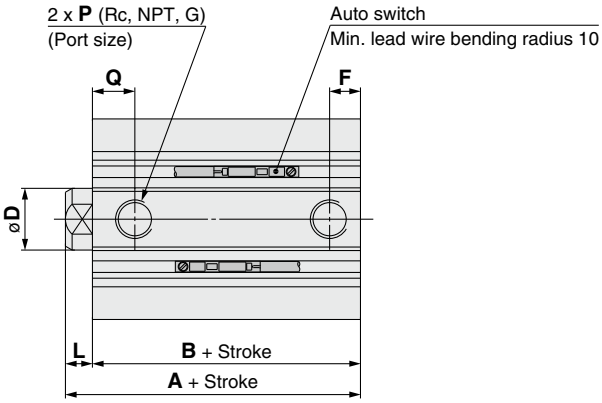

[mm]

Bore size [mm]	Stroke range [mm]	Without auto switch magnet A	Without auto switch magnet B	With auto switch magnet A	With auto switch magnet B	C	D	E	F	H	J	K	L	M	N	O	P	Q	W	Z
32	5 to 50	40	33	50	43	13	16	45	7.5	M8 x 1.25	4.5	14	7	34	5.5	9 depth 7	1/8	10	49.5	14
	75, 100	50	43																	
40	5 to 50	46.5	39.5	56.5	49.5	13	16	52	7.5	M8 x 1.25	5	14	7	40	5.5	9 depth 7	1/8	12.5	57	15
	75, 100	56.5	49.5																	
50	10 to 50	48.5	40.5	58.5	50.5	15	20	64	10.5	M10 x 1.5	7	17	8	50	6.6	11 depth 8	1/4	10.5	71	19
	75, 100	58.5	50.5																	
63	10 to 50	54	46	64	56	15	20	77	10.5	M10 x 1.5	7	17	8	60	9	14 depth 10.5	1/4	15	84	19
	75, 100	64	56																	
80	10 to 50	63.5	53.5	73.5	63.5	21	25	98	12.5	M16 x 2.0	6	22	10	77	11	17.5 depth 13.5	3/8	16	104	25
	75, 100	73.5	63.5																	
100	10 to 50	75	63	85	73	27	30	117	13	M20 x 2.5	6.5	27	12	94	11	17.5 depth 13.5	3/8	23	123.5	25
	75, 100	85	73																	

∗ For details on the rod end nut and accessory brackets ⇨ p. 34 to 36

∗ For the auto switch proper mounting position and mounting height ⇨ p. 149 to 156

Both ends tapped

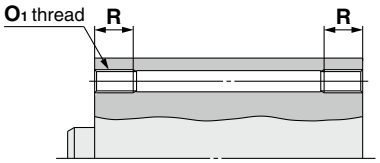

[mm]

Bore size [mm]	O_1	R
32	M6 x 1.0	10
40	M6 x 1.0	10
50	M8 x 1.25	14
63	M10 x 1.5	18
80	M12 x 1.75	22
100	M12 x 1.75	22

Rod end male thread

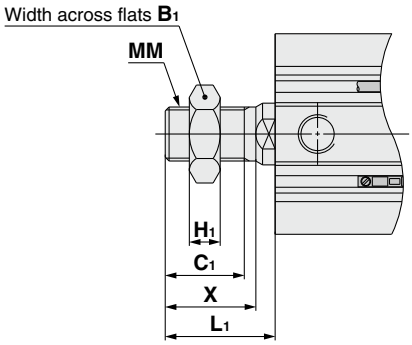

[mm]

Bore size [mm]	B_1	C_1	H_1	L_1	MM	X
32	22	20.5	8	28.5	M14 x 1.5	23.5
40	22	20.5	8	28.5	M14 x 1.5	23.5
50	27	26	11	33.5	M18 x 1.5	28.5
63	27	26	11	33.5	M18 x 1.5	28.5
80	32	32.5	13	43.5	M22 x 1.5	35.5
100	41	32.5	16	43.5	M26 x 1.5	35.5

The dimensions with boss on head end are equivalent to those of the standard type, double acting, single rod. ⇨ p. 27, 28

Dimensions of Each Mounting Bracket

The dimensions of each mounting bracket are the same as those of the standard type, double acting, single rod (except the configuration of the piston rod). Refer to pages 29 to 33.

Compact Cylinder: Long Stroke
Double Acting, Single Rod

CQ2 Series

ø32, ø40, ø50, ø63, ø80, ø100

How to Order

Without auto switch CQ2 A □ 32 □ – 200 D C □ Z – □

With auto switch CDQ2 A □ 32 □ – 200 D C □ Z – M9BW □ – □

With auto switch magnet

❶ ❷ ❸ ❹ ❺ ❻ ❼ ❽ ❾ ❿ ⓫ ⓬

❶ Mounting

A	Both ends tapped
L	Foot
LC	Compact foot
F	Rod flange
G	Head flange
D	Double clevis

∗ Mounting brackets are shipped together with the product but do not come assembled.

❷ Type

Nil	Pneumatic
H	Air-hydro

❸ Bore size

32	32 mm
40	40 mm
50	50 mm
63	63 mm
80	80 mm
100	100 mm

❹ Port thread type

Nil	Rc
TN	NPT
TF	G
F	Built-in One-touch fittings∗1

∗1 The bore sizes available with One-touch fittings are ø32 to ø63. However, they cannot be selected for the air-hydro type.
∗ "TF" is not selectable for the air-hydro type.

❺ Cylinder stroke

(For details on the minimum stroke for auto switch mounting ⇨ p. 157) [mm]

Bore size	Standard stroke
32, 40, 50 63, 80, 100	125, 150, 175 200, 250, 300

∗ For the manufacturing of intermediate strokes ⇨ p. 81

❻ Action

D	Double acting

❼ Cushion

Nil	Without rubber bumper
C	With rubber bumper

∗ Pneumatic type: With rubber bumper only
Air-hydro type: Without rubber bumper only

❽ Body option

Nil	Rod end female thread
M	Rod end male thread

❾ Auto switch mounting groove

Z	4 surfaces

❿ Auto switch

Nil	Without auto switch

∗ For applicable auto switches, refer to the table below.

⓫ Number of auto switches

Nil	2
S	1
n	n

⓬ Made to order common specifications

For details ⇨ p. 81

Cylinder Model with Auto Switch Magnet

If a cylinder with an auto switch magnet and without an auto switch is required, there is no need to enter the symbol for the auto switch.
(Example) CDQ2L40-200DCZ

For details on **auto switch mounting** ⇨ p. 149 to 165

- Auto Switch Proper Mounting Position (Detection at stroke end) and Mounting Height
- Minimum Stroke for Auto Switch Mounting
- Operating Range
- Auto Switch Mounting Brackets/Part Nos.

Applicable Auto Switches / Refer to the **Web Catalog** for further information on auto switches.

Type	Special function	Electrical entry	Indicator light	Wiring (Output)	Load voltage DC		Load voltage AC	Auto switch model Perpendicular	Auto switch model In-line	Lead wire length [m] 0.5 (Nil)	1 (M)	3 (L)	5 (Z)	None (N)	Pre-wired connector	Applicable load	
Solid state auto switch	—	Grommet	Yes	3-wire (NPN)	24 V	5 V, 12 V	—	M9NV	M9N	●	●	●	○	—	○	IC circuit	Relay, PLC
				3-wire (PNP)				M9PV	M9P	●	●	●	○	—	○		
				2-wire		12 V		M9BV	M9B	●	●	●	○	—	○	—	
	Diagnostic indication (2-color indicator)			3-wire (NPN)		5 V, 12 V		M9NWV	M9NW	●	●	●	○	—	○	IC circuit	
				3-wire (PNP)				M9PWV	M9PW	●	●	●	○	—	○		
				2-wire		12 V		M9BWV	M9BW	●	●	●	○	—	○	—	
	Water resistant (2-color indicator)			3-wire (NPN)		5 V, 12 V		M9NAV∗1	M9NA∗1	○	○	●	○	—	○	IC circuit	
				3-wire (PNP)				M9PAV∗1	M9PA∗1	○	○	●	○	—	○		
				2-wire		12 V		M9BAV∗1	M9BA∗1	○	○	●	○	—	○	—	
	Magnetic field resistant (2-color indicator)			2-wire (Non-polar)		—		—	P3DWA	●	—	●	●	—	○		
Reed auto switch	—	Grommet	Yes	3-wire (NPN equivalent)	—	5 V	—	A96V	A96	●	●	●	●	—	○	IC circuit	—
				2-wire	24 V	12 V	100 V	A93V	A93	●	●	●	●	—	○∗2	—	Relay, PLC
			No			5 V, 12 V	100 V or less	A90V	A90	●	●	●	●	—	○∗2	IC circuit	

∗1 Water-resistant type auto switches can be mounted on the above models, but SMC cannot guarantee water resistance. Please contact SMC regarding water-resistant types with the above model numbers.
∗2 The load voltage used is 24 VDC.

∗ Lead wire length symbols: 0.5 m ····· Nil (Example) M9NW
1 m ····· M (Example) M9NWM
3 m ····· L (Example) M9NWL
5 m ····· Z (Example) M9NWZ

∗ Auto switches marked with a "○" are produced upon receipt of order.

∗ There are applicable auto switches other than those listed above. For details ⇨ p. 165

Symbol

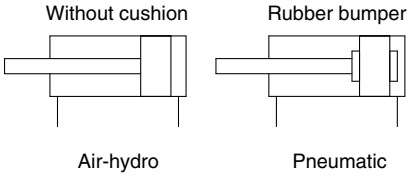

Made to Order Common Specifications (For details ⇨ p. 167 to 196)

Symbol	Specifications
-XA□	Change of rod end shape
-XB10	Intermediate stroke (Exclusive body type)
-XC4	With heavy duty scraper
-XC6	Piston rod/Retaining ring/Rod end nut material: Stainless steel
-XC26	With split pins for double clevis pin/ double knuckle joint pin and flat washers
-XC26□	Double clevis width/Double knuckle width 12.5 mm, 16.5 mm, or 19.5 mm: With double clevis and double knuckle joint
-XC27	Double clevis pin/Double knuckle joint pin material: Stainless steel 304
-XC35	With coil scraper
-XC36	With boss on rod end*2
-XC85	Grease for food processing equipment
-XC88	Spatter-resistant coil scraper, Lube-retainer, Grease for welding (Piston rod: Stainless steel 304)
-XC89	Spatter-resistant coil scraper, Lube-retainer, Grease for welding (Piston rod: S45C)
-X271	Fluororubber seals*1

*1 Excludes the air-hydro type
*2 The standard model can be used for the type with boss on the rod end (-XC36).

* Stainless steel accessories are also available. For details ⇨ p. 34

⚠ Precautions

Refer to page 197 before handling the products.

Specifications

Pneumatic type

Bore size [mm]	32	40	50	63	80	100
Action	Double acting, Single rod					
Fluid	Air					
Proof pressure	1.5 MPa					
Maximum operating pressure	1.0 MPa					
Minimum operating pressure	0.05 MPa					
Ambient and fluid temperatures	Without auto switch magnet: –10 to 70°C With auto switch magnet: –10 to 60°C (No freezing)					
Lubrication	Not required (Non-lube)					
Piston speed	50 to 500 mm/s					
Cushion	With rubber bumper					
Allowable kinetic energy [J]	0.29	0.52	0.91	1.54	2.71	4.54
Stroke length tolerance	$^{+1.4}_{0}$ mm*1					

*1 Stroke length tolerance does not include the amount of bumper change.

Air-hydro type

Bore size [mm]	32	40	50	63	80	100
Action	Double acting, Single rod					
Fluid	Turbine oil*1					
Proof pressure	1.5 MPa					
Maximum operating pressure	1.0 MPa					
Minimum operating pressure	0.18 MPa	0.1 MPa				
Ambient and fluid temperatures	5 to 60°C					
Piston speed	5 to 50 mm/s					
Cushion	None					
Stroke length tolerance	$^{+1.4}_{0}$ mm*2					

*1 Refer to Actuator Precautions 5 (**Web Catalog**).
*2 The air-hydro type has no bumper.

Manufacturing of Intermediate Strokes (Excludes the air-hydro type)

Type	A spacer is installed in the standard stroke body.	Exclusive body (-XB10)
Part no.	Refer to "How to Order" for the standard model number. (⇨ p. 80)	Suffix "-XB10" to the end of standard model number. (⇨ p. 80)
Description	Strokes in 1 mm increments are available by installing a spacer in the standard stroke cylinder.	Strokes in 1 mm increments are available by using an exclusive body with the specified stroke.
Stroke range	101 to 299	101 to 299
Example	Part no.: CQ2A50-166DCZ CQ2A50-175DCZ with 9 mm width spacer inside The B dimension is 230.5 mm.	Part no.: CQ2A50-166DCZ-XB10 Makes 166 mm stroke tube. The B dimension is 221.5 mm.

Mounting Bracket Part Nos.

Bore size [mm]	Foot*1	Compact foot*1	Flange	Double clevis	Double clevis pivot bracket
32	CQ-L032	CQ-LC032	CQ-F032	CQ-D032	CQ-C032
40	CQ-L040	CQ-LC040	CQ-F040	CQ-D040	CQ-C040
50	CQ-L050	CQ-LC050	CQ-F050	CQ-D050	CQ-C050
63	CQ-L063	CQ-LC063	CQ-F063	CQ-D063	CQ-C063
80	CQ-L080	CQ-LC080	CQ-F080	CQ-D080	CQ-C080
100	CQ-L100	CQ-LC100	CQ-F100	CQ-D100	CQ-C100

*1 When ordering foot and compact foot brackets, order 2 pieces per cylinder.
* Parts included with each type of bracket are as follows.
Foot, Compact foot, Flange: Body mounting bolts, Double clevis: Clevis pin, Type C retaining rings for axis, Body mounting bolts
* For details on accessory brackets (Options) ⇨ p. 29 to 36
* Foot, compact foot, flange brackets, etc., cannot be retrofitted for through-hole mounting (B).

Dimensions of Each Mounting Bracket

The dimensions of each mounting bracket are the same as those of the standard type, double acting, single rod (except the configuration of the piston rod). Refer to pages 29 to 33.

Allowable Lateral Load at Rod End

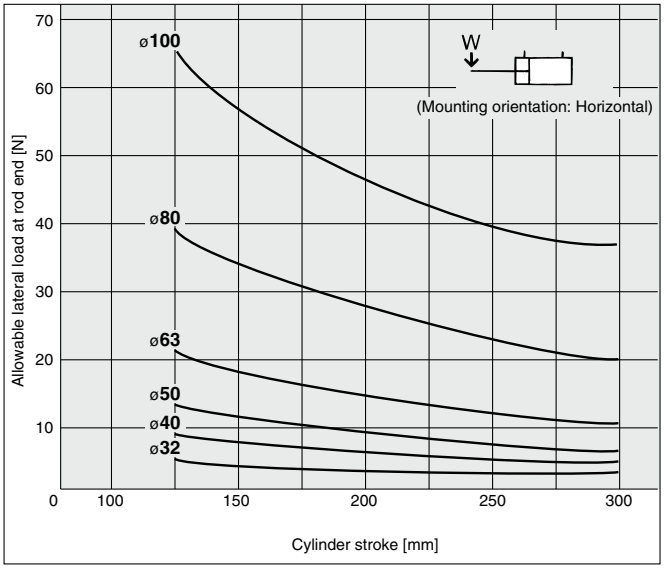

Theoretical Output

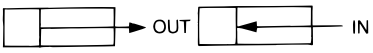

[N]

Bore size [mm]	Operating direction	Operating pressure [MPa]		
		0.3	0.5	0.7
32	IN	181	302	422
	OUT	241	402	563
40	IN	317	528	739
	OUT	377	628	880
50	IN	495	825	1155
	OUT	589	982	1374
63	IN	841	1402	1962
	OUT	935	1559	2182
80	IN	1361	2268	3175
	OUT	1508	2513	3519
100	IN	2144	3574	5003
	OUT	2356	3927	5498

Weight

Without Auto Switch Magnet

[g]

Bore size [mm]	Cylinder stroke [mm]					
	125	150	175	200	250	300
32	708	817	918	1017	1215	1415
40	888	997	1107	1217	1438	1657
50	1352	1517	1682	1841	2177	2507
63	1706	1900	2095	2292	2676	3065
80	2832	3130	3429	3725	4324	4921
100	4540	4906	5270	5634	6367	7096

With Auto Switch Magnet

[g]

Bore size [mm]	Cylinder stroke [mm]					
	125	150	175	200	250	300
32	726	826	927	1026	1224	1424
40	902	1012	1121	1231	1451	1671
50	1367	1532	1697	1856	2192	2522
63	1730	1924	2119	2316	2700	3089
80	2856	3154	3453	3749	4348	4945
100	4578	4944	5308	5672	6405	7134

Additional Weight

[g]

Bore size [mm]		32	40	50	63	80	100
Rod end male thread	Male thread	26	27	53	53	120	175
	Nut	17	17	32	32	49	116
Foot (Including mounting bolts)		104	122	194	272	550	912
Compact foot (Including mounting bolts)		79	93	148	210	454	707
Rod flange (Including mounting bolts)		165	198	348	534	1017	1309
Head flange (Including mounting bolts)		165	198	348	534	1017	1309
Double clevis (Including pin, retaining rings, bolts)		151	196	393	554	1109	1887

Calculation: (Example) **CQ2D32-200DCMZ**
- Basic weight: CQ2A32-200DCZ ····· 1017 g
- Additional weight: Rod end male thread ····· 43 g
  Double clevis ····· 151 g
  1211 g

Add each weight of auto switches when auto switches are mounted.

Construction

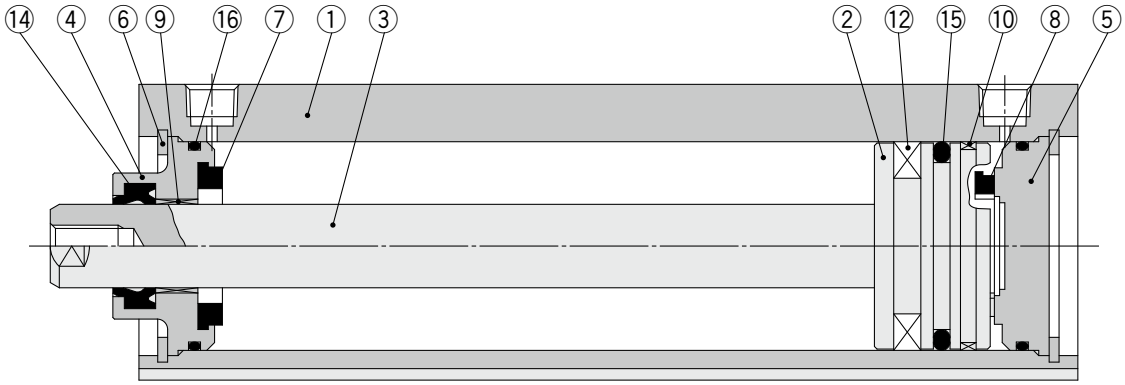

Rod end male thread

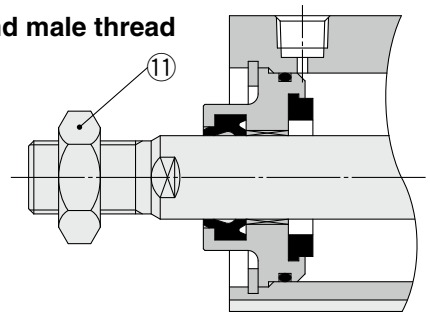

Built-in One-touch fittings

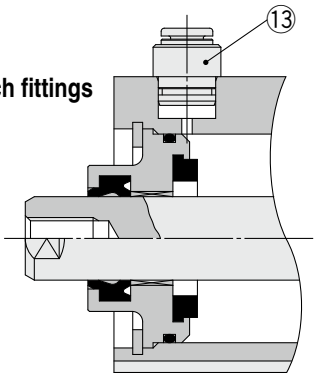

Component Parts

No.	Description	Material	Note
1	**Cylinder tube**	Aluminum alloy	Hard anodized
2	**Piston**	Aluminum alloy	
3	**Piston rod**	Carbon steel	Hard chrome plating
4	**Collar**	Aluminum alloy	Anodized
5	**Bottom plate**	Aluminum alloy	Anodized
6	**Retaining ring**	Carbon tool steel	Phosphate coated
7	**Bumper A**	Urethane	Pneumatic type only
8	**Bumper B**	Urethane	Pneumatic type only
9	**Bushing**	Bearing alloy	
10	**Wear ring**	Resin	
11	**Rod end nut**	Carbon steel	Zinc chromated
12	**Magnet**	—	For CDQ2A□ only
13	**One-touch fitting**	—	ø32 to ø63
14	**Rod seal**	NBR	
15	**Piston seal**	NBR	
16	**Tube gasket**	NBR	

Replacement Parts/Seal Kit
Pneumatic Type

Bore size [mm]	Kit no.	Contents
32	CQ2A32-L-PS	Set of nos. ⑭, ⑮, ⑯
40	CQ2A40-L-PS	
50	CQ2A50-L-PS	
63	CQ2A63-L-PS	
80	CQ2A80-L-PS	
100	CQ2A100-L-PS	

∗ Seal kit includes ⑭, ⑮, ⑯. Order the seal kit based on each bore size.
∗ The seal kit does not include a grease pack. Order it separately.
Grease pack part no.: GR-S-010 (10 g)

Air-hydro Type

Bore size [mm]	Kit no.	Contents
32	CQ2AH32-L-PS	Set of nos. ⑭, ⑮, ⑯
40	CQ2AH40-L-PS	
50	CQ2AH50-L-PS	
63	CQ2AH63-L-PS	
80	CQ2AH80-L-PS	
100	CQ2AH100-L-PS	

∗ Seal kit includes ⑭, ⑮, ⑯. Order the seal kit based on each bore size.
∗ The seal kit does not include a grease pack. Order it separately.
Grease pack part no.: GR-S-010 (10 g)

Bore Size

ø32 to ø100 With/Without Auto Switch Magnet

The dimensions are the same with or without an auto switch magnet.

Both ends tapped: CⒹQ2A

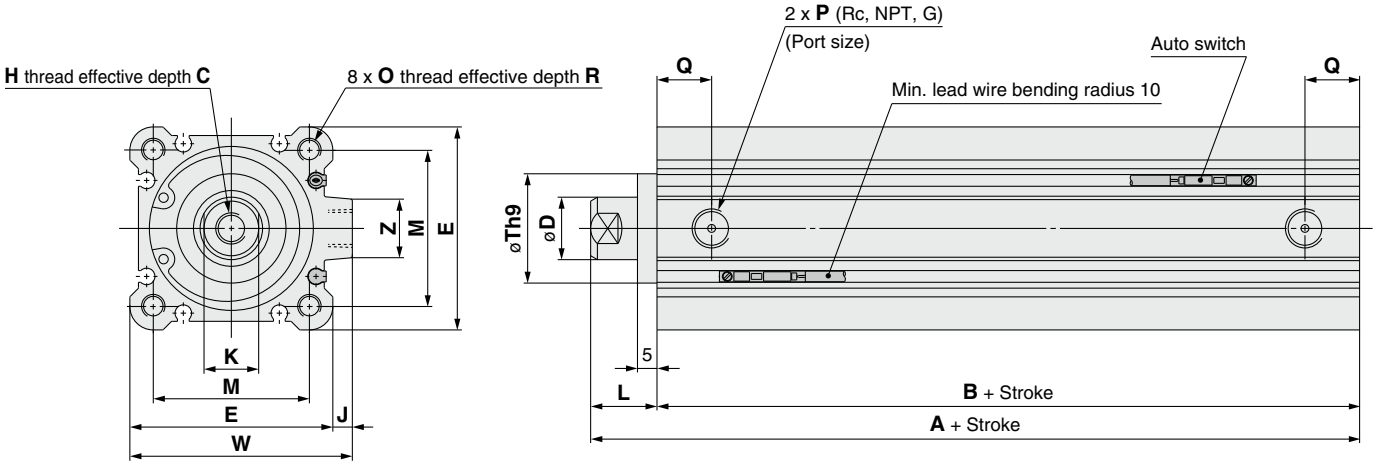

[mm]

Bore size [mm]	Stroke range [mm]	A	B	C	D	E	H	J	K	L	M	O	P	Q	R	Th9	W	Z
32	125, 150, 175, 200, 250, 300	62.5	45.5	13	16	45	M8 x 1.25	4.5	14	17	34	M6 x 1.0	1/8	10	10	$22^{0}_{-0.052}$	49.5	14
40		72	55	13	16	52	M8 x 1.25	5	14	17	40	M6 x 1.0	1/8	12.5	10	$28^{0}_{-0.052}$	57	15
50		73.5	55.5	15	20	64	M10 x 1.5	7	17	18	50	M8 x 1.25	1/4	14	14	$35^{0}_{-0.062}$	71	19
63		75	57	15	20	77	M10 x 1.5	7	17	18	60	M10 x 1.5	1/4	16.5	18	$35^{0}_{-0.062}$	84	19
80		86	66	21	25	98	M16 x 2.0	6	22	20	77	M12 x 1.75	3/8	19	22	$43^{0}_{-0.062}$	104	25
100		97.5	75.5	27	30	117	M20 x 2.5	6.5	27	22	94	M12 x 1.75	3/8	23	22	$59^{0}_{-0.074}$	123.5	25

∗ For details on the rod end nut and accessory brackets ⇨ p. 34 to 36
∗ For calculation on the longitudinal dimension of intermediate strokes ⇨ p. 81
∗ For the auto switch proper mounting position and mounting height ⇨ p. 149 to 156

Rod end male thread

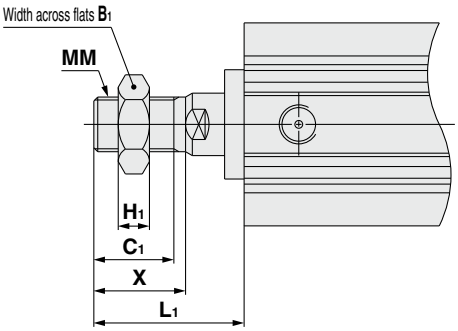

[mm]

Bore size [mm]	B_1	C_1	H_1	L_1	MM	X
32	22	20.5	8	38.5	M14 x 1.5	23.5
40	22	20.5	8	38.5	M14 x 1.5	23.5
50	27	26	11	43.5	M18 x 1.5	28.5
63	27	26	11	43.5	M18 x 1.5	28.5
80	32	32.5	13	53.5	M22 x 1.5	35.5
100	41	32.5	16	53.5	M26 x 1.5	35.5

The dimensions with built-in One-touch fittings are equivalent to those of the standard type, double acting, single rod. ⇨ p. 27, 28

Dimensions of Each Mounting Bracket

The dimensions of each mounting bracket are the same as those of the standard type, double acting, single rod (except the configuration of the piston rod). Refer to pages 29 to 33.

Compact Cylinder: Non-rotating Rod
Double Acting, Single Rod
CQ2K Series
ø12, ø16, ø20, ø25, ø32, ø40, ø50, ø63

How to Order

Without auto switch ø12 to ø25

CQ2K B 20 – 30 D

Without auto switch ø32 to ø63

CQ2K B 32 – 30 D Z –

With auto switch

CDQ2K B 32 – 30 D Z – M9BW –

❶ ❷ ❸ ❹ ❺ ❻ ❼ ❽ ❾ ❿

With auto switch magnet
The overall length of the cylinder with an auto switch magnet is longer than that of the cylinder without an auto switch magnet by the length of the built-in magnet. For details, refer to the dimensions of each size.

Non-rotating rod

❶ Mounting

B	Through-hole	ø12 to ø63
A	Both ends tapped	ø40, ø50, ø63
L	Foot	
LC	Compact foot	
F	Rod flange	
G	Head flange	
D	Double clevis	

∗ Mounting brackets are shipped together with the product but do not come assembled.
∗ A through-hole type mounting bolt is available as an option. For details:
Without auto switch magnet ⇨ p. 89
With auto switch magnet ⇨ p. 90
∗ For cylinders with mounting options "L," "LC," or "F," the cylinder rod protrusion dimensions (Dimensions L and L_1) vary from the standard cylinder. When only ordering the cylinder, order the rod end length increased by 10 mm (-XC2) cylinder.
For details ⇨ p. 178

❷ Bore size

12∗1	12 mm
16	16 mm
20	20 mm
25	25 mm
32	32 mm
40	40 mm
50	50 mm
63	63 mm

∗1 When ø12 with auto switch magnet is required, the body option should be with rubber bumper (C).
Example) CDQ2KB12-30DCZ

❸ Port thread type

Nil	M thread	ø12 to ø25
	Rc	ø32 to ø63
TN	NPT	
TF	G	
F	Built-in One-touch fittings∗1	

∗1 The bore sizes available with One-touch fittings are ø32 to ø63.
∗ For cylinders without an auto switch magnet, M threads are compatible only with ø32-5 mm stroke.

❹ Cylinder stroke

(For details on the minimum stroke for auto switch mounting ⇨ p. 157) [mm]

Bore size	Standard stroke
12, 16	5, 10, 15, 20, 25, 30
20, 25	5, 10, 15, 20, 25, 30, 35 40, 45, 50
32, 40	5, 10, 15, 20, 25, 30, 35 40, 45, 50, 75, 100
50, 63	10, 15, 20, 25, 30, 35, 40 45, 50, 75, 100

∗ For the manufacturing of intermediate strokes ⇨ p. 87

❺ Action

D	Double acting

❻ Body option

Nil	Rod end female thread
F	With boss on head end
C	With rubber bumper (ø12 with auto switch magnet only)
M	Rod end male thread

∗ Combined body options "FM" can be selected.

❼ Auto switch mounting groove

Z	ø12 to ø25	2 surfaces
	ø32 to ø63	4 surfaces

❽ Auto switch

Nil	Without auto switch

∗ For applicable auto switches, refer to the table below.

❾ Number of auto switches

Nil	2
S	1
n	n

❿ Made to order common specifications

For details ⇨ p. 87

Cylinder Model with Auto Switch Magnet

If a cylinder with an auto switch magnet and without an auto switch is required, there is no need to enter the symbol for the auto switch.
(Example) CDQ2KB32-30DZ

For details on **auto switch mounting** ⇨ p. 149 to 165

- Auto Switch Proper Mounting Position (Detection at stroke end) and Mounting Height
- Minimum Stroke for Auto Switch Mounting
- Operating Range
- Auto Switch Mounting Brackets/Part Nos.

Applicable Auto Switches / Refer to the **Web Catalog** for further information on auto switches.

Type	Special function	Electrical entry	Indicator light	Wiring (Output)	Load voltage DC	Load voltage DC	Load voltage AC	Auto switch model Perpendicular	Auto switch model In-line	Lead wire length [m] 0.5 (Nil)	1 (M)	3 (L)	5 (Z)	None (N)	Pre-wired connector	Applicable load	
Solid state auto switch	——	Grommet	Yes	3-wire (NPN)	24 V	5 V, 12 V	—	M9NV	M9N	●	●	●	○	—	○	IC circuit	Relay, PLC
				3-wire (PNP)				M9PV	M9P	●	●	●	○	—	○		
				2-wire		12 V		M9BV	M9B	●	●	●	○	—	○	—	
	Diagnostic indication (2-color indicator)			3-wire (NPN)		5 V, 12 V		M9NWV	M9NW	●	●	●	○	—	○	IC circuit	
				3-wire (PNP)				M9PWV	M9PW	●	●	●	○	—	○		
				2-wire		12 V		M9BWV	M9BW	●	●	●	○	—	○	—	
	Water resistant (2-color indicator)			3-wire (NPN)		5 V, 12 V		M9NAV∗1	M9NA∗1	○	○	●	○	—	○	IC circuit	
				3-wire (PNP)				M9PAV∗1	M9PA∗1	○	○	●	○	—	○		
				2-wire		12 V		M9BAV∗1	M9BA∗1	○	○	●	○	—	○	—	
	Magnetic field resistant (2-color indicator)			2-wire (Non-polar)		—		—	P3DWA	●	—	●	●	—	○		
Reed auto switch	——	Grommet	Yes	3-wire (NPN equivalent)	—	5 V	—	A96V	A96	●	●	●	●	—	○	IC circuit	—
				2-wire	24 V	12 V	100 V	A93V	A93	●	●	●	●	—	○∗2	—	Relay, PLC
			No			5 V,12 V	100 V or less	A90V	A90	●	●	●	●	—	○∗2	IC circuit	

∗1 Water-resistant type auto switches can be mounted on the models on page 85, but SMC cannot guarantee water resistance. Please contact SMC regarding water-resistant types with the model numbers on page 85.
∗2 The load voltage used is 24 VDC.

∗ Lead wire length symbols: 0.5 m ····· Nil (Example) M9NW
1 m ····· M (Example) M9NWM
3 m ····· L (Example) M9NWL
5 m ····· Z (Example) M9NWZ

∗ Auto switches marked with a "○" are produced upon receipt of order.
∗ The D-P3DWA□ type is only available in sizes ø25 to ø63.

∗ There are applicable auto switches other than those listed above. For details ⇨ p. 165

Symbol

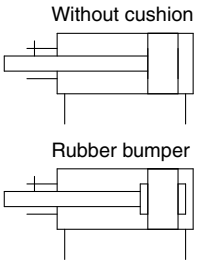

Made to Order Common Specifications
(For details ⇨ p. 167 to 196)

Symbol	Specifications
-XA□	Change of rod end shape
-XB6	Heat-resistant cylinder (–10 to 150°C)
-XB10	Intermediate stroke (Exclusive body type)
-XC2(A)	Rod end length increased by 10 mm (For foot and flange bracket)
-XC8	Adjustable stroke cylinder/Adjustable extension type
-XC9	Adjustable stroke cylinder/Adjustable retraction type
-XC10	Dual stroke cylinder/Double rod type
-XC11	Dual stroke cylinder/Single rod type
-XC26	With split pins for double clevis pin/ double knuckle joint pin and flat washers
-XC27	Double clevis pin/Double knuckle joint pin material: Stainless steel 304
-XC36	With boss on rod end*1
-XC85	Grease for food processing equipment
-X1876	Cylinder tube: With concave boss on head end

*1 The standard model can be used for the type with boss on the rod end (-XC36).

* Stainless steel accessories are also available. For details ⇨ p. 34

Moisture Control Tube
IDK Series

When operating an actuator with a small bore size and a short stroke at a high frequency, dew condensation (water droplets) may occur inside the piping depending on the conditions.
Simply connecting the moisture control tube to the actuator will prevent dew condensation from occurring. For details, refer to the **Web Catalog**.

⚠ Precautions

Refer to pages 197 and 198 before handling the products.

Specifications

Bore size [mm]	12	16	20	25	32	40	50	63
Action	Double acting, Single rod							
Fluid	Air							
Proof pressure	1.5 MPa							
Maximum operating pressure	1.0 MPa							
Minimum operating pressure	0.07 MPa		0.05 MPa					
Ambient and fluid temperatures	Without auto switch magnet: –10 to 70°C With auto switch magnet: –10 to 60°C (No freezing)							
Lubrication	Not required (Non-lube)							
Piston speed	50 to 500 mm/s							
Cushion	Without cushion or With rubber bumper (ø12 only) *1							
Allowable kinetic energy [J]	0.022 0.043*1	0.038	0.055	0.09	0.15	0.26	0.46	0.77
Stroke length tolerance	$^{+1.0}_{0}$ mm*2							
Rod non-rotating accuracy	±2°	±1°			±0.8°			

*1 For cylinders with rubber bumper (ø12 with auto switch magnet only)
*2 Stroke length tolerance does not include the amount of bumper change.
* ø12 with auto switch magnet: With rubber bumper (Standard)

Manufacturing of Intermediate Strokes

Type	A spacer is installed in the standard stroke body.		Exclusive body (-XB10)	
Part no.	Refer to "How to Order" for the standard model number. (⇨ p. 85)		Suffix "-XB10" to the end of standard model number. (⇨ p. 85)	
Description	Strokes in 1 mm increments are available by installing a spacer in the standard stroke cylinder.		Strokes in 1 mm increments are available by using an exclusive body with the specified stroke.	
Stroke range	Bore size	Stroke range	Bore size	Stroke range
	12, 16	1 to 29	—	—
	20, 25	1 to 49	40	6 to 99
	32 to 63	1 to 99	50, 63	11 to 99
Example	Part no.: CQ2KB50-57DZ CQ2KB50-75DZ with 18 mm width spacer inside The B dimension is 115.5 mm.		Part no.: CQ2KB50-57DZ-XB10 Makes 57 mm stroke tube. The B dimension is 97.5 mm.	

Mounting Bracket Part Nos.

Bore size [mm]	Foot*1	Compact foot*1	Flange	Double clevis	Double clevis pivot bracket
40	CQ-L040	CQ-LC040	CQ-F040	CQ-D040	CQ-C040
50	CQ-L050	CQ-LC050	CQ-F050	CQ-D050	CQ-C050
63	CQ-L063	CQ-LC063	CQ-F063	CQ-D063	CQ-C063

*1 When ordering foot and compact foot brackets, order 2 pieces per cylinder.
* Parts included with each type of bracket are as follows.
Foot, Compact foot, Flange: Body mounting bolts
Double clevis: Clevis pin, Type C retaining rings for axis, Body mounting bolts
* For details on accessory brackets (Options) ⇨ p. 29 to 36
* Foot, compact foot, flange brackets, etc., cannot be retrofitted for through-hole mounting (B).

Dimensions of Each Mounting Bracket

The dimensions of each mounting bracket are the same as those of the standard type, double acting, single rod (except the configuration of the piston rod). Refer to pages 29 to 33.

Weight

Without Auto Switch Magnet

[g]

Bore size [mm]	Cylinder stroke [mm]											
	5	10	15	20	25	30	35	40	45	50	75	100
12	60	67	74	81	88	95	—	—	—	—	—	—
16	58	67	76	85	94	103	—	—	—	—	—	—
20	103	117	131	145	159	173	187	201	215	229	—	—
25	137	152	167	182	197	212	227	242	257	272	—	—
32	196	215	234	253	272	291	310	329	347	366	506	601
40	205	226	248	269	291	312	333	355	376	398	570	682
50	—	356	390	424	457	491	525	559	592	626	901	1075
63	—	524	563	602	641	680	720	759	798	837	1173	1375

With Auto Switch Magnet

[g]

Bore size [mm]	Cylinder stroke [mm]											
	5	10	15	20	25	30	35	40	45	50	75	100
12	71	77	83	89	96	102	—	—	—	—	—	—
16	74	82	89	97	105	113	—	—	—	—	—	—
20	119	132	144	156	168	180	192	204	217	229	—	—
25	162	177	192	208	223	238	254	269	284	300	—	—
32	227	247	266	286	306	326	345	365	385	404	504	604
40	240	261	283	305	326	348	369	391	413	434	546	658
50	—	433	466	499	532	565	598	630	663	697	869	1041
63	—	622	660	698	736	774	812	850	888	926	1124	1321

Theoretical Output

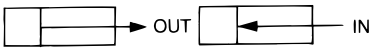

[N]

Bore size [mm]	Operating direction	Operating pressure [MPa]		
		0.3	0.5	0.7
12	IN	25	42	59
	OUT	34	57	79
16	IN	45	75	106
	OUT	60	101	141
20	IN	71	118	165
	OUT	94	157	220
25	IN	113	189	264
	OUT	147	245	344
32	IN	181	302	422
	OUT	241	402	563
40	IN	317	528	739
	OUT	377	628	880
50	IN	495	825	1150
	OUT	589	982	1370
63	IN	841	1400	1960
	OUT	935	1560	2180

Additional Weight

[g]

Bore size [mm]		12	16	20	25	32	40	50	63
Both ends tapped		—	—	—	—	—	6	6	19
Rod end male thread	Male thread	1.5	3	6	12	26	27	53	53
	Nut	1	2	4	8	17	17	32	32
With boss on head end		0.7	1.3	2	3	5	7	13	25
Built-in One-touch fittings		—	—	—	—	12	12	21	21
Foot (Including mounting bolts)		—	—	—	—	—	138	219	297
Compact foot (Including mounting bolts)		—	—	—	—	—	109	172	234
Rod flange (Including mounting bolts)		—	—	—	—	—	213	372	558
Head flange (Including mounting bolts)		—	—	—	—	—	198	348	534
Double clevis (Including pin, retaining rings, bolts)		—	—	—	—	—	196	393	554

Calculation: (Example) **CDQ2KD40-25DMZ**

- Basic weight: CDQ2KB40-25DZ ····· 326 g
- Additional weight: Both ends tapped ····· 6 g
  Rod end male thread ····· 44 g
  Double clevis ····· 196 g
  572 g

Add each weight of auto switches when auto switches are mounted.

Through-hole Type Mounting Bolt for the CQ2K: Without Auto Switch Magnet

Mounting bolt for the through-hole mounting of the CQ2KB is available as an option.
Refer to the following for ordering procedures.
Order the actual number of bolts that will be used.
For models with an auto switch magnet ⇨ p. 90

Example) CQ-M3 x 30L 2 pcs.

Type: Hexagon socket head cap screw
Material: Chromium molybdenum steel
Surface treatment: Zinc chromated

Head end mounting

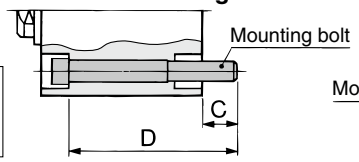

Rod end mounting

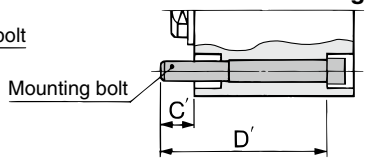

Cylinder model	C	D	Mounting bolt part no.	C'	D'	Mounting bolt part no.
CQ2KB12-5D	6.5	30	CQ-M3 x 30L	6.5	30	CQ-M3 x 30L
-10D		35	x 35L		35	x 35L
-15D		40	x 40L		40	x 40L
-20D		45	x 45L		45	x 45L
-25D		50	x 50L		50	x 50L
-30D		55	x 55L		55	x 55L
CQ2KB16-5D	5	30	CQ-M3 x 30L	5	30	CQ-M3 x 30L
-10D		35	x 35L		35	x 35L
-15D		40	x 40L		40	x 40L
-20D		45	x 45L		45	x 45L
-25D		50	x 50L		50	x 50L
-30D		55	x 55L		55	x 55L
CQ2KB20-5D	8	35	CQ-M5 x 35L	9.5	35	CQ-M5 x 35L
-10D		40	x 40L		40	x 40L
-15D		45	x 45L		45	x 45L
-20D		50	x 50L		50	x 50L
-25D		55	x 55L		55	x 55L
-30D		60	x 60L		60	x 60L
-35D		65	x 65L		65	x 65L
-40D		70	x 70L		70	x 70L
-45D		75	x 75L		75	x 75L
-50D		80	x 80L		80	x 80L
CQ2KB25-5D	10	40	CQ-M5 x 40L	6.5	35	CQ-M5 x 35L
-10D		45	x 45L		40	x 40L
-15D		50	x 50L		45	x 45L
-20D		55	x 55L		50	x 50L
-25D		60	x 60L		55	x 55L
-30D		65	x 65L		60	x 60L
-35D		70	x 70L		65	x 65L
-40D		75	x 75L		70	x 70L
-45D		80	x 80L		75	x 75L
-50D		85	x 85L		80	x 80L
CQ2KB32-5DZ	8.5	40	CQ-M5 x 40L	10	40	CQ-M5 x 40L
-10DZ		45	x 45L		45	x 45L
-15DZ		50	x 50L		50	x 50L
-20DZ		55	x 55L		55	x 55L
-25DZ		60	x 60L		60	x 60L
-30DZ		65	x 65L		65	x 65L
-35DZ		70	x 70L		70	x 70L
-40DZ		75	x 75L		75	x 75L
-45DZ		80	x 80L		80	x 80L
-50DZ		85	x 85L		85	x 85L
-75DZ		120	x 120L		120	x 120L
-100DZ		145	x 145L		145	x 145L

Cylinder model	C, C'	D, D'	Mounting bolt part no.
CQ2KB40-5DZ	7.5	35	CQ-M5 x 35L
-10DZ		40	x 40L
-15DZ		45	x 45L
-20DZ		50	x 50L
-25DZ		55	x 55L
-30DZ		60	x 60L
-35DZ		65	x 65L
-40DZ		70	x 70L
-45DZ		75	x 75L
-50DZ		80	x 80L
-75DZ		115	x 115L
-100DZ		140	x 140L
CQ2KB50-10DZ	12.5	45	CQ-M6 x 45L
-15DZ		50	x 50L
-20DZ		55	x 55L
-25DZ		60	x 60L
-30DZ		65	x 65L
-35DZ		70	x 70L
-40DZ		75	x 75L
-45DZ		80	x 80L
-50DZ		85	x 85L
-75DZ		120	x 120L
-100DZ		145	x 145L
CQ2KB63-10DZ	14.5	50	CQ-M8 x 50L
-15DZ		55	x 55L
-20DZ		60	x 60L
-25DZ		65	x 65L
-30DZ		70	x 70L
-35DZ		75	x 75L
-40DZ		80	x 80L
-45DZ		85	x 85L
-50DZ		90	x 90L
-75DZ		125	x 125L
-100DZ		150	x 150L

Through-hole Type Mounting Bolt for the CDQ2KB: With Auto Switch Magnet

Mounting bolt for the through-hole mounting of the CDQ2KB is available as an option.
Refer to the following for ordering procedures.
Order the actual number of bolts that will be used.
For models without an auto switch magnet ⇨ p. 89

Example) CQ-M3 x 35L 2 pcs.

Type: Hexagon socket head cap screw
Material: Chromium molybdenum steel
Surface treatment: Zinc chromated

Head end mounting

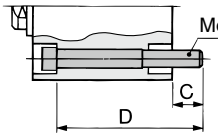

Rod end mounting

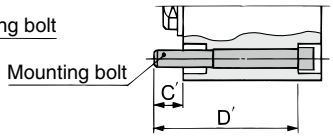

Cylinder model	C	D	Mounting bolt part no.	C'	D'	Mounting bolt part no.
CDQ2KB12-5DCZ	5.5	35	CQ-M3 x 35L	5.5	40	CQ-M3 x 40L
-10DCZ		40	x 40L		45	x 45L
-15DCZ		45	x 45L		50	x 50L
-20DCZ		50	x 50L		55	x 55L
-25DCZ		55	x 55L		60	x 60L
-30DCZ		60	x 60L		65	x 65L
CDQ2KB16-5DZ	8	40	CQ-M3 x 40L	8	45	CQ-M3 x 45L
-10DZ		45	x 45L		50	x 50L
-15DZ		50	x 50L		55	x 55L
-20DZ		55	x 55L		60	x 60L
-25DZ		60	x 60L		65	x 65L
-30DZ		65	x 65L		70	x 70L
CDQ2KB20-5DZ	10.5	40	CQ-M5 x 40L	7.5	45	CQ-M5 x 45L
-10DZ		45	x 45L		50	x 50L
-15DZ		50	x 50L		55	x 55L
-20DZ		55	x 55L		60	x 60L
-25DZ		60	x 60L		65	x 65L
-30DZ		65	x 65L		70	x 70L
-35DZ		70	x 70L		75	x 75L
-40DZ		75	x 75L		80	x 80L
-45DZ		80	x 80L		85	x 85L
-50DZ		85	x 85L		90	x 90L
CDQ2KB25-5DZ	9.5	40	CQ-M5 x 40L	6.5	45	CQ-M5 x 45L
-10DZ		45	x 45L		50	x 50L
-15DZ		50	x 50L		55	x 55L
-20DZ		55	x 55L		60	x 60L
-25DZ		60	x 60L		65	x 65L
-30DZ		65	x 65L		70	x 70L
-35DZ		70	x 70L		75	x 75L
-40DZ		75	x 75L		80	x 80L
-45DZ		80	x 80L		85	x 85L
-50DZ		85	x 85L		90	x 90L
CDQ2KB32-5DZ	8.5	50	CQ-M5 x 50L	10	50	CQ-M5 x 50L
-10DZ		55	x 55L		55	x 55L
-15DZ		60	x 60L		60	x 60L
-20DZ		65	x 65L		65	x 65L
-25DZ		70	x 70L		70	x 70L
-30DZ		75	x 75L		75	x 75L
-35DZ		80	x 80L		80	x 80L
CDQ2KB32-40DZ	8.5	85	CQ-M5 x 85L	10	85	CQ-M5 x 85L
-45DZ		90	x 90L		90	x 90L
-50DZ		95	x 95L		95	x 95L
-75DZ		120	x 120L		120	x 120L
-100DZ		145	x 145L		145	x 145L

Cylinder model	C, C'	D, D'	Mounting bolt part no.
CDQ2KB40-5DZ	7.5	45	CQ-M5 x 45L
-10DZ		50	x 50L
-15DZ		55	x 55L
-20DZ		60	x 60L
-25DZ		65	x 65L
-30DZ		70	x 70L
-35DZ		75	x 75L
-40DZ		80	x 80L
-45DZ		85	x 85L
-50DZ		90	x 90L
-75DZ		115	x 115L
-100DZ		140	x 140L
CDQ2KB50-10DZ	12.5	55	CQ-M6 x 55L
-15DZ		60	x 60L
-20DZ		65	x 65L
-25DZ		70	x 70L
-30DZ		75	x 75L
-35DZ		80	x 80L
-40DZ		85	x 85L
-45DZ		90	x 90L
-50DZ		95	x 95L
-75DZ		120	x 120L
-100DZ		145	x 145L
CDQ2KB63-10DZ	14.5	60	CQ-M8 x 60L
-15DZ		65	x 65L
-20DZ		70	x 70L
-25DZ		75	x 75L
-30DZ		80	x 80L
-35DZ		85	x 85L
-40DZ		90	x 90L
-45DZ		95	x 95L
-50DZ		100	x 100L
-75DZ		125	x 125L
-100DZ		150	x 150L

Construction

Without auto switch magnet

ø12 to ø32

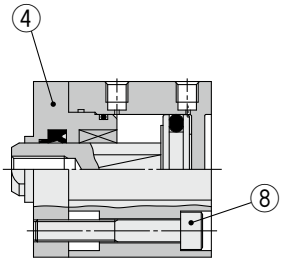

ø40 to ø63

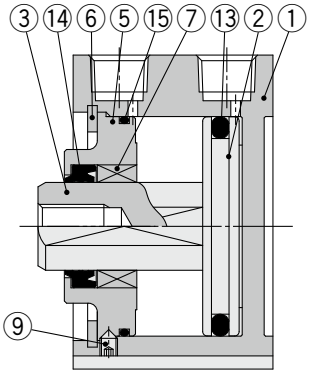

With auto switch magnet

ø12 to ø32

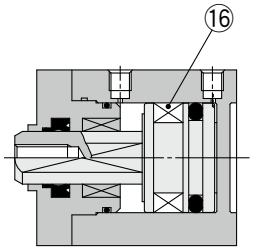

ø40 to ø63

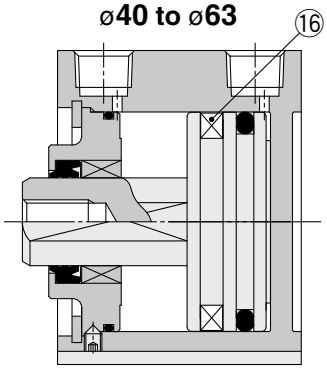

With boss on head end

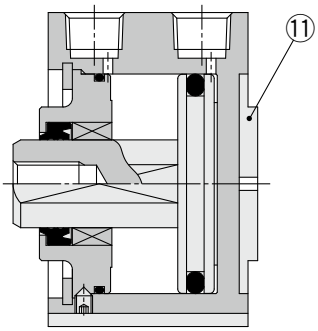

Built-in One-touch fittings

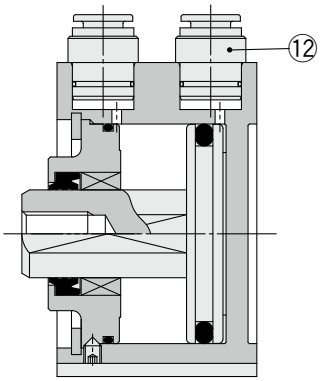

Rod end male thread

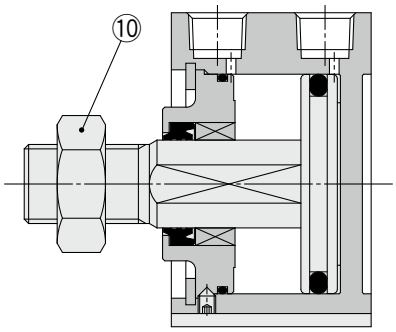

Component Parts

No.	Description	Material	Note
1	**Cylinder tube**	Aluminum alloy	Hard anodized
2	**Piston**	Aluminum alloy	
3	**Piston rod**	Stainless steel	ø12 to ø25
		Carbon steel	ø32 to ø63, Hard chrome plating
4	**Rod cover**	Brass	ø12, Electroless nickel plating
		Aluminum alloy	ø16 to ø32, Anodized
5	**Collar**	Aluminum alloy	ø40 to ø63, Anodized
6	**Retaining ring**	Carbon tool steel	Phosphate coated
7	**Bushing**	Oil-impregnated sintered alloy	ø16 to ø63
8	**Hexagon socket head cap screw**	Alloy steel	ø12 to ø32, Nickel plating
9	**Hexagon socket head set screw**	Alloy steel	ø40 to ø63, Nickel plating
10	**Rod end nut**	Carbon steel	Zinc chromated
11	**Centering location ring**	Aluminum alloy	ø20 to ø63, Anodized
12	**One-touch fitting**	—	ø32 to ø63
13	**Piston seal**	NBR	
14	**Rod seal**	NBR	
15	**Tube gasket**	NBR	
16	**Magnet**	—	

Replacement Parts/Seal Kit

Bore size [mm]	Kit no.	Contents
12	CQ2KB12-PS	Set of nos. ⑬, ⑭, ⑮
16	CQ2KB16-PS	
20	CQ2KB20-PS	
25	CQ2KB25-PS	
32	CQ2KB32-PS	
40	CQ2KB40-PS	
50	CQ2KB50-PS	
63	CQ2KB63-PS	

∗ Seal kit includes ⑬, ⑭, ⑮. Order the seal kit based on each bore size.
∗ The seal kit does not include a grease pack. Order it separately.
Grease pack part no.: GR-S-010 (10 g)

Bore Size

ø12 to ø25 Without Auto Switch Magnet

Through-hole: CQ2KB

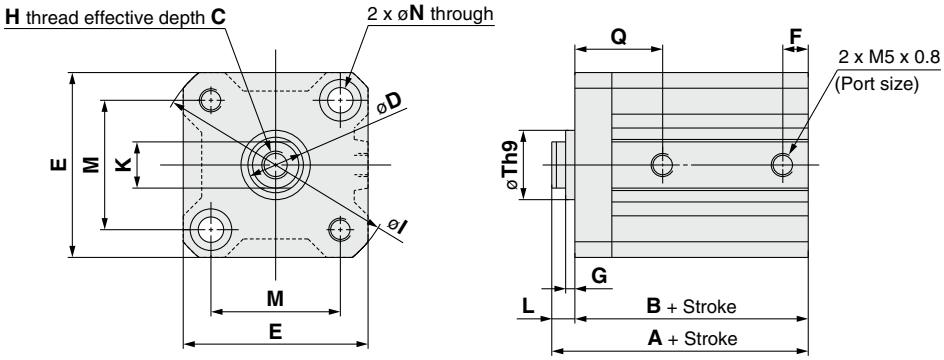

Piston rod cross section

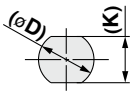

ø12, ø16

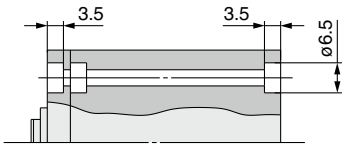

ø20, ø25

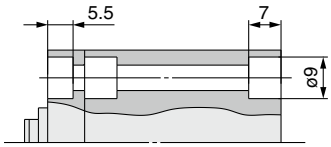

[mm]

Bore size [mm]	Stroke range [mm]	A	B	C	D	E	F	G	H	I	K	L	M	N	Q	Th9
12	5 to 30	25.5	22	6	6	25	5	1.5	M3 x 0.5	32	5.2	3.5	15.5	3.5	12.5	$15^{0}_{-0.043}$
16	5 to 30	27	23.5	8	8	29	5.5	1.5	M4 x 0.7	38	6	3.5	20	3.5	13	$20^{0}_{-0.052}$
20	5 to 50	32	27.5	7	10	36	5.5	2	M5 x 0.8	47	8	4.5	25.5	5.5	16	$13^{0}_{-0.043}$
25	5 to 50	35.5	30.5	12	12	40	5.5	2	M6 x 1.0	52	10	5	28	5.5	17	$15^{0}_{-0.043}$

∗ For details on the rod end nut and accessory brackets ⇨ p. 34 to 36

Rod end male thread

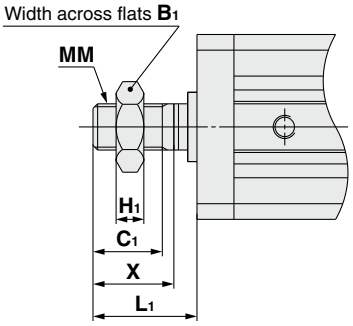

[mm]

Bore size [mm]	B_1	C_1	H_1	L_1	MM	X
12	8	9	4	14	M5 x 0.8	10.5
16	10	10	5	15.5	M6 x 1.0	12
20	13	12	5	18.5	M8 x 1.25	14
25	17	15	6	22.5	M10 x 1.25	17.5

With boss on head end

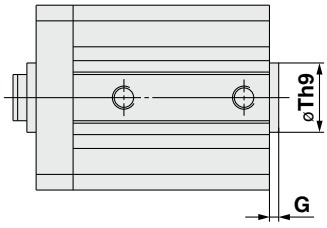

[mm]

Bore size [mm]	G	Th9
12	1.5	$15^{0}_{-0.043}$
16	1.5	$20^{0}_{-0.052}$
20	2	$13^{0}_{-0.043}$
25	2	$15^{0}_{-0.043}$

Bore Size

ø12 to ø25 With Auto Switch Magnet

Through-hole: CDQ2KB

ø12

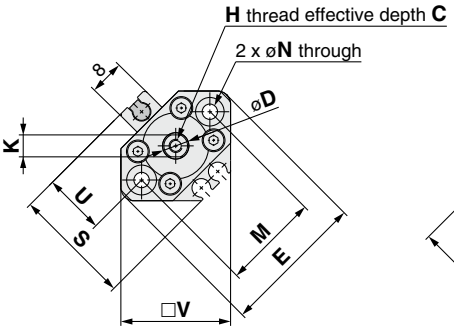

ø16 to ø25

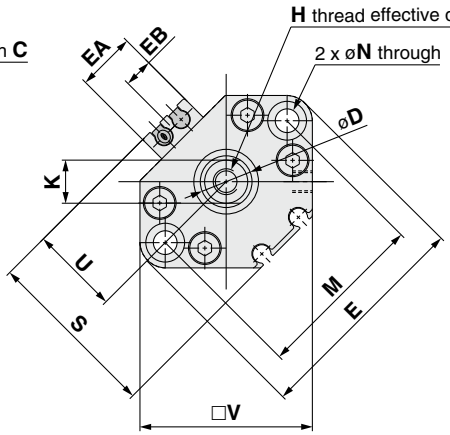

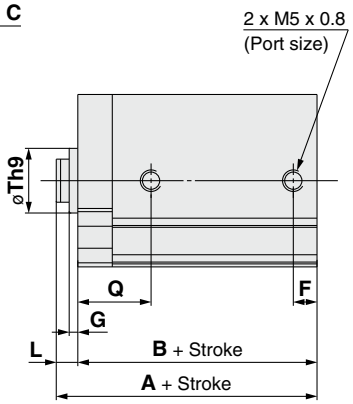

Piston rod cross section

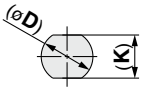

ø12, ø16

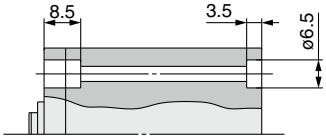

ø20, ø25

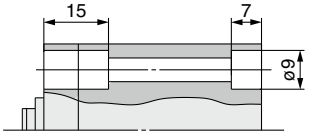

[mm]

Bore size [mm]	Stroke range [mm]	A	B	C	D	E	EA	EB	F	G	H	K	L	M	N	Q	S	Th9	U	V
12	5 to 30	36.5	33	6	6	33	—	—	6.5	1.5	M3 x 0.5	5.2	3.5	22	3.5	16	27.5	$15^{0}_{-0.043}$	14	25
16	5 to 30	39	35.5	8	8	37	13.2	6.6	5.5	1.5	M4 x 0.7	6	3.5	28	3.5	15	29.5	$20^{0}_{-0.052}$	15	29
20	5 to 50	44	39.5	7	10	47	13.6	6.8	5.5	2	M5 x 0.8	8	4.5	36	5.5	16	35.5	$13^{0}_{-0.043}$	18	36
25	5 to 50	45.5	40.5	12	12	52	13.6	6.8	5.5	2	M6 x 1.0	10	5	40	5.5	17	40.5	$15^{0}_{-0.043}$	21	40

∗ For details on the rod end nut and accessory brackets ⇨ p. 34 to 36
∗ For the auto switch proper mounting position and mounting height ⇨ p. 149 to 156

Rod end male thread

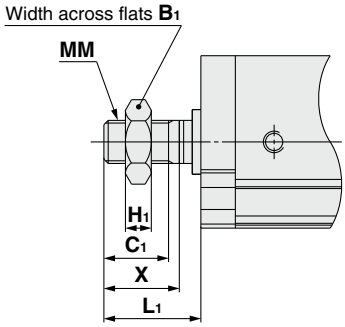

[mm]

Bore size [mm]	B_1	C_1	H_1	L_1	MM	X
12	8	9	4	14	M5 x 0.8	10.5
16	10	10	5	15.5	M6 x 1.0	12
20	13	12	5	18.5	M8 x 1.25	14
25	17	15	6	22.5	M10 x 1.25	17.5

With boss on head end

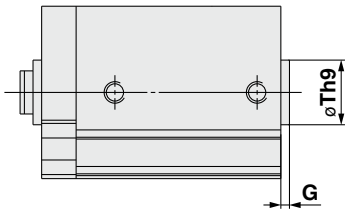

[mm]

Bore size [mm]	G	Th9
12	1.5	$15^{0}_{-0.043}$
16	1.5	$20^{0}_{-0.052}$
20	2	$13^{0}_{-0.043}$
25	2	$15^{0}_{-0.043}$

Bore Size

ø32 With/Without Auto Switch Magnet

Through-hole: CDQ2KB

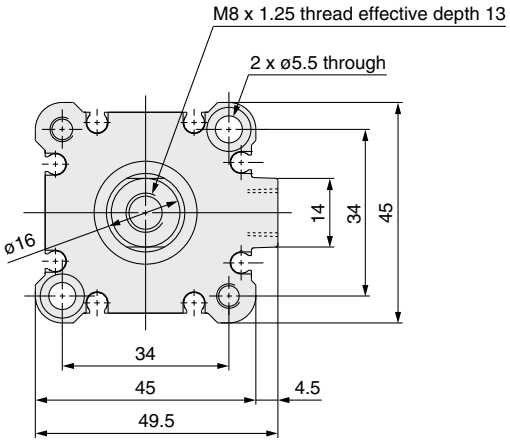

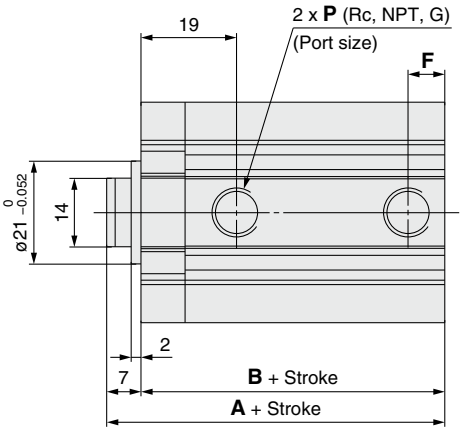

Piston rod cross section

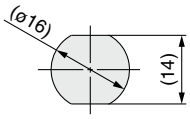

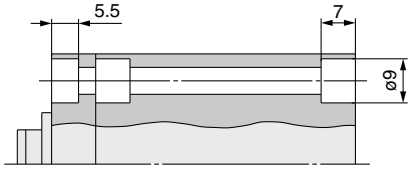

[mm]

Stroke range [mm]	Without auto switch magnet				With auto switch magnet			
	A	B	F	P	A	B	F	P
5	39	32	5.5	M5 x 0.8	49	42	7.5	1/8
10 to 50			7.5	1/8				
75, 100	49	42						

Rod end male thread

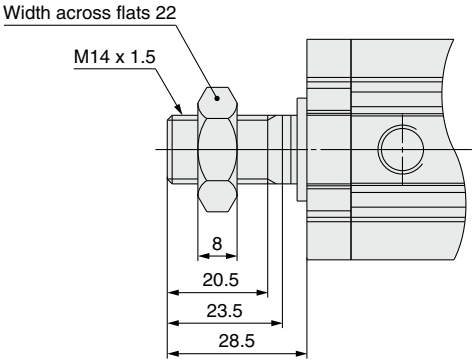

With boss on head end

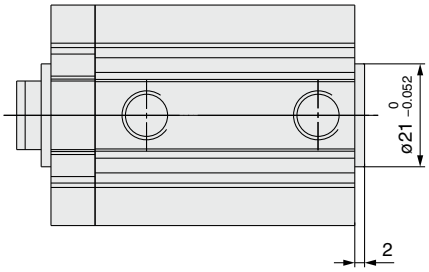

The dimensions with built-in One-touch fittings are equivalent to those of the standard type, double acting, single rod. ⇨ p. 27

Bore Size

ø40 to ø63 With/Without Auto Switch Magnet

Through-hole: CⒹQ2KB

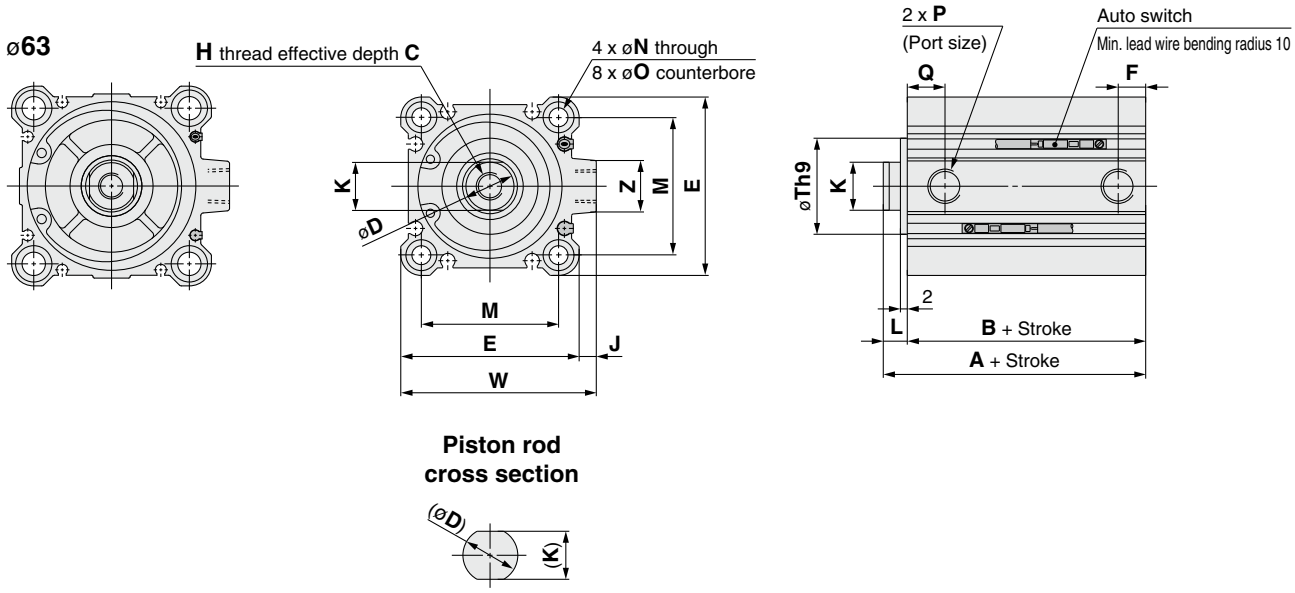

[mm]

Bore size [mm]	Stroke range [mm]	Without auto switch magnet A	Without auto switch magnet B	With auto switch magnet A	With auto switch magnet B	C	D	E	F	H	J	K	L	M	N	O	P	Q	Th9	W	Z
40	5 to 50	36.5	29.5	46.5	39.5	13	16	52	7.5	M8 x 1.25	5	14	7	40	5.5	9 depth 7	1/8	12.5	$28^{0}_{-0.052}$	57	15
	75, 100	46.5	39.5																		
50	10 to 50	38.5	30.5	48.5	40.5	15	20	64	10.5	M10 x 1.5	7	18	8	50	6.6	11 depth 8	1/4	10.5	$35^{0}_{-0.062}$	71	19
	75, 100	48.5	40.5																		
63	10 to 50	44	36	54	46	15	20	77	10.5	M10 x 1.5	7	18	8	60	9	14 depth 10.5	1/4	15	$35^{0}_{-0.062}$	84	19
	75, 100	54	46																		

∗ For details on the rod end nut and accessory brackets ⇨ p. 34 to 36

Both ends tapped

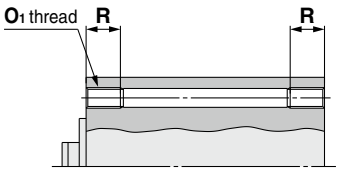

[mm]

Bore size [mm]	O_1	R
40	M6 x 1.0	10
50	M8 x 1.25	14
63	M10 x 1.5	18

With boss on head end

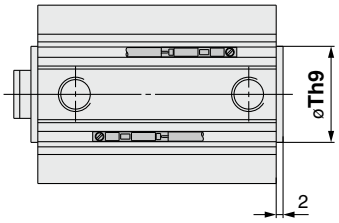

[mm]

Bore size [mm]	Th9
40	$28^{0}_{-0.052}$
50	$35^{0}_{-0.062}$
63	$35^{0}_{-0.062}$

Rod end male thread

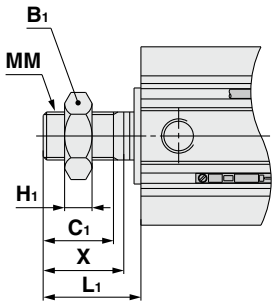

[mm]

Bore size [mm]	B_1	C_1	H_1	L_1	MM	X
40	22	20.5	8	28.5	M14 x 1.5	23.5
50	27	26	11	33.5	M18 x 1.5	28.5
63	27	26	11	33.5	M18 x 1.5	28.5

The dimensions with built-in One-touch fittings are equivalent to those of the standard type, double acting, single rod. ⇨ p. 27, 28

Dimensions of Each Mounting Bracket

The dimensions of each mounting bracket are the same as those of the standard type, double acting, single rod (except the configuration of the piston rod). Refer to pages 29 to 33.

	With End Lock	Axial Piping		Water Resistant		Non-rotating Rod		Long Stroke	Anti-lateral Load	Large Bore Size		Standard		
Made to Order	Double Acting, Single Rod **CBQ2**	Single Acting, Spring Return/Extend **CQP2**	Double Acting, Single Rod **CQP2**	Double Acting, Double Rod **CQ2W-R/V**	Double Acting, Single Rod **CQ2-R/V**	Double Acting, Double Rod **CQ2KW**	Double Acting, Single Rod **CQ2K**	Double Acting, Single Rod **CQ2**	Double Acting, Single Rod **CQ2□S**	Double Acting, Double Rod **CQ2W**	Double Acting, Single Rod **CQ2**	Single Acting, Spring Return/Extend **CQ2**	Double Acting, Double Rod **CQ2W**	Double Acting, Single Rod **CQ2**
Auto Switch														

Compact Cylinder: Non-rotating Rod
Double Acting, Double Rod
CQ2KW Series
ø12, ø16, ø20, ø25, ø32, ø40, ø50, ø63

How to Order

Without auto switch ø12 to ø25

CQ2KW B 20 □ – 30 D □

Without auto switch ø32 to ø63

CQ2KW B 32 □ – 30 D □ Z

With auto switch

CDQ2KW B 32 □ – 30 D □ Z – M9BW □

❶ ❷ ❸ ❹ ❺ ❻ ❼ ❽ ❾

With auto switch magnet
The overall length of the cylinder with an auto switch magnet is longer than that of the cylinder without an auto switch magnet by the length of the built-in magnet. For details, refer to the dimensions of each size.

❶ Mounting

B	Through-hole	ø12 to ø63
A	Both ends tapped	ø40 to ø63
L	Foot	
LC	Compact foot	
F	Flange	

∗ Mounting brackets are shipped together with the product but do not come assembled.
∗ A through-hole type mounting bolt is available as an option. For details:
Without auto switch magnet ⇨ p. 101
With auto switch magnet ⇨ p. 102
∗ For cylinders with mounting options "L," "LC," or "F," the cylinder rod protrusion dimensions (Dimensions L and L_1) vary from the standard cylinder. When only ordering the cylinder, order the rod end length increased by 10 mm (-XC2) cylinder.
For details ⇨ p. 178

❷ Bore size

12	12 mm
16	16 mm
20	20 mm
25	25 mm
32	32 mm
40	40 mm
50	50 mm
63	63 mm

❸ Port thread type

Nil	M thread	ø12 to ø25
	Rc	ø32 to ø63
TN	NPT	
TF	G	
F	Built-in One-touch fittings∗1	

∗1 The bore sizes available with One-touch fittings are ø32 to ø63.
∗ For cylinders without an auto switch magnet, M threads are compatible only with ø32-5 mm stroke.

❹ Cylinder stroke

(For details on the minimum stroke for auto switch mounting ⇨ p. 157) [mm]

Bore size	Standard stroke
12, 16	5, 10, 15, 20, 25, 30
20, 25	5, 10, 15, 20, 25, 30, 35 40, 45, 50
32, 40	5, 10, 15, 20, 25, 30, 35 40, 45, 50, 75, 100
50, 63	10, 15, 20, 25, 30, 35, 40 45, 50, 75, 100

∗ For the manufacturing of intermediate strokes ⇨ p. 99

❺ Action

D	Double acting

❻ Body option

Nil	Rod end female thread
C	With rubber bumper (ø12 with auto switch magnet only)
M	Rod end male thread

❼ Auto switch mounting groove

Z	ø12 to ø25	2 surfaces
	ø32 to ø63	4 surfaces

❽ Auto switch

Nil	Without auto switch

∗ For applicable auto switches, refer to the next page.

❾ Number of auto switches

Nil	2
S	1
n	n

Cylinder Model with Auto Switch Magnet

If a cylinder with an auto switch magnet and without an auto switch is required, there is no need to enter the symbol for the auto switch.
(Example) CDQ2KWB32-30DZ

For details on **auto switch mounting** ⇨ p. 149 to 165

- Auto Switch Proper Mounting Position (Detection at stroke end) and Mounting Height
- Minimum Stroke for Auto Switch Mounting
- Operating Range
- Auto Switch Mounting Brackets/Part Nos.

Applicable Auto Switches / Refer to the **Web Catalog** for further information on auto switches.

Type	Special function	Electrical entry	Indicator light	Wiring (Output)	Load voltage DC		Load voltage AC	Auto switch model Perpendicular	Auto switch model In-line	Lead wire length [m] 0.5 (Nil)	1 (M)	3 (L)	5 (Z)	None (N)	Pre-wired connector	Applicable load	
Solid state auto switch	——	Grommet	Yes	3-wire (NPN)	24 V	5 V, 12 V	—	**M9NV**	**M9N**	●	●	●	○	—	○	IC circuit	Relay, PLC
				3-wire (PNP)				**M9PV**	**M9P**	●	●	●	○	—	○		
				2-wire		12 V		**M9BV**	**M9B**	●	●	●	○	—	○	—	
	Diagnostic indication (2-color indicator)			3-wire (NPN)		5 V, 12 V		**M9NWV**	**M9NW**	●	●	●	○	—	○	IC circuit	
				3-wire (PNP)				**M9PWV**	**M9PW**	●	●	●	○	—	○		
				2-wire		12 V		**M9BWV**	**M9BW**	●	●	●	○	—	○	—	
	Water resistant (2-color indicator)			3-wire (NPN)		5 V, 12 V		**M9NAV**∗1	**M9NA**∗1	○	○	●	○	—	○	IC circuit	
				3-wire (PNP)				**M9PAV**∗1	**M9PA**∗1	○	○	●	○	—	○		
				2-wire		12 V		**M9BAV**∗1	**M9BA**∗1	○	○	●	○	—	○	—	
	Magnetic field resistant (2-color indicator)			2-wire (Non-polar)		—		—	**P3DWA**	●	—	●	●	—	○		
Reed auto switch	——	Grommet	Yes	3-wire (NPN equivalent)	—	5 V	—	**A96V**	**A96**	●	●	●	●	—	○	IC circuit	—
				2-wire	24 V	12 V	100 V	**A93V**	**A93**	●	●	●	●	—	○∗2	—	Relay, PLC
			No			5 V,12 V	100 V or less	**A90V**	**A90**	●	●	●	●	—	○∗2	IC circuit	

∗1 Water-resistant type auto switches can be mounted on the models on page 97, but SMC cannot guarantee water resistance.
Please contact SMC regarding water-resistant types with the model numbers on page 97.
∗2 The load voltage used is 24 VDC.

∗ Lead wire length symbols: 0.5 m ····· Nil (Example) M9NW
1 m ····· M (Example) M9NWM
3 m ····· L (Example) M9NWL
5 m ····· Z (Example) M9NWZ

∗ Auto switches marked with a "○" are produced upon receipt of order.
∗ The D-P3DWA□ type is only available in sizes ø25 to ø63.

∗ There are applicable auto switches other than those listed above. For details ⇨ p. 165

Symbol

Without cushion

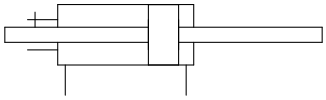

Rubber bumper

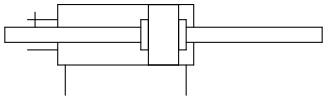

Made to Order Common Specifications (For details ⇨ p. 167 to 196)

Symbol	Specifications
-XA□	Change of rod end shape
-XB6	Heat-resistant cylinder (–10 to 150°C)
-XB10	Intermediate stroke (Exclusive body type)
-XC2(A)	Rod end length increased by 10 mm (For foot and flange bracket)
-XC36	With boss on rod end*1
-XC85	Grease for food processing equipment
-X633	Intermediate stroke for double rod cylinder

*1 The standard model can be used for the type with boss on the rod end (-XC36).
* -X633: Intermediate stroke in 5 mm increments only

* Stainless steel accessories are also available. For details ⇨ p. 34

Specifications

Bore size [mm]	12	16	20	25	32	40	50	63
Action	Double acting, Double rod							
Fluid	Air							
Proof pressure	1.5 MPa							
Maximum operating pressure	1.0 MPa							
Minimum operating pressure	0.07 MPa		0.05 MPa					
Ambient and fluid temperatures	Without auto switch magnet: –10 to 70°C With auto switch magnet: –10 to 60°C (No freezing)							
Lubrication	Not required (Non-lube)							
Piston speed	50 to 500 mm/s							
Cushion	Without cushion or With rubber bumper (ø12 only) *1							
Allowable kinetic energy [J]	0.022 0.043*1	0.038	0.055	0.09	0.15	0.26	0.46	0.77
Stroke length tolerance	$^{+1.0}_{0}$ mm*2							
Rod non-rotating accuracy	±2°	±1°			±0.8°			

*1 For cylinders with rubber bumper (ø12 with auto switch magnet only)
*2 Stroke length tolerance does not include the amount of bumper change.
* ø12 with auto switch magnet: With rubber bumper (Standard)

Manufacturing of Intermediate Strokes

Type	A spacer is installed in the standard stroke body.		A spacer is installed in the standard stroke body. (1 mm increments)		Exclusive body (-XB10)	
Part no.	Refer to "How to Order" for the standard model number. (⇨ p. 97)		Suffix "-X633" (p. 194) to the end of standard model number. (⇨ p. 97)		Suffix "-XB10" to the end of standard model number. (⇨ p. 97)	
Description	Strokes in 5 mm increments are available by installing a spacer in the standard stroke cylinder.		Strokes in 1 mm increments are available by installing a spacer in the standard stroke cylinder.		Strokes in 1 mm increments are available by using an exclusive body with the specified stroke.	
Stroke range	Bore size	Stroke range	Bore size	Stroke range	Bore size	Stroke range
	—	—	12, 16	6 to 29	—	—
			20, 25	6 to 49		
	32 to 63	55 to 95	32, 40	6 to 99	40	6 to 99
			50, 63	11 to 99	50, 63	11 to 99
Example	Part no.: CQ2KWB50-65DZ CQ2KWB50-75DZ with 10 mm width spacer inside The B dimension is 125.5 mm.		Part no.: CQ2KWB50-72DZ-X633 CQ2KW50-75DZ with 3 mm width spacer inside The B dimension is 125.5 mm.		Part no.: CQ2KWB50-65DZ-XB10 Makes 65 mm stroke tube. The B dimension is 115.5 mm.	

Mounting Bracket Part Nos.

Bore size [mm]	Foot*1	Compact foot*1	Flange
40	CQ-L040	CQ-LC040	CQ-F040
50	CQ-L050	CQ-LC050	CQ-F050
63	CQ-L063	CQ-LC063	CQ-F063

*1 When ordering foot and compact foot brackets, order 2 pieces per cylinder.
* Parts included with each type of bracket are as follows.
Foot, Compact foot, Flange: Body mounting bolts
* For details on accessory brackets (Options) ⇨ p. 29 to 36
* Foot, compact foot, flange brackets, etc., cannot be retrofitted for through-hole mounting (B).

Dimensions of Each Mounting Bracket

The dimensions of each mounting bracket are the same as those of the standard type, double acting, double rod (except the configuration of the piston rod). Refer to pages 48 to 50.

Moisture Control Tube
IDK Series

When operating an actuator with a small bore size and a short stroke at a high frequency, dew condensation (water droplets) may occur inside the piping depending on the conditions.
Simply connecting the moisture control tube to the actuator will prevent dew condensation from occurring. For details, refer to the **Web Catalog**.

⚠ Precautions

Refer to pages 197 and 198 before handling the products.

Weight

Without Auto Switch Magnet

[g]

Bore size [mm]	Cylinder stroke [mm]											
	5	10	15	20	25	30	35	40	45	50	75	100
12	62	69	76	83	90	97	—	—	—	—	—	—
16	62	73	84	95	106	117	—	—	—	—	—	—
20	101	116	131	146	161	176	191	206	221	236	—	—
25	138	155	172	189	206	223	240	257	274	291	—	—
32	233	256	279	302	325	348	371	394	417	440	600	715
40	336	365	394	424	453	483	512	541	571	600	806	953
50	—	517	558	600	642	684	725	767	809	850	1142	1351
63	—	742	779	815	851	887	923	959	995	1032	1285	1465

With Auto Switch Magnet

[g]

Bore size [mm]	Cylinder stroke [mm]											
	5	10	15	20	25	30	35	40	45	50	75	100
12	76	83	90	98	105	113	—	—	—	—	—	—
16	89	99	109	118	128	138	—	—	—	—	—	—
20	148	164	179	194	210	225	240	256	271	286	—	—
25	213	228	244	259	275	291	306	322	337	353	—	—
32	259	282	305	328	351	374	397	420	443	466	580	695
40	441	471	500	530	559	588	618	647	677	706	853	1000
50	—	642	684	726	767	809	851	892	934	976	1184	1393
63	—	871	907	943	979	1015	1051	1088	1124	1160	1341	1521

Additional Weight

[g]

Bore size [mm]		12	16	20	25	32	40	50	63
Both ends tapped		—	—	—	—	—	6	6	19
Rod end male thread	Male thread	3	6	12	24	52	54	106	106
	Nut	2	4	8	16	34	34	64	64
Built-in One-touch fittings		—	—	—	—	12	12	21	21
Foot (Including mounting bolts)		—	—	—	—	—	154	243	321
Compact foot (Including mounting bolts)		—	—	—	—	—	124	197	259
Flange (Including mounting bolts)		—	—	—	—	—	214	373	559

Calculation: (Example) **CDQ2KWA40-20DMZ**
- Basic weight: CDQ2KWB40-20DZ ····· 530 g
- Additional weight: Both ends tapped ····· 6 g
  Rod end male thread ····· 88 g
  624 g

Add each weight of auto switches when auto switches are mounted.

Theoretical Output

[N]

Bore size [mm]	Operating pressure [MPa]		
	0.3	0.5	0.7
12	25	42	59
16	45	75	106
20	71	118	165
25	113	189	264
32	181	302	422
40	317	528	739
50	495	825	1150
63	841	1400	1960

Through-hole Type Mounting Bolt for the CQ2KW: Without Auto Switch Magnet

Mounting bolt for the through-hole mounting of the CQ2KWB is available as an option.
Refer to the following for ordering procedures.
Order the actual number of bolts that will be used.
For models with an auto switch magnet ⇨ p. 102

Example) CQ-M3 x 40L 2 pcs.

Type: Hexagon socket head cap screw
Material: Chromium molybdenum steel
Surface treatment: Zinc chromated

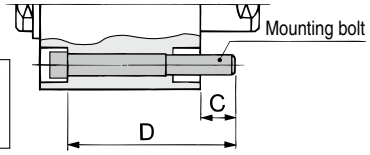

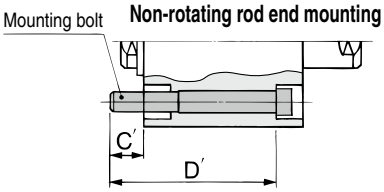

Cylinder model	C	D	Mounting bolt part no.	C'	D'	Mounting bolt part no.
CQ2KWB12-5D	8.3	40	CQ-M3 x 40L	8.3	40	CQ-M3 x 40L
-10D		45	x 45L		45	x 45L
-15D		50	x 50L		50	x 50L
-20D		55	x 55L		55	x 55L
-25D		60	x 60L		60	x 60L
-30D		65	x 65L		65	x 65L
CQ2KWB16-5D	7.5	40	CQ-M3 x 40L	7.5	40	CQ-M3 x 40L
-10D		45	x 45L		45	x 45L
-15D		50	x 50L		50	x 50L
-20D		55	x 55L		55	x 55L
-25D		60	x 60L		60	x 60L
-30D		65	x 65L		65	x 65L
CQ2KWB20-5D	6.5	40	CQ-M5 x 40L	8	40	CQ-M5 x 40L
-10D		45	x 45L		45	x 45L
-15D		50	x 50L		50	x 50L
-20D		55	x 55L		55	x 55L
-25D		60	x 60L		60	x 60L
-30D		65	x 65L		65	x 65L
-35D		70	x 70L		70	x 70L
-40D		75	x 75L		75	x 75L
-45D		80	x 80L		80	x 80L
-50D		85	x 85L		85	x 85L
CQ2KWB25-5D	8.5	45	CQ-M5 x 45L	10	45	CQ-M5 x 45L
-10D		50	x 50L		50	x 50L
-15D		55	x 55L		55	x 55L
-20D		60	x 60L		60	x 60L
-25D		65	x 65L		65	x 65L
-30D		70	x 70L		70	x 70L
-35D		75	x 75L		75	x 75L
-40D		80	x 80L		80	x 80L
-45D		85	x 85L		85	x 85L
-50D		90	x 90L		90	x 90L
CQ2KWB32-5DZ	11	50	CQ-M5 x 50L	7.5	45	CQ-M5 x 45L
-10DZ		55	x 55L		50	x 50L
-15DZ		60	x 60L		55	x 55L
-20DZ		65	x 65L		60	x 60L
-25DZ		70	x 70L		65	x 65L
-30DZ		75	x 75L		70	x 70L
-35DZ		80	x 80L		75	x 75L
-40DZ		85	x 85L		80	x 80L
-45DZ		90	x 90L		85	x 85L
-50DZ		95	x 95L		90	x 90L
-75DZ		130	x 130L		125	x 125L
-100DZ		155	x 155L		150	x 150L

Cylinder model	C, C'	D, D'	Mounting bolt part no.
CQ2KWB40-5DZ	7	45	CQ-M5 x 45L
-10DZ		50	x 50L
-15DZ		55	x 55L
-20DZ		60	x 60L
-25DZ		65	x 65L
-30DZ		70	x 70L
-35DZ		75	x 75L
-40DZ		80	x 80L
-45DZ		85	x 85L
-50DZ		90	x 90L
-75DZ		125	x 125L
-100DZ		150	x 150L
CQ2KWB50-10DZ	12.5	55	CQ-M6 x 55L
-15DZ		60	x 60L
-20DZ		65	x 65L
-25DZ		70	x 70L
-30DZ		75	x 75L
-35DZ		80	x 80L
-40DZ		85	x 85L
-45DZ		90	x 90L
-50DZ		95	x 95L
-75DZ		130	x 130L
-100DZ		155	x 155L
CQ2KWB63-10DZ	13.5	55	CQ-M8 x 55L
-15DZ		60	x 60L
-20DZ		65	x 65L
-25DZ		70	x 70L
-30DZ		75	x 75L
-35DZ		80	x 80L
-40DZ		85	x 85L
-45DZ		90	x 90L
-50DZ		95	x 95L
-75DZ		130	x 130L
-100DZ		155	x 155L

∗ ø40 to ø63: The C' and D' dimensions are the same as those of C and D.

Through-hole Type Mounting Bolt for the CDQ2KW: With Auto Switch Magnet

Mounting bolt for the through-hole mounting of the CDQ2KWB is available as an option.
Refer to the following for ordering procedures.
Order the actual number of bolts that will be used.
For models without an auto switch magnet ⇨ p. 101

Example) CQ-M3 x 40L 2 pcs.

Type: Hexagon socket head cap screw
Material: Chromium molybdenum steel
Surface treatment: Zinc chromated

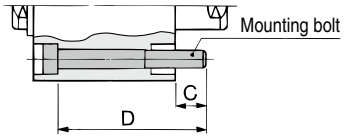

Non-rotating rod end mounting

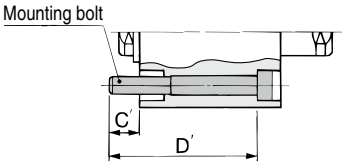

Cylinder model	C	D	Mounting bolt part no.	C'	D'	Mounting bolt part no.
CDQ2KWB12-5DCZ	6.1	40	CQ-M3 x 40L	6.1	45	CQ-M3 x 45L
-10DCZ		45	x 45L		50	x 50L
-15DCZ		50	x 50L		55	x 55L
-20DCZ		55	x 55L		60	x 60L
-25DCZ		60	x 60L		65	x 65L
-30DCZ		65	x 65L		70	x 70L
CDQ2KWB16-5DZ	7.5	45	CQ-M3 x 45L	7.5	50	CQ-M3 x 50L
-10DZ		50	x 50L		55	x 55L
-15DZ		55	x 55L		60	x 60L
-20DZ		60	x 60L		65	x 65L
-25DZ		65	x 65L		70	x 70L
-30DZ		70	x 70L		75	x 75L
CDQ2KWB20-5DZ	9	45	CQ-M5 x 45L	11	55	CQ-M5 x 55L
-10DZ		50	x 50L		60	x 60L
-15DZ		55	x 55L		65	x 65L
-20DZ		60	x 60L		70	x 70L
-25DZ		65	x 65L		75	x 75L
-30DZ		70	x 70L		80	x 80L
-35DZ		75	x 75L		85	x 85L
-40DZ		80	x 80L		90	x 90L
-45DZ		85	x 85L		95	x 95L
-50DZ		90	x 90L		100	x 100L
CDQ2KWB25-5DZ	8	45	CQ-M5 x 45L	10	55	CQ-M5 x 55L
-10DZ		50	x 50L		60	x 60L
-15DZ		55	x 55L		65	x 65L
-20DZ		60	x 60L		70	x 70L
-25DZ		65	x 65L		75	x 75L
-30DZ		70	x 70L		80	x 80L
-35DZ		75	x 75L		85	x 85L
-40DZ		80	x 80L		90	x 90L
-45DZ		85	x 85L		95	x 95L
-50DZ		90	x 90L		100	x 100L
CDQ2KWB32-5DZ	11	60	CQ-M5 x 60L	7.5	55	CQ-M5 x 55L
-10DZ		65	x 65L		60	x 60L
-15DZ		70	x 70L		65	x 65L
-20DZ		75	x 75L		70	x 70L
-25DZ		80	x 80L		75	x 75L
-30DZ		85	x 85L		80	x 80L
-35DZ		90	x 90L		85	x 85L
-40DZ		95	x 95L		90	x 90L
-45DZ		100	x 100L		95	x 95L
-50DZ		105	x 105L		100	x 100L
-75DZ		130	x 130L		125	x 125L
-100DZ		155	x 155L		150	x 150L

Cylinder model	C, C'	D, D'	Mounting bolt part no.
CDQ2KWB40-5DZ	7	55	CQ-M5 x 55L
-10DZ		60	x 60L
-15DZ		65	x 65L
-20DZ		70	x 70L
-25DZ		75	x 75L
-30DZ		80	x 80L
-35DZ		85	x 85L
-40DZ		90	x 90L
-45DZ		95	x 95L
-50DZ		100	x 100L
-75DZ		125	x 125L
-100DZ		150	x 150L
CDQ2KWB50-10DZ	12.5	65	CQ-M6 x 65L
-15DZ		70	x 70L
-20DZ		75	x 75L
-25DZ		80	x 80L
-30DZ		85	x 85L
-35DZ		90	x 90L
-40DZ		95	x 95L
-45DZ		100	x 100L
-50DZ		105	x 105L
-75DZ		130	x 130L
-100DZ		155	x 155L
CDQ2KWB63-10DZ	13.5	65	CQ-M8 x 65L
-15DZ		70	x 70L
-20DZ		75	x 75L
-25DZ		80	x 80L
-30DZ		85	x 85L
-35DZ		90	x 90L
-40DZ		95	x 95L
-45DZ		100	x 100L
-50DZ		105	x 105L
-75DZ		130	x 130L
-100DZ		155	x 155L

∗ ø40 to ø63: The C' and D' dimensions are the same as those of C and D.

Construction

Without auto switch magnet

ø12 to ø32

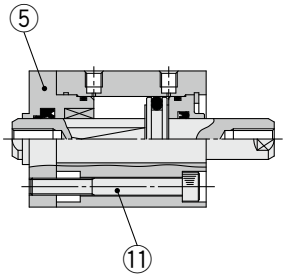

ø40 to ø63

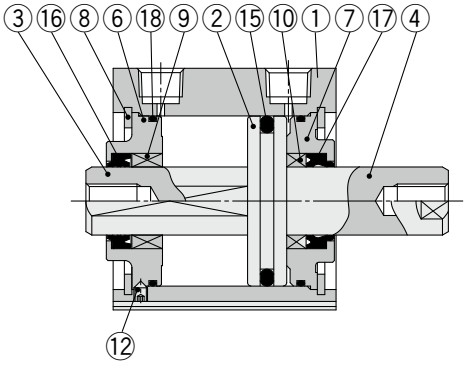

With auto switch magnet

ø12 to ø32

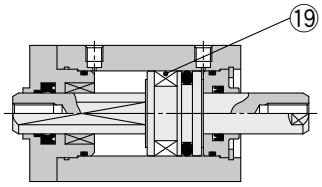

ø40 to ø63

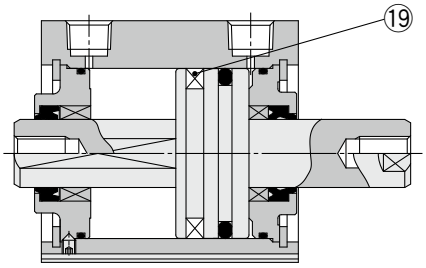

Built-in One-touch fittings

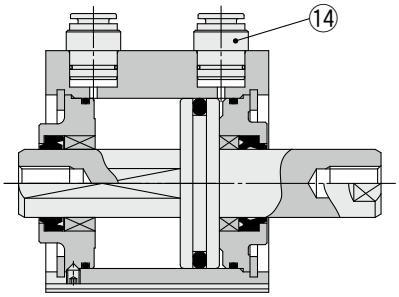

Rod end male thread

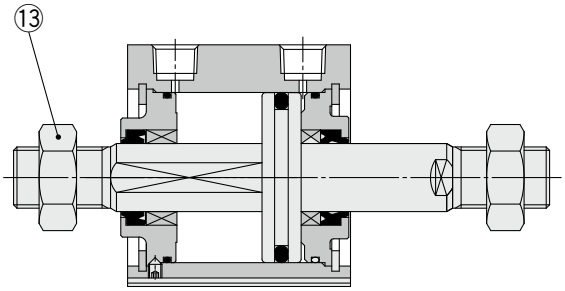

Component Parts

No.	Description	Material	Note
1	**Cylinder tube**	Aluminum alloy	Hard anodized
2	**Piston**	Aluminum alloy	
3	**Piston rod A**	Stainless steel	ø12 to ø25
		Carbon steel	ø32 to ø63, Hard chrome plating
4	**Piston rod B**	Stainless steel	ø12 to ø25
		Carbon steel	ø32 to ø63, Hard chrome plating
5	**Rod cover**	Brass	ø12, Electroless nickel plating
		Aluminum alloy	ø16 to ø32, Anodized
6	**Collar for non-rotating**	Aluminum alloy	ø40 to ø63, Anodized
7	**Collar**	Aluminum alloy	ø12 to ø40, Anodized
		Aluminum alloy casted	ø50 to ø63, Chromated, Painted
8	**Retaining ring**	Carbon tool steel	Phosphate coated
9	**Bushing for non-rotating**	Oil-impregnated sintered alloy	ø16 to ø63
10	**Bushing**	Bearing alloy	ø50, ø63
11	**Hexagon socket head cap screw**	Alloy steel	ø12 to ø32, Zinc chromated
12	**Hexagon socket head set screw**	Alloy steel	ø40 to ø63, Zinc chromated
13	**Rod end nut**	Carbon steel	Zinc chromated
14	**One-touch fitting**	—	ø32 to ø63
15	**Piston seal**	NBR	
16	**Rod seal for non-rotating**	NBR	
17	**Rod seal**	NBR	
18	**Gasket**	NBR	
19	**Magnet**	—	

Replacement Parts/Seal Kit

Bore size [mm]	Kit no.	Contents
12	CQ2KWB12-PS	Set of nos. ⑮, ⑯, ⑰, ⑱
16	CQ2KWB16-PS	
20	CQ2KWB20-PS	
25	CQ2KWB25-PS	
32	CQ2KWB32-PS	
40	CQ2KWB40-PS	
50	CQ2KWB50-PS	
63	CQ2KWB63-PS	

∗ Seal kit includes ⑮, ⑯, ⑰, ⑱. Order the seal kit based on each bore size.
∗ The seal kit does not include a grease pack. Order it separately.
Grease pack part no.: GR-S-010 (10 g)

Bore Size

ø12 to ø32 Without Auto Switch Magnet

Through-hole: CQ2KWB

ø12 to ø25

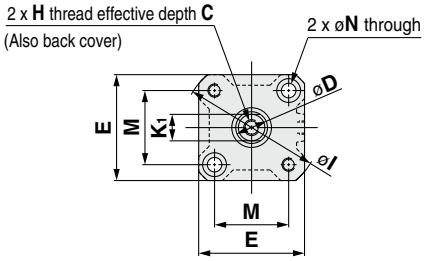

ø32

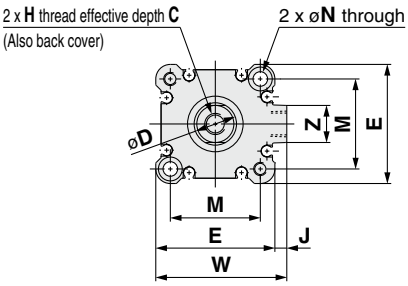

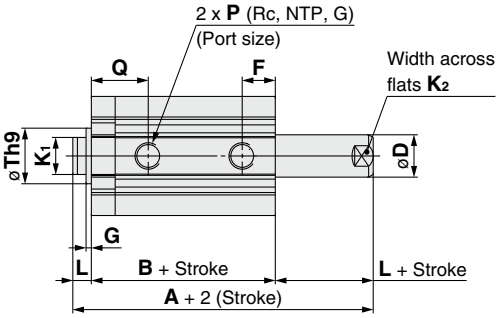

Piston rod cross section

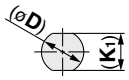

ø12, ø16

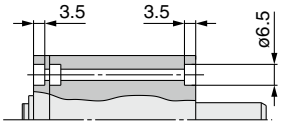

ø20 to ø32

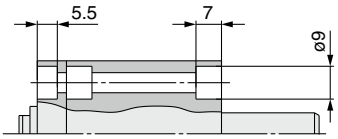

[mm]

Bore size [mm]	Stroke range [mm]	A	B	C	D	E	F	G	H	I	J	K1	K2	L	M	N	P	Q	Th9	W	Z
12	5 to 30	37.2	30.2	6	6	25	10	1.5	M3 x 0.5	32	—	5.2	5	3.5	15.5	3.5	M5 x 0.8	15	$15^{0}_{-0.043}$	—	—
16	5 to 30	38	31	8	8	29	10	1.5	M4 x 0.7	38	—	6	6	3.5	20	3.5	M5 x 0.8	15	$20^{0}_{-0.052}$	—	—
20	5 to 50	43	34	7	10	36	8	2	M5 x 0.8	47	—	8	8	4.5	25.5	5.5	M5 x 0.8	16	$13^{0}_{-0.043}$	—	—
25	5 to 50	47	37	12	12	40	9	2	M6 x 1.0	52	—	10	10	5	28	5.5	M5 x 0.8	17	$15^{0}_{-0.043}$	—	—
32	5	53.5	39.5	13	16	45	10	2	M8 x 1.25	—	4.5	14	14	7	34	5.5	M5 x 0.8	19	$21^{0}_{-0.052}$	49.5	14
	10 to 50																1/8				
	75,100	63.5	49.5																		

∗ For details on the rod end nut and accessory brackets ⇨ p. 34 to 36
∗ The positions of piston rod's width across flats (K_2) are not constant.

Rod end male thread

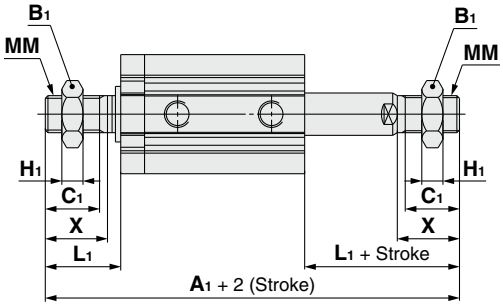

[mm]

Bore size [mm]	Stroke range [mm]	A1	B1	C1	H1	L1	MM	X
12	5 to 30	58.2	8	9	4	14	M5 x 0.8	10.5
16	5 to 30	62	10	10	5	15.5	M6 x 1.0	12
20	5 to 50	71	13	12	5	18.5	M8 x 1.25	14
25	5 to 50	82	17	15	6	22.5	M10 x 1.25	17.5
32	5 to 50	96.5	22	20.5	8	28.5	M14 x 1.5	23.5
	75,100	106.5						

The dimensions with built-in One-touch fittings are equivalent to those of the standard type, double acting, double rod. ⇨ p. 46

∗ The dimensions of ø32-5 mm stroke with built-in One-touch fittings are the same as those of the 10 mm stroke cylinder tube.

Bore Size

ø12 to ø32 With Auto Switch Magnet

Through-hole: CDQ2KWB

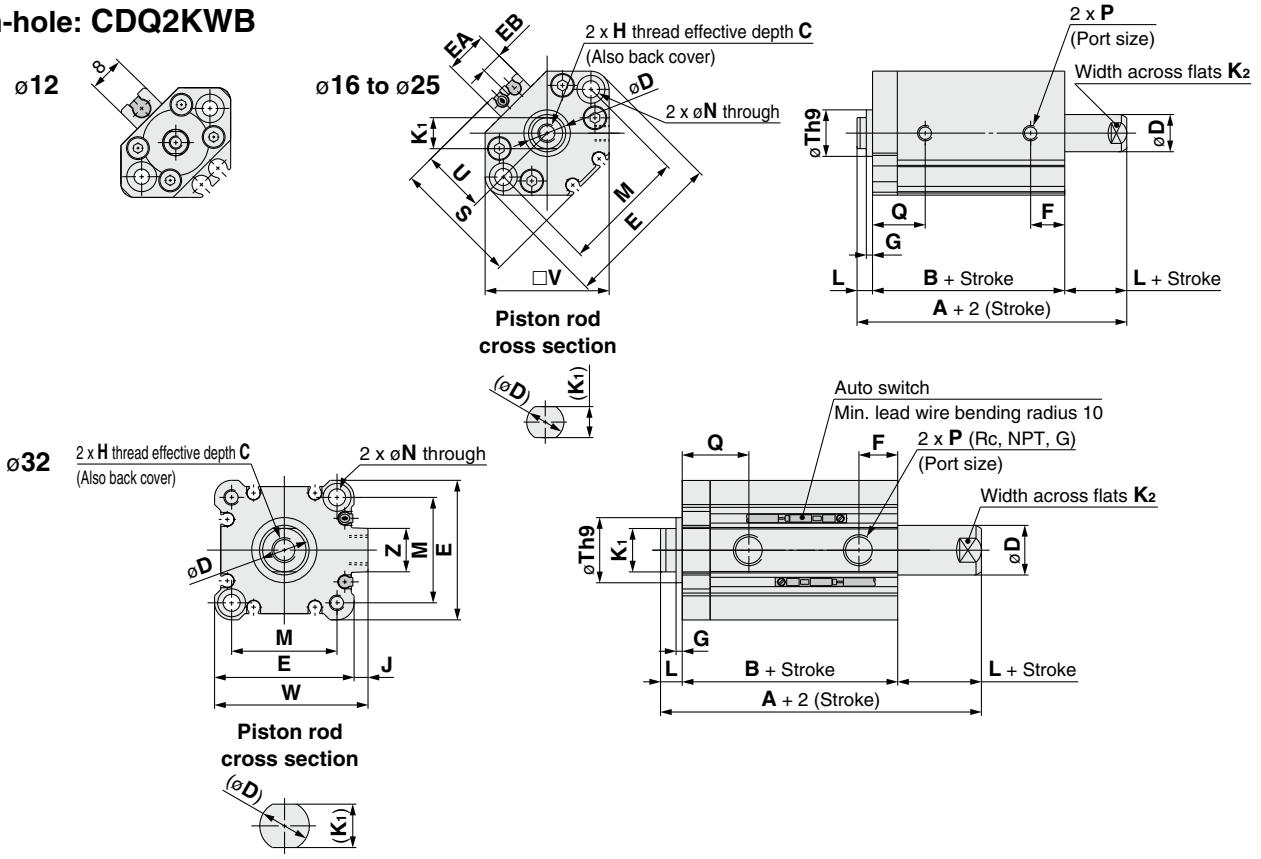

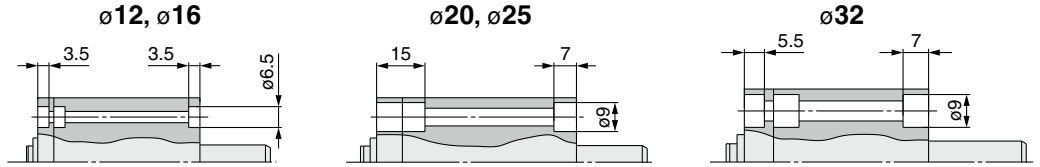

[mm]

Bore size [mm]	Stroke range [mm]	A	B	C	D	E	EA	EB	F	G	H	J	K_1	K_2	L	M	N	P	Q	S	Th9	U	V	W	Z
12	5 to 30	44.4	37.4	6	6	33	—	—	10.5	1.5	M3 x 0.5	—	5.2	5	3.5	22	3.5	M5 x 0.8	15.5	27.5	$15^{0}_{-0.043}$	14	25	—	—
16	5 to 30	48	41	8	8	37	13.2	6.6	10	1.5	M4 x 0.7	—	6	6	3.5	28	3.5	M5 x 0.8	15	29.5	$20^{0}_{-0.052}$	15	29	—	—
20	5 to 50	55	46	7	10	47	13.6	6.8	8	2	M5 x 0.8	—	8	8	4.5	36	5.5	M5 x 0.8	16	35.5	$13^{0}_{-0.043}$	18	36	—	—
25	5 to 50	57	47	12	12	52	13.6	6.8	9	2	M6 x 1.0	—	10	10	5	40	5.5	M5 x 0.8	17	40.5	$15^{0}_{-0.043}$	21	40	—	—
32	5 to 50, 75, 100	63.5	49.5	13	16	45	—	—	10	2	M8 x 1.25	4.5	14	14	7	34	5.5	1/8	19	—	$21^{0}_{-0.052}$	—	—	49.5	14

∗ For details on the rod end nut and accessory brackets ⇨ p. 34 to 36
∗ The positions of piston rod's width across flats (K_2) are not constant.
∗ For the auto switch proper mounting position and mounting height ⇨ p. 149 to 156

Rod end male thread

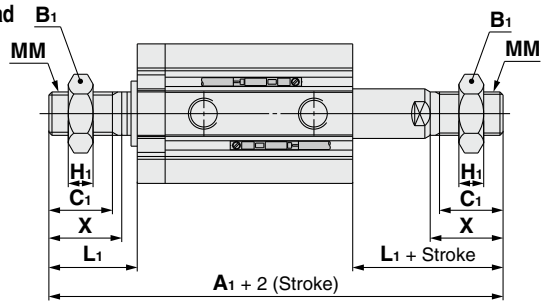

[mm]

Bore size [mm]	A_1	B_1	C_1	H_1	L_1	MM	X
12	65.4	8	9	4	14	M5 x 0.8	10.5
16	72	10	10	5	15.5	M6 x 1.0	12
20	83	13	12	5	18.5	M8 x 1.25	14
25	92	17	15	6	22.5	M10 x 1.25	17.5
32	106.5	22	20.5	8	28.5	M14 x 1.5	23.5

The dimensions with built-in One-touch fittings are equivalent to those of the standard type, double acting, double rod. ⇨ p. 46

∗ The dimensions of ø32-5 mm stroke with built-in One-touch fittings are the same as those of the 10 mm stroke cylinder tube.

Bore Size

ø40 to ø63 With/Without Auto Switch Magnet

Through-hole: CⒹQ2KWB

ø63

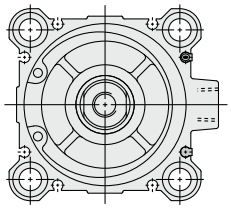

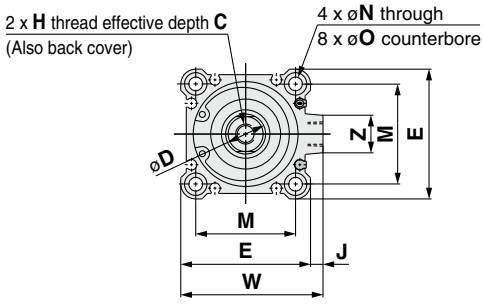

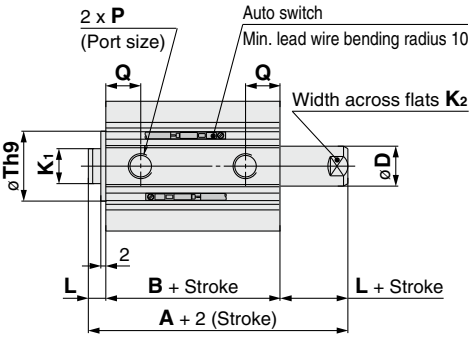

Piston rod cross section

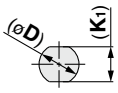

[mm]

Bore size [mm]	Stroke range [mm]	Without auto switch magnet A	Without auto switch magnet B	With auto switch magnet A	With auto switch magnet B	C	D	E	H	J	K_1	K_2	L	M	N	O	P	Q	Th9	W	Z
40	5 to 50	54	40	64	50	13	16	52	M8 x 1.25	5	14	14	7	40	5.5	9 depth 7	1/8	12.5	$28^{0}_{-0.052}$	57	15
	75,100	64	50																		
50	10 to 50	56.5	40.5	66.5	50.5	15	20	64	M10 x 1.5	7	18	17	8	50	6.6	11 depth 8	1/4	14	$35^{0}_{-0.062}$	71	19
	75,100	66.5	50.5																		
63	10 to 50	58	42	68	52	15	20	77	M10 x 1.5	7	18	17	8	60	9	14 depth 10.5	1/4	15.5	$35^{0}_{-0.062}$	84	19

∗ For details on the rod end nut and accessory brackets ⇨ p. 34 to 36
∗ The positions of piston rod's width across flats (K_2) are not constant.
∗ For the auto switch proper mounting position and mounting height ⇨ p. 149 to 156

Both ends tapped

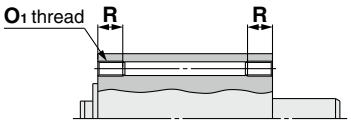

[mm]

Bore size [mm]	O_1	R
40	M6 x 1.0	10
50	M8 x 1.25	14
63	M10 x 1.5	18

Rod end male thread

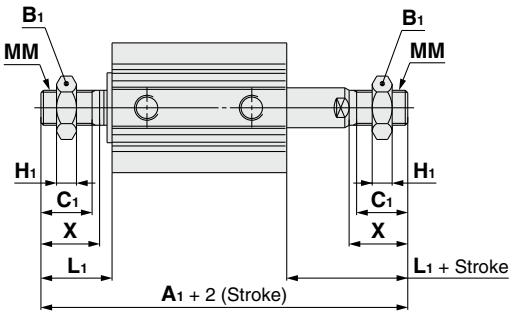

[mm]

Bore size [mm]	Stroke range [mm]	Without auto switch magnet A_1	With auto switch magnet A_1	B_1	C_1	H_1	L_1	MM	X
40	5 to 50	97	107	22	20.5	8	28.5	M14 x 1.5	23.5
	75, 100	107							
50	10 to 50	107.5	117.5	27	26	11	33.5	M18 x 1.5	28.5
	75, 100	117.5							
63	10 to 50	109	119	27	26	11	33.5	M18 x 1.5	28.5
	75, 100	119							

The dimensions with built-in One-touch fittings are equivalent to those of the standard type, double acting, double rod. ⇨ p. 46, 47

Dimensions of Each Mounting Bracket

The dimensions of each mounting bracket are the same as those of the standard type, double acting, double rod (except the configuration of the piston rod). Refer to pages 48 to 50.

Compact Cylinder: Water Resistant
Double Acting, Single Rod
CQ2-R/V Series
ø20, ø25, ø32, ø40, ø50, ø63, ø80, ø100

How to Order

Without auto switch ø20, ø25

CQ2 B 20 ☐ R – 30 D ☐ — ☐

Without auto switch ø32 to ø100

CQ2 B 32 ☐ R – 30 D ☐ Z – ☐

With auto switch

CDQ2 B 32 ☐ R – 30 D ☐ Z – M9BA ☐ – ☐

❶ ❷ ❸ ❹ ❺ ❻ ❼ ❽ ❾ ❿ ⓫

With auto switch magnet
The overall length of the cylinder with an auto switch magnet is longer than that of the cylinder without an auto switch magnet by the length of the built-in magnet. For details, refer to the dimensions of each size.

❶ Mounting

B	Through-hole	(ø20 to ø100)
A	Both ends tapped	(ø40 to ø100)
L	Foot	
LC	Compact foot	
F	Rod flange	
G	Head flange	
D	Double clevis	

∗ Mounting brackets are shipped together with the product but do not come assembled.
∗ A through-hole type mounting bolt is available as an option. For details ⇨ p. 110

❷ Bore size

20	20 mm
25	25 mm
32	32 mm
40	40 mm
50	50 mm
63	63 mm
80	80 mm
100	100 mm

❸ Port thread type

Nil	M thread
	Rc
TN	NPT
TF	G

❹ Water-resistant cylinder

R	NBR seal (Nitrile rubber)
V	FKM seal (Fluororubber)

❺ Cylinder stroke (For details on the minimum stroke for auto switch mounting ⇨ p. 157) [mm]

Bore size	Standard stroke
20, 25	5, 10, 15, 20, 25, 30, 35, 40, 45, 50
32, 40	5, 10, 15, 20, 25, 30, 35, 40, 45, 50, 75, 100
50, 63, 80, 100	10, 15, 20, 25, 30, 35, 40, 45, 50, 75, 100

∗ For the manufacturing of intermediate strokes ⇨ p. 108

❻ Action

D	Double acting

❼ Body option

Nil	Rod end female thread
M	Rod end male thread

❽ Auto switch mounting groove

Z	ø20 to ø25	2 surfaces
	ø32 to ø100	4 surfaces

❾ Auto switch

Nil	Without auto switch

∗ For applicable auto switches, refer to the table below.

❿ Number of auto switches

Nil	2
S	1
n	n

⓫ Made to order common specifications

For details ⇨ p. 108

For details on **auto switch mounting** ⇨ p. 149 to 165

- Auto Switch Proper Mounting Position (Detection at stroke end) and Mounting Height
- Minimum Stroke for Auto Switch Mounting
- Operating Range
- Auto Switch Mounting Brackets/Part Nos.

Cylinder Model with Auto Switch Magnet

If a cylinder with an auto switch magnet and without an auto switch is required, there is no need to enter the symbol for the auto switch.
(Example) CDQ2B32R-25DMZ

Applicable Auto Switches / Refer to the **Web Catalog** for further information on auto switches.

Type	Special function	Electrical entry	Indicator light	Wiring (Output)	Load voltage DC		Load voltage AC	Auto switch model Perpendicular	Auto switch model In-line	Lead wire length [m] 0.5 (Nil)	1 (M)	3 (L)	5 (Z)	Pre-wired connector	Applicable load	
Solid state auto switch	Water resistant (2-color indicator)	Grommet	Yes	3-wire (NPN)	24 V	5 V, 12 V	—	M9NAV	M9NA	○	○	●	○	○	IC circuit	Relay, PLC
				3-wire (PNP)				M9PAV	M9PA	○	○	●	○	○		
				2-wire		12 V		M9BAV	M9BA	○	○	●	○	○	—	

∗ Lead wire length symbols: 0.5 m ····· Nil (Example) M9BA
1 m ····· M (Example) M9BAM
3 m ····· L (Example) M9BAL
5 m ····· Z (Example) M9BAZ

∗ Solid state auto switches marked with a "○" are produced upon receipt of order.

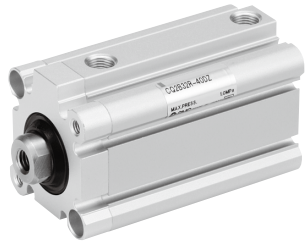

Symbol

Without cushion

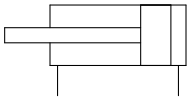

Specifications

Bore size [mm]	20	25	32	40	50	63	80	100
Action	Double acting, Single rod							
Fluid	Air							
Proof pressure	1.5 MPa							
Maximum operating pressure	1.0 MPa							
Minimum operating pressure	0.08 MPa							
Ambient and fluid temperatures	Without auto switch magnet: –10 to 70°C With auto switch magnet: –10 to 60°C (No freezing)							
Lubrication	Not required (Non-lube)							
Piston speed	50 to 500 mm/s							
Cushion	None							
Allowable kinetic energy [J]	0.055	0.09	0.15	0.26	0.46	0.77	1.36	2.27
Stroke length tolerance	$^{+1.0\ mm}_{0}$							

Manufacturing of Intermediate Strokes

Type	A spacer is installed in the standard stroke body.	
Part no.	Refer to "How to Order" for the standard model number. (⇨ p. 107)	
Description	Strokes in 1 mm increments are available by installing a spacer in the standard stroke cylinder.	
Stroke range	Bore size	Stroke range
	20, 25	1 to 49
	32 to 100	1 to 99
Example	Part no.: CQ2B50R-57DZ CQ2B50R-75DZ with 18 mm width spacer inside The B dimension is 115.5 mm.	

Made to Order Common Specifications (For details ⇨ p. 167 to 196)

Symbol	Specifications
-XB10	Intermediate stroke (Exclusive body type)
-XC6(A)	Piston rod/Retaining ring/Rod end nut material: Stainless steel
-XC26	With split pins for double clevis pin/double knuckle joint pin and flat washers
-XC85	Grease for food processing equipment

∗ Stainless steel accessories are also available. For details ⇨ p. 34

Mounting Bracket Part Nos.

Bore size [mm]	Foot∗1	Compact foot∗1	Flange	Double clevis	Double clevis pivot bracket
40	CQ-L040	CQ-LC040	CQ-F040	CQ-D040	CQ-C040
50	CQ-L050	CQ-LC050	CQ-F050	CQ-D050	CQ-C050
63	CQ-L063	CQ-LC063	CQ-F063	CQ-D063	CQ-C063
80	CQ-L080	CQ-LC080	CQ-F080	CQ-D080	CQ-C080
100	CQ-L100	CQ-LC100	CQ-F100	CQ-D100	CQ-C100

∗1 When ordering foot and compact foot brackets, order 2 pieces per cylinder.
∗ Parts included with each type of bracket are as follows.
Foot, Compact foot, Flange: Body mounting bolts, Double clevis: Clevis pin, Type C retaining rings for axis, Body mounting bolts
∗ Foot, compact foot, flange brackets, etc., cannot be retrofitted for through-hole mounting (B).

Dimensions of Each Mounting Bracket

The dimensions of each mounting bracket are the same as those of the standard type, double acting, single rod (except the configuration of the piston rod). Refer to pages 29 to 33.

Moisture Control Tube
IDK Series

When operating an actuator with a small bore size and a short stroke at a high frequency, dew condensation (water droplets) may occur inside the piping depending on the conditions.
Simply connecting the moisture control tube to the actuator will prevent dew condensation from occurring. For details, refer to the **Web Catalog**.

⚠ Precautions

Refer to pages 197 and 199 before handling the products.

Theoretical Output

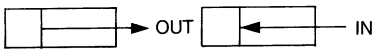

[N]

Bore size [mm]	Operating direction	Operating pressure [MPa]		
		0.3	0.5	0.7
20	IN	71	118	165
	OUT	94	157	220
25	IN	113	189	264
	OUT	147	245	344
32	IN	181	302	422
	OUT	241	402	563
40	IN	317	528	739
	OUT	377	628	880
50	IN	495	825	1150
	OUT	589	982	1370
63	IN	841	1400	1960
	OUT	935	1560	2180
80	IN	1360	2270	3170
	OUT	1510	2510	3520
100	IN	2140	3570	5000
	OUT	2360	3930	5500

Weight

Without Auto Switch Magnet

[g]

Bore size [mm]	Cylinder stroke [mm]											
	5	10	15	20	25	30	35	40	45	50	75	100
20	112	126	141	155	169	184	198	212	227	241	—	—
25	149	165	182	197	213	229	245	261	277	293	—	—
32	203	224	246	267	288	309	330	352	373	394	544	650
40	220	241	263	284	306	327	349	371	392	414	568	680
50	—	378	411	444	476	509	542	575	608	641	879	1051
63	—	547	585	623	662	700	738	776	814	852	1125	1321
80	—	973	1034	1094	1154	1214	1275	1335	1395	1455	1873	2169
100	—	1703	1783	1863	1944	2024	2104	2185	2265	2345	2915	3323

With Auto Switch Magnet

[g]

Bore size [mm]	Cylinder stroke [mm]											
	5	10	15	20	25	30	35	40	45	50	75	100
20	130	142	155	167	179	191	204	216	228	240	—	—
25	182	197	213	228	244	259	275	290	306	320	—	—
32	263	284	305	327	348	369	390	412	433	454	561	668
40	293	315	336	358	379	401	422	444	465	487	598	710
50	—	489	522	555	588	620	653	687	720	753	925	1097
63	—	700	738	776	814	852	890	928	966	1004	1201	1397
80	—	1219	1279	1340	1400	1460	1520	1581	1641	1701	1998	2295
100	—	2061	2142	2222	2302	2383	2463	2543	2624	2704	3112	3520

Additional Weight

[g]

Bore size [mm]		**20**	**25**	**32**	**40**	**50**	**63**	**80**	**100**
Both ends tapped		—	—	—	6	6	19	45	45
Rod end male thread	Male thread	6	12	26	27	53	53	120	175
	Nut	4	8	17	17	32	32	49	116
Foot (Including mounting bolts)		—	—	—	122	194	272	550	912
Compact foot (Including mounting bolts)		—	—	—	93	148	210	454	707
Rod flange (Including mounting bolts)		—	—	—	214	373	559	1056	1365
Head flange (Including mounting bolts)		—	—	—	198	348	534	1017	1309
Double clevis (Including pin, retaining rings, bolts)		—	—	—	196	393	554	1109	1887

Calculation: (Example) **CDQ2D40R-20DMZ**
- Basic weight: CDQ2B40R-20DZ ····· 358 g
- Additional weight: Both ends tapped ····· 6 g
  Rod end male thread ····· 44 g
  Double clevis ····· 196 g
  604 g

Add each weight of auto switches when auto switches are mounted.

Through-hole Type Mounting Bolt for the CQ2: Without Auto Switch Magnet

Mounting bolt for the through-hole mounting of the CQ2B is available as an option.
Refer to the following for ordering procedures.
Order the actual number of bolts that will be used.

Example) CQ-M5 x 35L 2 pcs.

Type: Hexagon socket head cap screw
Material: Chromium molybdenum steel
Surface treatment: Zinc chromated

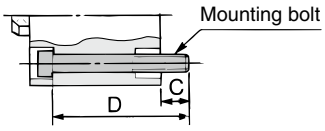

Cylinder model	C	D	Mounting bolt part no.
CQ2B20R/V-5D	7.5	35	CQ-M5 x 35L
-10D		40	x 40L
-15D		45	x 45L
-20D		50	x 50L
-25D		55	x 55L
-30D		60	x 60L
-35D		65	x 65L
-40D		70	x 70L
-45D		75	x 75L
-50D		80	x 80L
CQ2B25R/V-5D	9.5	40	CQ-M5 x 40L
-10D		45	x 45L
-15D		50	x 50L
-20D		55	x 55L
-25D		60	x 60L
-30D		65	x 65L
-35D		70	x 70L
-40D		75	x 75L
-45D		80	x 80L
-50D		85	x 85L
CQ2B32R/V-5DZ	9	40	CQ-M5 x 40L
-10DZ		45	x 45L
-15DZ		50	x 50L
-20DZ		55	x 55L
-25DZ		60	x 60L
-30DZ		65	x 65L
-35DZ		70	x 70L
-40DZ		75	x 75L
-45DZ		80	x 80L
-50DZ		85	x 85L
-75DZ		120	x 120L
-100DZ		145	x 145L

Cylinder model	C	D	Mounting bolt part no.
CQ2B40R/V-5DZ	7.5	35	CQ-M5 x 35L
-10DZ		40	x 40L
-15DZ		45	x 45L
-20DZ		50	x 50L
-25DZ		55	x 55L
-30DZ		60	x 60L
-35DZ		65	x 65L
-40DZ		70	x 70L
-45DZ		75	x 75L
-50DZ		80	x 80L
-75DZ		115	x 115L
-100DZ		140	x 140L
CQ2B50R/V-10DZ	12.5	45	CQ-M6 x 45L
-15DZ		50	x 50L
-20DZ		55	x 55L
-25DZ		60	x 60L
-30DZ		65	x 65L
-35DZ		70	x 70L
-40DZ		75	x 75L
-45DZ		80	x 80L
-50DZ		85	x 85L
-75DZ		120	x 120L
-100DZ		145	x 145L
CQ2B63R/V-10DZ	14.5	50	CQ-M8 x 50L
-15DZ		55	x 55L
-20DZ		60	x 60L
-25DZ		65	x 65L
-30DZ		70	x 70L
-35DZ		75	x 75L
-40DZ		80	x 80L
-45DZ		85	x 85L
-50DZ		90	x 90L
-75DZ		125	x 125L
-100DZ		150	x 150L

Cylinder model	C	D	Mounting bolt part no.
CQ2B80R/V-10DZ	15	55	CQ-M10 x 55L
-15DZ		60	x 60L
-20DZ		65	x 65L
-25DZ		70	x 70L
-30DZ		75	x 75L
-35DZ		80	x 80L
-40DZ		85	x 85L
-45DZ		90	x 90L
-50DZ		95	x 95L
-75DZ		130	x 130L
-100DZ		155	x 155L
CQ2B100R/V-10DZ	15.5	65	CQ-M10 x 65L
-15DZ		70	x 70L
-20DZ		75	x 75L
-25DZ		80	x 80L
-30DZ		85	x 85L
-35DZ		90	x 90L
-40DZ		95	x 95L
-45DZ		100	x 100L
-50DZ		105	x 105L
-75DZ		140	x 140L
-100DZ		165	x 165L

Through-hole Type Mounting Bolt for the CDQ2: With Auto Switch Magnet

Cylinder model	C	D	Mounting bolt part no.
CDQ2B20R/V-5DZ	10.5	50	CQ-M5 x 50L
-10DZ		55	x 55L
-15DZ		60	x 60L
-20DZ		65	x 65L
-25DZ		70	x 70L
-30DZ		75	x 75L
-35DZ		80	x 80L
-40DZ		85	x 85L
-45DZ		90	x 90L
-50DZ		95	x 95L
CDQ2B25R/V-5DZ	9.5	50	CQ-M5 x 50L
-10DZ		55	x 55L
-15DZ		60	x 60L
-20DZ		65	x 65L
-25DZ		70	x 70L
-30DZ		75	x 75L
-35DZ		80	x 80L
-40DZ		85	x 85L
-45DZ		90	x 90L
-50DZ		95	x 95L
CDQ2B32R/V-5DZ	9	50	CQ-M5 x 50L
-10DZ		55	x 55L
-15DZ		60	x 60L
-20DZ		65	x 65L
-25DZ		70	x 70L
-30DZ		75	x 75L
-35DZ		80	x 80L
-40DZ		85	x 85L
-45DZ		90	x 90L
-50DZ		95	x 95L
-75DZ		120	x 120L
-100DZ		145	x 145L

Cylinder model	C	D	Mounting bolt part no.
CDQ2B40R/V-5DZ	7.5	45	CQ-M5 x 45L
-10DZ		50	x 50L
-15DZ		55	x 55L
-20DZ		60	x 60L
-25DZ		65	x 65L
-30DZ		70	x 70L
-35DZ		75	x 75L
-40DZ		80	x 80L
-45DZ		85	x 85L
-50DZ		90	x 90L
-75DZ		115	x 115L
-100DZ		140	x 140L
CDQ2B50R/V-10DZ	12.5	55	CQ-M6 x 55L
-15DZ		60	x 60L
-20DZ		65	x 65L
-25DZ		70	x 70L
-30DZ		75	x 75L
-35DZ		80	x 80L
-40DZ		85	x 85L
-45DZ		90	x 90L
-50DZ		95	x 95L
-75DZ		120	x 120L
-100DZ		145	x 145L
CDQ2B63R/V-10DZ	14.5	60	CQ-M8 x 60L
-15DZ		65	x 65L
-20DZ		70	x 70L
-25DZ		75	x 75L
-30DZ		80	x 80L
-35DZ		85	x 85L
-40DZ		90	x 90L
-45DZ		95	x 95L
-50DZ		100	x 100L
-75DZ		125	x 125L
-100DZ		150	x 150L

Cylinder model	C	D	Mounting bolt part no.
CDQ2B80R/V-10DZ	15	65	CQ-M10 x 65L
-15DZ		70	x 70L
-20DZ		75	x 75L
-25DZ		80	x 80L
-30DZ		85	x 85L
-35DZ		90	x 90L
-40DZ		95	x 95L
-45DZ		100	x 100L
-50DZ		105	x 105L
-75DZ		130	x 130L
-100DZ		155	x 155L
CDQ2B100R/V-10DZ	15.5	75	CQ-M10 x 75L
-15DZ		80	x 80L
-20DZ		85	x 85L
-25DZ		90	x 90L
-30DZ		95	x 95L
-35DZ		100	x 100L
-40DZ		105	x 105L
-45DZ		110	x 110L
-50DZ		115	x 115L
-75DZ		140	x 140L
-100DZ		165	x 165L

Construction

Without auto switch magnet

ø20 to ø32

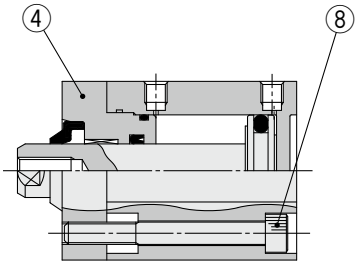

ø40 to ø100

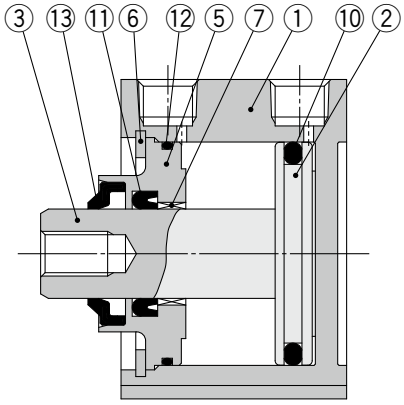

Rod end male thread

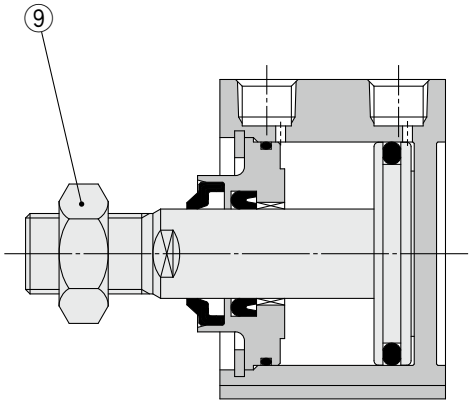

With auto switch magnet

ø20 to ø32

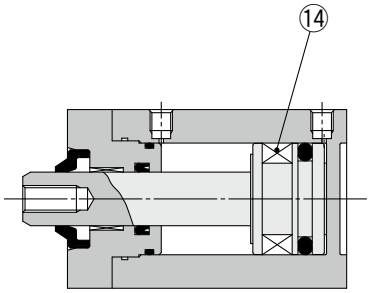

ø40 to ø100

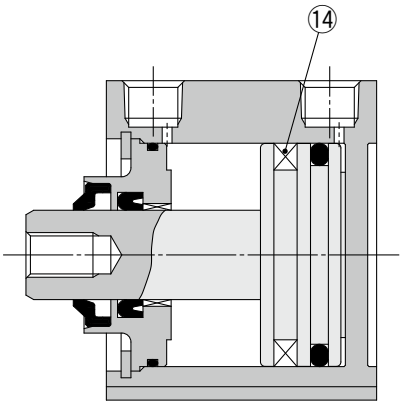

Component Parts

No.	Description	Material	Note
1	**Cylinder tube**	Aluminum alloy	Hard anodized
2	**Piston**	Aluminum alloy	
3	**Piston rod**	Stainless steel	ø20 to ø25
		Carbon steel	ø32 to ø100, Hard chrome plating
4	**Rod cover**	Aluminum alloy	ø20 to ø32, Anodized
5	**Collar**	Aluminum alloy	ø40 to ø100, Anodized
6	**Retaining ring**	Carbon tool steel	ø40 to ø100, Phosphate coated
7	**Bushing**	Oil-impregnated sintered alloy	ø20, ø25
		Bearing alloy	ø32 to ø100
8	Hexagon socket head cap screw	Chromium molybdenum steel	ø20 to ø32, Zinc chromated
9	**Rod end nut**	Carbon steel	Zinc chromated
10	**Piston seal**	R: NBR	
		V: FKM	
11	**Rod seal**	R: NBR	
		V: FKM	
12	**Tube gasket**	R: NBR	
		V: FKM	
13	**Rod scraper**	R: NBR	
		V: FKM	
14	**Magnet**	—	

∗ R: NBR seal (Nitrile rubber) V: FKM seal (Fluororubber)

Replacement Parts/Seal Kit

Bore size [mm]	Kit no.		Contents
	R: NBR	V: FKM	
20	CQ2B20R-PS	CQ2B20V-PS	Set of nos. ⑩, ⑪, ⑫
25	CQ2B25R-PS	CQ2B25V-PS	
32	CQ2B32R-PS	CQ2B32V-PS	
40	CQ2B40R-PS	CQ2B40V-PS	
50	CQ2B50R-PS	CQ2B50V-PS	
63	CQ2B63R-PS	CQ2B63V-PS	
80	CQ2B80R-PS	CQ2B80V-PS	
100	CQ2B100R-PS	CQ2B100V-PS	

∗ Seal kit includes ⑩, ⑪, ⑫. Order the seal kit based on each bore size.
∗ A rod scraper cannot be replaced independently. It is press-fitted, so replace it not only with a rod cover and collar, but also with a rod cover assembly and collar assembly.
∗ The seal kit does not include a grease pack. Order it separately.
Grease pack part no.: GR-S-010 (10 g)

Bore Size

ø20, ø25 Without Auto Switch Magnet

Through-hole: CQ2B-R/V

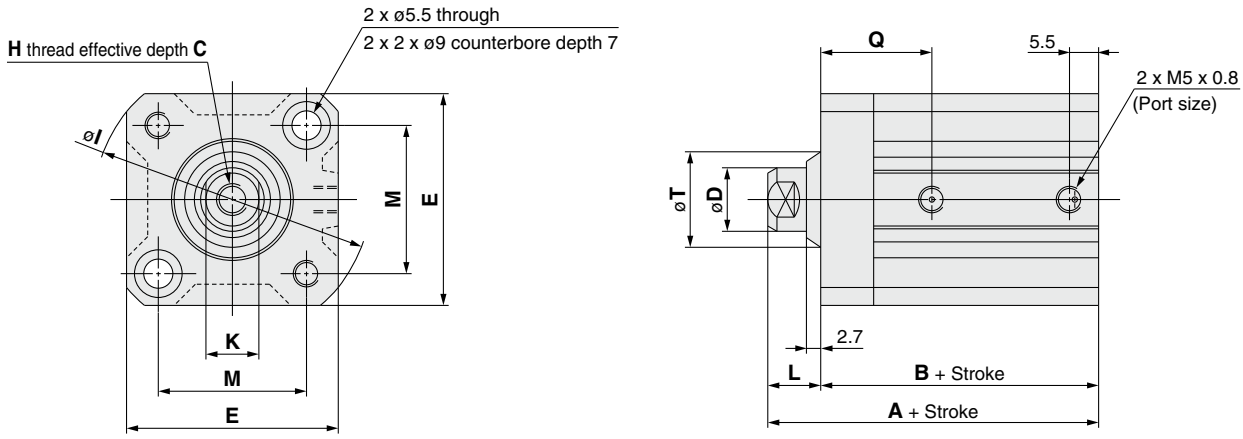

[mm]

Bore size [mm]	Stroke range [mm]	A	B	C	D	E	H	I	K	L	M	Q	T
20	5 to 50	39	29.5	7	10	36	M5 x 0.8	47	8	9.5	25.5	18	16.1
25	5 to 50	42.5	32.5	12	12	40	M6 x 1.0	52	10	10	28	19	18.1

∗ For details on the rod end nut and accessory brackets ⇨ p. 34 to 36
∗ For calculation on the longitudinal dimension of intermediate strokes ⇨ p. 108

Rod end male thread

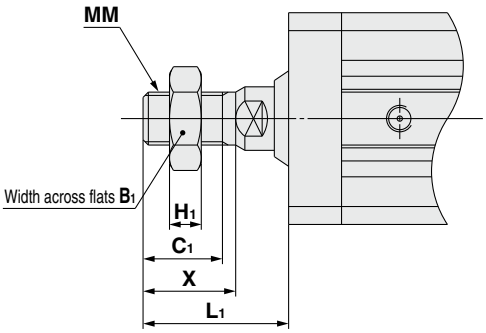

[mm]

Bore size [mm]	B_1	C_1	H_1	L_1	MM	X
20	13	12	5	23.5	M8 x 1.25	14
25	17	15	6	27.5	M10 x 1.25	17.5

Bore Size

ø20, ø25 With Auto Switch Magnet

Through-hole: CDQ2B-R/V

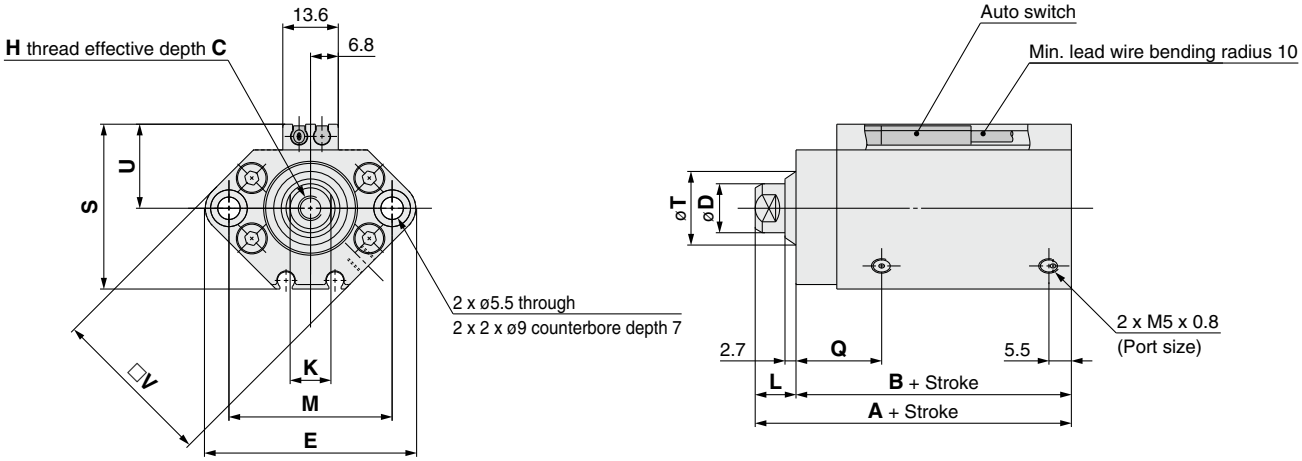

[mm]

Bore size [mm]	Stroke range [mm]	A	B	C	D	E	H	K	L	M	Q	S	T	U	V
20	5 to 50	51	41.5	7	10	47	M5 x 0.8	8	9.5	36	18	35.5	16.1	18	36
25	5 to 50	52.5	42.5	12	12	52	M6 x 1.0	10	10	40	19	40.5	18.1	21	40

∗ For details on the rod end nut and accessory brackets ⇨ p. 34 to 36
∗ For calculation on the longitudinal dimension of intermediate strokes ⇨ p. 108
∗ For the auto switch proper mounting position and mounting height ⇨ p. 149 to 156

Rod end male thread

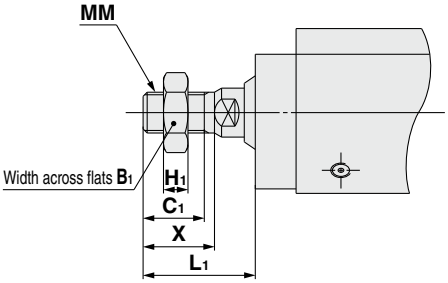

[mm]

Bore size [mm]	B_1	C_1	H_1	L_1	MM	X
20	13	12	5	23.5	M8 x 1.25	14
25	17	15	6	27.5	M10 x 1.25	17.5

Bore Size

ø32 With/Without Auto Switch Magnet

Through-hole: CⒹQ2B-R/V

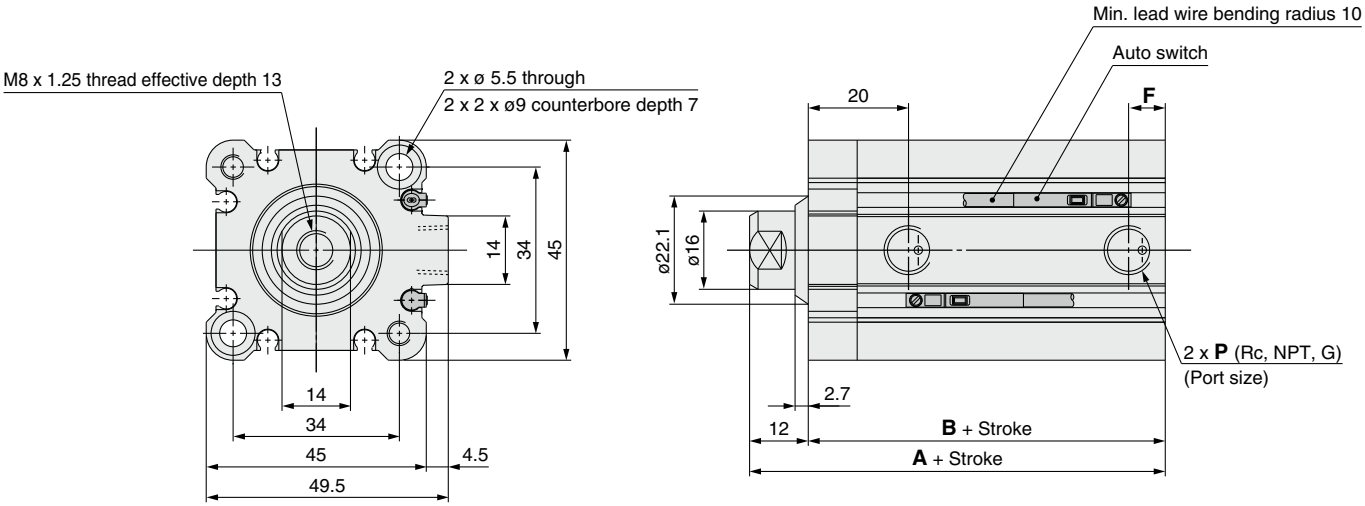

[mm]

Stroke range [mm]	Without auto switch magnet				With auto switch magnet			
	A	B	F	P	A	B	F	P
5	45	33	5.5	M5 x 0.8	55	43	7.5	1/8
10 to 50			7.5	1/8				
75, 100	55	43						

∗ For details on the rod end nut and accessory brackets ⇨ p. 34 to 36
∗ For calculation on the longitudinal dimension of intermediate strokes ⇨ p. 108

Rod end male thread

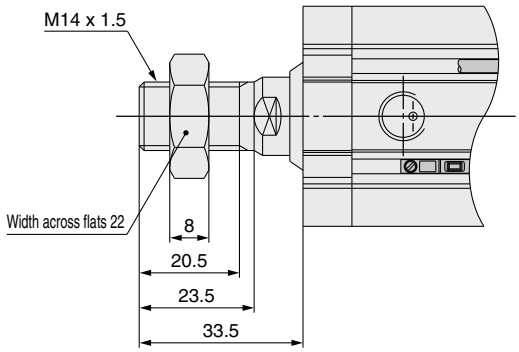

Bore Size

ø40 to ø100 With/Without Auto Switch Magnet

Through-hole: CⒹQ2B-R/V

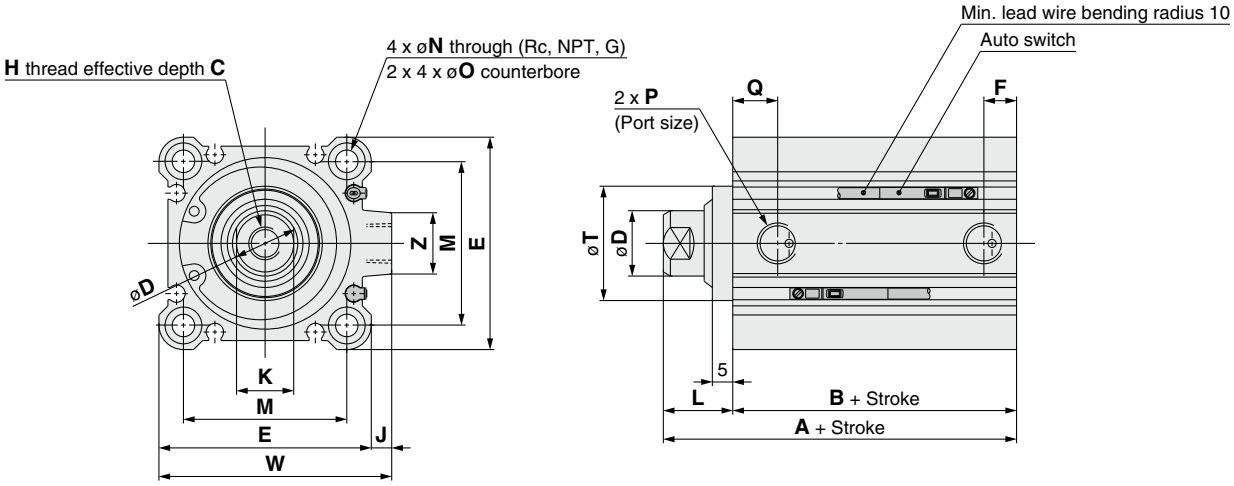

[mm]

Bore size [mm]	Stroke range [mm]	Without auto switch magnet A	Without auto switch magnet B	With auto switch magnet A	With auto switch magnet B	C	D	E	F	H	J	K	L	M	N	O	P	Q	T	W	Z
40	5 to 50	46.5	29.5	56.5	39.5	13	16	52	7.5	M8 x 1.25	5	14	17	40	5.5	9 depth 7	1/8	12.5	28	57	15
	75, 100	56.5	39.5																		
50	10 to 50	48.5	30.5	58.5	40.5	15	20	64	10.5	M10 x 1.5	7	17	18	50	6.6	11 depth 8	1/4	10.5	35	71	19
	75, 100	58.5	40.5																		
63	10 to 50	54	36	64	46	15	20	77	10.5	M10 x 1.5	7	17	18	60	9	14 depth 10.5	1/4	15	35	84	19
	75, 100	64	46																		
80	10 to 50	63.5	43.5	73.5	53.5	21	25	98	12.5	M16 x 2.0	6	22	20	77	11	17.5 depth 13.5	3/8	16	43	104	25
	75, 100	73.5	53.5																		
100	10 to 50	75	53	85	63	27	30	117	13	M20 x 2.5	6.5	27	22	94	11	17.5 depth 13.5	3/8	23	59	123.5	25
	75, 100	85	63																		

∗ For details on the rod end nut and accessory brackets ⇨ p. 34 to 36
∗ For calculation on the longitudinal dimension of intermediate strokes ⇨ p. 108
∗ For the auto switch proper mounting position and mounting height ⇨ p. 149 to 156

Both ends tapped

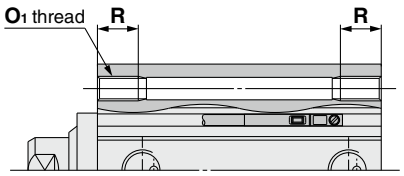

[mm]

Bore size [mm]	O_1	R
40	M6 x 1.0	10
50	M8 x 1.25	14
63	M10 x 1.5	18
80	M12 x 1.75	22
100	M12 x 1.75	22

Rod end male thread

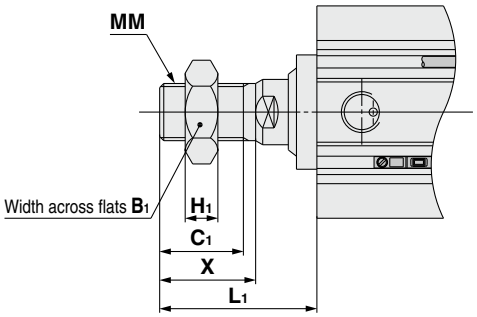

[mm]

Bore size [mm]	B_1	C_1	H_1	L_1	MM	X
40	22	20.5	8	38.5	M14 x 1.5	23.5
50	27	26	11	43.5	M18 x 1.5	28.5
63	27	26	11	43.5	M18 x 1.5	28.5
80	32	32.5	13	53.5	M22 x 1.5	35.5
100	41	32.5	16	53.5	M26 x 1.5	35.5

Dimensions of Each Mounting Bracket

The dimensions of each mounting bracket are the same as those of the standard type, double acting, single rod (except the configuration of the piston rod). Refer to pages 29 to 33.

Compact Cylinder: Water Resistant
Double Acting, Double Rod
CQ2W-R/V Series
ø40, ø50, ø63, ø80, ø100

How to Order

Without auto switch: CQ2W B 40 □ R – 30 D □ Z – □

With auto switch: CDQ2W B 40 □ R – 30 D □ Z – M9BA □ – □

With auto switch (Built-in magnet)

❶ ❷ ❸ ❹ ❺ ❻ ❼ ❽ ❾ ❿ ⓫

❶ Mounting

B	Through-hole
A	Both ends tapped
L	Foot
LC	Compact foot
F	Rod flange

∗ Mounting brackets are shipped together with the product but do not come assembled.
∗ A through-hole type mounting bolt is available as an option. For details ⇨ p. 119

❷ Bore size

40	40 mm
50	50 mm
63	63 mm
80	80 mm
100	100 mm

❸ Port thread type

Nil	M thread
	Rc
TN	NPT
TF	G

❹ Water-resistant cylinder

R	NBR seal (Nitrile rubber)
V	FKM seal (Fluororubber)

❺ Cylinder stroke [mm]

For standard strokes ⇨ p. 117

❻ Action

D	Double acting

❼ Body option

Nil	Rod end female thread
M	Rod end male thread

❽ Auto switch mounting groove

Z	ø40 to ø100	4 surfaces

❾ Auto switch

Nil	Without auto switch

∗ For applicable auto switches, refer to the table below.

❿ Number of auto switches

Nil	2
S	1
n	n

⓫ Made to order common specifications

For details ⇨ p. 117

For details on **auto switch mounting** ⇨ p. 149 to 165

- Auto Switch Proper Mounting Position (Detection at stroke end) and Mounting Height
- Minimum Stroke for Auto Switch Mounting
- Operating Range
- Auto Switch Mounting Brackets/Part Nos.

Cylinder Model with Auto Switch Magnet

If a cylinder with an auto switch magnet and without an auto switch is required, there is no need to enter the symbol for the auto switch.
(Example) CDQ2B40R-50DMZ

Applicable Auto Switches / Refer to the **Web Catalog** for further information on auto switches.

Type	Special function	Electrical entry	Indicator light	Wiring (Output)	Load voltage DC		Load voltage AC	Auto switch model Perpendicular	Auto switch model In-line	Lead wire length [m] 0.5 (Nil)	1 (M)	3 (L)	5 (Z)	Pre-wired connector	Applicable load	
Solid state auto switch	Water resistant (2-color indicator)	Grommet	Yes	3-wire (NPN)	24 V	5 V, 12 V	—	M9NAV	M9NA	○	○	●	○	○	IC circuit	Relay, PLC
				3-wire (PNP)				M9PAV	M9PA	○	○	●	○	○		
				2-wire		12 V		M9BAV	M9BA	○	○	●	○	○	—	

∗ Lead wire length symbols: 0.5 m ····· Nil (Example) M9BA
1 m ····· M (Example) M9BAM
3 m ····· L (Example) M9BAL
5 m ····· Z (Example) M9BAZ

∗ Solid state auto switches marked with a "○" are produced upon receipt of order.

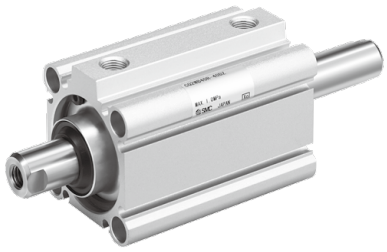

Symbol

Without cushion

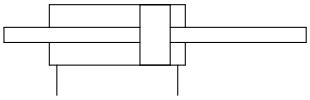

Specifications

Bore size [mm]	40	50	63	80	100
Action	Double acting, Double rod				
Fluid	Air				
Proof pressure	1.5 MPa				
Maximum operating pressure	1.0 MPa				
Minimum operating pressure	0.08 MPa				
Ambient and fluid temperatures	Without auto switch magnet: –10 to 70°C With auto switch magnet: –10 to 60°C (No freezing)				
Lubrication	Not required (Non-lube)				
Piston speed	50 to 500 mm/s				
Cushion	None				
Allowable kinetic energy [J]	0.26	0.46	0.77	1.36	2.27
Stroke length tolerance	$^{+1.0\ mm}_{0}$				

Standard Strokes

[mm]

Bore size	Standard stroke
40	5, 10, 15, 20, 25, 30, 35, 40, 45, 50, 75, 100
50, 63, 80, 100	10, 15, 20, 25, 30, 35, 40, 45, 50, 75, 100

Made to Order

Made to Order Common Specifications
(For details ⇨ p. 167 to 196)

Symbol	Specifications
-XB10	Intermediate stroke (Exclusive body type)
-XC6	Piston rod/Retaining ring/Rod end nut material: Stainless steel
-XC6A∗1	Piston rod/Rod end nut/Cover holding bolt material: Stainless steel
-XC85	Grease for food processing equipment

∗1 -XC6A: ø20, ø25, ø32 of the C□Q2□ R/V only

∗ Stainless steel accessories are also available.
For details ⇨ p. 34

Manufacturing of Intermediate Strokes

Type	A spacer is installed in the standard stroke body.	
Part no.	Refer to “How to Order” for the standard model number. (p. 116)	
Description	Strokes in 1 mm increments are available by installing a spacer in the standard stroke cylinder.	
Stroke range	Bore size	Stroke range
	40 to 100	1 to 99
Example	Part no.: CQ2WB50R-57DZ CQ2WB50R-75DZ with 18 mm width spacer inside The B dimension is 115.5 mm.	

Mounting Bracket Part Nos.

Bore size [mm]	Foot∗1	Compact foot∗1	Flange
40	CQ-L040	CQ-LC040	CQ-F040
50	CQ-L050	CQ-LC050	CQ-F050
63	CQ-L063	CQ-LC063	CQ-F063
80	CQ-L080	CQ-LC080	CQ-F080
100	CQ-L100	CQ-LC100	CQ-F100

∗1 When ordering foot and compact foot brackets, order 2 pieces per cylinder.
∗ Parts included with each type of bracket are as follows.
Foot, Compact foot, Flange: Body mounting bolts
∗ Foot, compact foot, flange brackets, etc., cannot be retrofitted for through-hole mounting (B).

⚠ Precautions

Refer to pages 197 to 199 before handling the products.

Dimensions of Each Mounting Bracket

The dimensions of each mounting bracket are the same as those of the standard type, double acting, double rod (except the configuration of the piston rod). Refer to pages 48 to 50.

Theoretical Output

[N]

Bore size [mm]	Operating pressure [MPa]		
	0.3	0.5	0.7
40	317	528	739
50	495	825	1150
63	841	1400	1960
80	1360	2270	3170
100	2140	3570	5000

Weight

Without Auto Switch Magnet

[g]

Bore size \ Stroke	5	10	15	20	25	30	35	40	45	50	75	100
ø40	357	387	416	446	475	505	534	564	594	624	855	1004
ø50	—	645	692	737	782	829	874	918	965	1010	1343	1572
ø63	—	786	837	886	935	986	1035	1084	1135	1184	1555	1804
ø80	—	1447	1526	1604	1682	1761	1839	1917	1996	2074	2674	3066
ø100	—	2464	2572	2680	2787	2896	3003	3111	3219	3326	4156	4695

With Auto Switch Magnet

[g]

Bore size \ Stroke	5	10	15	20	25	30	35	40	45	50	75	100
ø40	452	482	510	540	569	599	629	659	689	719	867	1016
ø50	—	764	810	856	901	946	992	1037	1084	1129	1357	1586
ø63	—	930	980	1030	1079	1129	1179	1228	1279	1328	1577	1826
ø80	—	1680	1757	1836	1915	1992	2071	2150	2227	2306	2697	3089
ø100	—	2791	2899	3008	3114	3222	3330	3438	3546	3653	4191	4730

Additional Weight

[g]

Bore size [mm]		**40**	**50**	**63**	**80**	**100**
Both ends tapped		6	6	19	45	45
Rod end male thread	Male thread	54	106	106	240	350
	Nut	34	64	64	98	232
Foot (Including mounting bolts)		122	194	272	550	912
Compact foot (Including mounting bolts)		93	148	210	454	707
Flange (Including mounting bolts)		214	373	559	1056	1365

Calculation: (Example) **CQ2WF40R-20DMZ**
- Basic weight: CQ2WB40R-20DZ ····· 446 g
- Additional weight: Both ends tapped ····· 6 g
  Rod end male thread ·····88 g
  Flange ····· 214 g
  754 g

Add each weight of auto switches when auto switches are mounted.

Through-hole Type Mounting Bolt for the CQ2W: Without Auto Switch Magnet

Mounting bolt for the through-hole mounting of the CQ2WB is available as an option.
Refer to the following for ordering procedures.
Order the actual number of bolts that will be used.

Example) CQ-M5 x 45L 2 pcs.

Type: Hexagon socket head cap screw
Material: Chromium molybdenum steel
Surface treatment: Zinc chromated

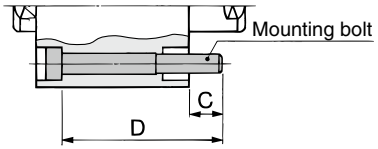

Cylinder model	C	D	Mounting bolt part no.
CQ2WB40R/V-5DZ	7	45	CQ-M5 x 45L
-10DZ		50	x 50L
-15DZ		55	x 55L
-20DZ		60	x 60L
-25DZ		65	x 65L
-30DZ		70	x 70L
-35DZ		75	x 75L
-40DZ		80	x 80L
-45DZ		85	x 85L
-50DZ		90	x 90L
-75DZ		125	x 125L
-100DZ		150	x 150L
CQ2WB50R/V-10DZ	12.5	55	CQ-M6 x 55L
-15DZ		60	x 60L
-20DZ		65	x 65L
-25DZ		70	x 70L
-30DZ		75	x 75L
-35DZ		80	x 80L
-40DZ		85	x 85L
-45DZ		90	x 90L
-50DZ		95	x 95L
-75DZ		130	x 130L
-100DZ		155	x 155L

Cylinder model	C	D	Mounting bolt part no.
CQ2WB63R/V-10DZ	13.5	55	CQ-M8 x 55L
-15DZ		60	x 60L
-20DZ		65	x 65L
-25DZ		70	x 70L
-30DZ		75	x 75L
-35DZ		80	x 80L
-40DZ		85	x 85L
-45DZ		90	x 90L
-50DZ		95	x 95L
-75DZ		130	x 130L
-100DZ		155	x 155L
CQ2WB80R/V-10DZ	12.5	60	CQ-M10 x 60L
-15DZ		65	x 65L
-20DZ		70	x 70L
-25DZ		75	x 75L
-30DZ		80	x 80L
-35DZ		85	x 85L
-40DZ		90	x 90L
-45DZ		95	x 95L
-50DZ		100	x 100L
-75DZ		135	x 135L
-100DZ		160	x 160L

Cylinder model	C	D	Mounting bolt part no.
CQ2WB100R/V-10DZ	13	70	CQ-M10 x 70L
-15DZ		75	x 75L
-20DZ		80	x 80L
-25DZ		85	x 85L
-30DZ		90	x 90L
-35DZ		95	x 95L
-40DZ		100	x 100L
-45DZ		105	x 105L
-50DZ		110	x 110L
-75DZ		145	x 145L
-100DZ		170	x 170L

Through-hole Type Mounting Bolt for the CDQ2W: With Auto Switch Magnet

Cylinder model	C	D	Mounting bolt part no.
CDQ2WB40R/V-5DZ	7	55	CQ-M5 x 55L
-10DZ		60	x 60L
-15DZ		65	x 65L
-20DZ		70	x 70L
-25DZ		75	x 75L
-30DZ		80	x 80L
-35DZ		85	x 85L
-40DZ		90	x 90L
-45DZ		95	x 95L
-50DZ		100	x 100L
-75DZ		125	x 125L
-100DZ		150	x 150L
CDQ2WB50R/V-10DZ	12.5	65	CQ-M6 x 65L
-15DZ		70	x 70L
-20DZ		75	x 75L
-25DZ		80	x 80L
-30DZ		85	x 85L
-35DZ		90	x 90L
-40DZ		95	x 95L
-45DZ		100	x 100L
-50DZ		105	x 105L
-75DZ		130	x 130L
-100DZ		155	x 155L

Cylinder model	C	D	Mounting bolt part no.
CDQ2WB63R/V-10DZ	13.5	65	CQ-M8 x 65L
-15DZ		70	x 70L
-20DZ		75	x 75L
-25DZ		80	x 80L
-30DZ		85	x 85L
-35DZ		90	x 90L
-40DZ		95	x 95L
-45DZ		100	x 100L
-50DZ		105	x 105L
-75DZ		130	x 130L
-100DZ		155	x 155L
CDQ2WB80R/V-10DZ	12.5	70	CQ-M10 x 70L
-15DZ		75	x 75L
-20DZ		80	x 80L
-25DZ		85	x 85L
-30DZ		90	x 90L
-35DZ		95	x 95L
-40DZ		100	x 100L
-45DZ		105	x 105L
-50DZ		110	x 110L
-75DZ		135	x 135L
-100DZ		160	x 160L

Cylinder model	C	D	Mounting bolt part no.
CDQ2WB100R/V-10DZ	13	80	CQ-M10 x 80L
-15DZ		85	x 85L
-20DZ		90	x 90L
-25DZ		95	x 95L
-30DZ		100	x 100L
-35DZ		105	x 105L
-40DZ		110	x 110L
-45DZ		115	x 115L
-50DZ		120	x 120L
-75DZ		145	x 145L
-100DZ		170	x 170L

Construction

Without auto switch magnet

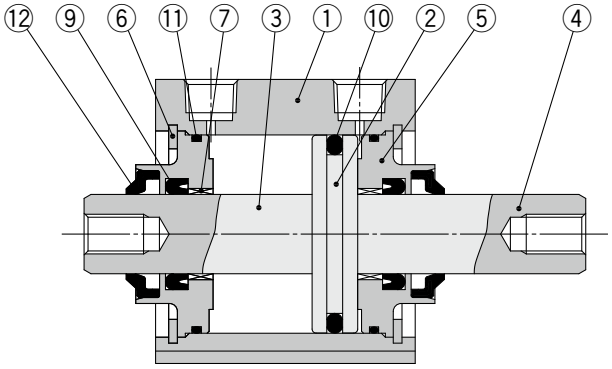

With auto switch magnet

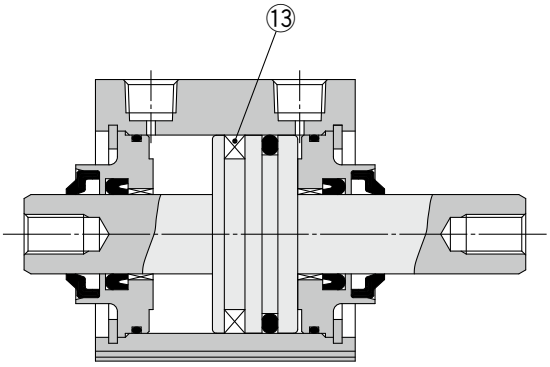

Rod end male thread

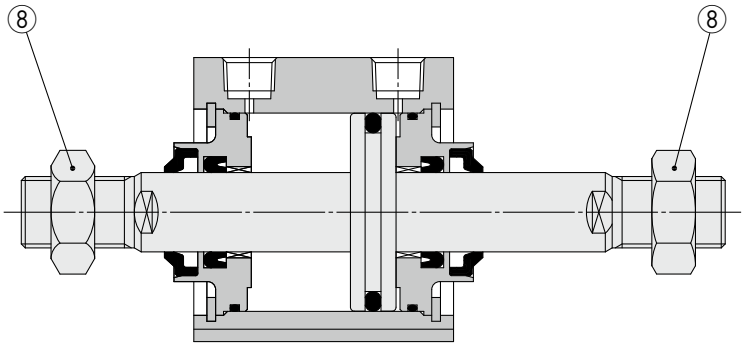

Component Parts

No.	Description	Material	Note
1	**Cylinder tube**	Aluminum alloy	Hard anodized
2	**Piston**	Aluminum alloy	
3	**Piston rod A**	Carbon steel	Hard chrome plating
4	**Piston rod B**	Carbon steel	Hard chrome plating
5	**Collar**	Aluminum alloy	
6	**Retaining ring**	Carbon tool steel	Phosphate coated
7	**Bushing**	Bearing alloy	
8	**Rod end nut**	Carbon steel	Zinc chromated
9	**Rod seal**	R: NBR	
		V: FKM	
10	**Piston seal**	R: NBR	
		V: FKM	
11	**Tube gasket**	R: NBR	
		V: FKM	
12	**Rod scraper**	R: NBR	
		V: FKM	
13	**Magnet**		

∗ R: NBR seal (Nitrile rubber)
V: FKM seal (Fluororubber)

Replacement Parts/Seal Kit

Bore size [mm]	Kit no.		Contents
	R: NBR	V: FKM	
40	CQ2WB40R-PS	CQ2WB40V-PS	Set of nos. ⑨, ⑩, ⑪
50	CQ2WB50R-PS	CQ2WB50V-PS	
63	CQ2WB63R-PS	CQ2WB63V-PS	
80	CQ2WB80R-PS	CQ2WB80V-PS	
100	CQ2WB100R-PS	CQ2WB100V-PS	

· Seal kit includes ⑨, ⑩, ⑪. Order the seal kit based on each bore size.
· A rod scraper cannot be replaced independently. It is press-fitted, so replace it not only with a collar, but also with a collar assembly.
∗ The seal kit does not include a grease pack. Order it separately.
Grease pack part no.: GR-S-010 (10 g)

ø40 to ø100 With/Without Auto Switch Magnet

Through-hole: CⒹQ2WB-R/V

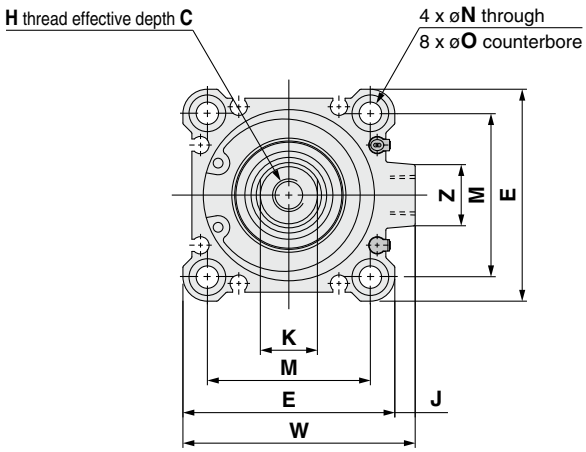

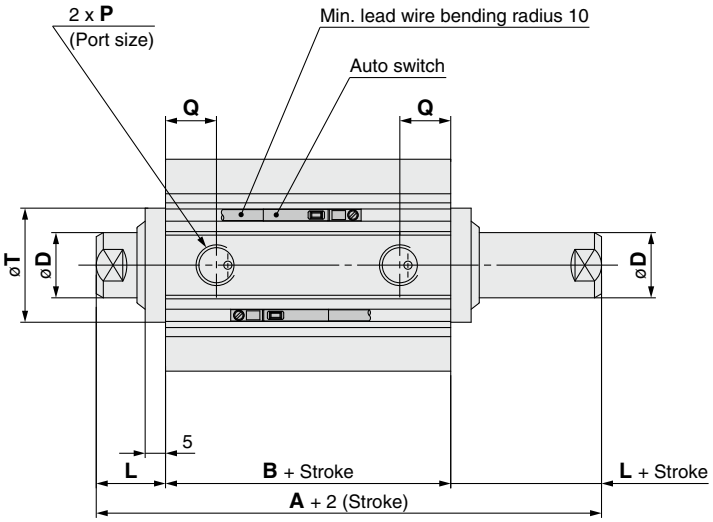

[mm]

Bore size [mm]	Stroke range [mm]	Without auto switch magnet A	Without auto switch magnet B	With auto switch magnet A	With auto switch magnet B	C	D	E	H	J	K	L	M	N	O	P	Q	T	W	Z
40	5 to 50	74	40	84	50	13	16	52	M8 x 1.25	5	14	17	40	5.5	9 depth 7	1/8	12.5	28	57	15
	75,100	84	50																	
50	10 to 50	76.5	40.5	86.5	50.5	15	20	64	M10 x 1.5	7	17	18	50	6.6	11 depth 8	1/4	14	35	71	19
	75,100	86.5	50.5																	
63	10 to 50	78	42	88	52	15	20	77	M10 x 1.5	7	17	18	60	9	14 depth 10.5	1/4	15.5	35	84	19
	75,100	88	52																	
80	10 to 50	91	51	101	61	21	25	98	M16 x 2.0	6	22	20	77	11	17.5 depth 13.5	3/8	18	43	104	25
	75,100	101	61																	
100	10 to 50	104.5	60.5	114.5	70.5	27	30	117	M20 x 2.5	6.5	27	22	94	11	17.5 depth 13.5	3/8	22	59	123.5	25

∗ For details on the rod end nut and accessory brackets ⇨ p. 34 to 36
∗ For the auto switch proper mounting position and mounting height ⇨ p. 149 to 156

Both ends tapped

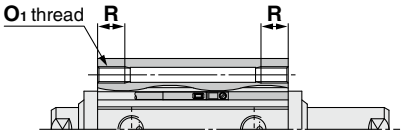

[mm]

Bore size [mm]	O_1	R
40	M6 x 1.0	10
50	M8 x 1.25	14
63	M10 x 1.5	18
80	M12 x 1.75	22
100	M12 x 1.75	22

Rod end male thread

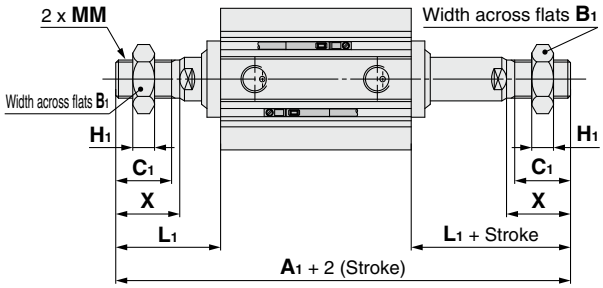

[mm]

Bore size [mm]	Stroke range [mm]	Without auto switch magnet A_1	With auto switch magnet A_1
40	5 to 50	117	127
	75,100	127	
50	10 to 50	127.5	137.5
	75,100	137.5	
63	10 to 50	129	139
	75,100	139	
80	10 to 50	158	168
	75,100	168	
100	10 to 50	167.5	177.5
	75,100	177.5	

Bore size [mm]	B_1	C_1	H_1	L_1	MM	X
40	22	20.5	8	38.5	M14 x 1.5	23.5
50	27	26	11	43.5	M18 x 1.5	28.5
63	27	26	11	43.5	M18 x 1.5	28.5
80	32	32.5	13	53.5	M22 x 1.5	35.5
100	41	32.5	16	53.5	M26 x 1.5	35.5

Dimensions of Each Mounting Bracket

The dimensions of each mounting bracket are the same as those of the standard type, double acting, double rod (except the configuration of the piston rod). Refer to pages 48 to 50.

		With End Lock	Axial Piping		Water Resistant		Non-rotating Rod		Long Stroke	Anti-lateral Load	Large Bore Size		Standard		
Made to Order	**Auto Switch**	Double Acting, Single Rod **CBQ2**	Single Acting, Spring Return/Extend **CQP2**	Double Acting, Single Rod **CQP2**	Double Acting, Double Rod **CQ2W-R/V**	Double Acting, Single Rod **CQ2-R/V**	Double Acting, Double Rod **CQ2KW**	Double Acting, Single Rod **CQ2K**	Double Acting, Single Rod **CQ2**	Double Acting, Single Rod **CQ2□S**	Double Acting, Double Rod **CQ2W**	Double Acting, Single Rod **CQ2**	Single Acting, Spring Return/Extend **CQ2**	Double Acting, Double Rod **CQ2W**	Double Acting, Single Rod **CQ2**

Compact Cylinder: Axial Piping
Double Acting, Single Rod
CQP2 Series
ø12, ø16, ø20, ø25, ø32, ø40, ø50, ø63, ø80, ø100

How to Order

Without auto switch CQP2B ☐ 50 ☐ – 30 D ☐ – ☐

With auto switch CDQP2B ☐ 50 ☐ – 30 D ☐ – M9BW ☐ – ☐

❶ ❷ ❸ ❹ ❺ ❻ ❼ ❽ ❾ ❿

With auto switch magnet
The overall length of the cylinder with an auto switch magnet is longer than that of the cylinder without an auto switch magnet by the length of the built-in magnet. For details, refer to the dimensions of each size.

Axial piping

❶ Mounting

B	Through-hole

∗ A through-hole type mounting bolt is available as an option. For details ⇨ p. 127

❷ Type

Nil	Pneumatic
H	Air-hydro∗1

∗1 The bore sizes available for the air-hydro type are ø20 to ø100.

❸ Bore size

12	12 mm
16	16 mm
20	20 mm
25	25 mm
32	32 mm
40	40 mm
50	50 mm
63	63 mm
80	80 mm
100	100 mm

❹ Port thread type

Nil	M thread	ø12 to ø25
	Rc	ø32 to ø100
TN	NPT	
TF	G	

❺ Cylinder stroke (For details on the minimum stroke for auto switch mounting ⇨ p. 157)

[mm]

Bore size	Standard stroke
12, 16	5, 10, 15, 20, 25, 30
20, 25	5, 10, 15, 20, 25, 30, 35, 40, 45, 50
32, 40	5, 10, 15, 20, 25, 30, 35, 40, 45, 50, 75, 100
50, 63, 80, 100	10, 15, 20, 25, 30, 35, 40, 45, 50, 75, 100

∗ For the manufacturing of intermediate strokes ⇨ p. 125
∗ The bore sizes available for the air-hydro type are ø20 to ø100.

❻ Action

D	Double acting

❼ Body option

Nil	Rod end female thread
C	With rubber bumper∗1
M	Rod end male thread

∗1 The type with a rubber bumper is not selectable for the air-hydro type.
∗ Combined body options "CM" can be selected.

❽ Auto switch

Nil	Without auto switch

∗ For applicable auto switches ⇨ p. 124

❾ Number of auto switches

Nil	2
S	1
n	n

❿ Made to order common specifications

For details ⇨ p. 125

Cylinder Model with Auto Switch Magnet

If a cylinder with an auto switch magnet and without an auto switch is required, there is no need to enter the symbol for the auto switch.
(Example) CDQP2B32-30D

For details on **auto switch mounting** ⇨ p. 149 to 165

- Auto Switch Proper Mounting Position (Detection at stroke end) and Mounting Height
- Minimum Stroke for Auto Switch Mounting
- Operating Range
- Auto Switch Mounting Brackets/Part Nos.

Applicable Auto Switches / Refer to the **Web Catalog** for further information on auto switches.

Type	Special function	Electrical entry	Indicator light	Wiring (Output)	Load voltage DC	Load voltage AC	Auto switch model Perpendicular	Auto switch model In-line	Lead wire length [m] 0.5 (Nil)	1 (M)	3 (L)	5 (Z)	None (N)	Pre-wired connector	Applicable load	
Solid state auto switch	—	Grommet	Yes	3-wire (NPN)	24 V, 5 V, 12 V	—	M9NV	M9N	●	●	●	○	—	○	IC circuit	Relay, PLC
				3-wire (PNP)			M9PV	M9P	●	●	●	○	—	○		
				2-wire	12 V		M9BV	M9B	●	●	●	○	—	○	—	
		Connector					J79C	—	●	—	●	●	●	—		
	Diagnostic indication (2-color indicator)	Grommet		3-wire (NPN)	5 V, 12 V		M9NWV	M9NW	●	●	●	○	—	○	IC circuit	
				3-wire (PNP)			M9PWV	M9PW	●	●	●	○	—	○		
				2-wire	12 V		M9BWV	M9BW	●	●	●	○	—	○	—	
	Water resistant (2-color indicator)			3-wire (NPN)	5 V, 12 V		M9NAV*1	M9NA*1	○	○	●	○	—	○	IC circuit	
				3-wire (PNP)			M9PAV*1	M9PA*1	○	○	●	○	—	○		
				2-wire	12 V		M9BAV*1	M9BA*1	○	○	●	○	—	○	—	
	With diagnostic output (2-color indicator)			4-wire	5 V, 12 V		—	F79F	●	—	●	○	—	○	IC circuit	
	Magnetic field resistant (2-color indicator)			2-wire (Non-polar)	—		—	P4DW	—	—	●	●	—	○	—	
Reed auto switch	—	Grommet	Yes	3-wire (NPN equivalent)	— 5 V	—	A96V	A96	●	●	●	●	—	○	IC circuit	—
				2-wire	—	200 V	A72	A72H	●	—	●	—	—	—	—	Relay, PLC
					24 V 12 V	100 V	A93V	A93	●	●	●	●	—	○*2		
			No		5 V, 12 V	100 V or less	A90V	A90	●	●	●	●	—	○*2	IC circuit	
		Connector	Yes		12 V	—	A73C	—	●	—	●	●	●	—	—	
			No		5 V, 12 V	24 V or less	A80C	—	●	—	●	●	●	—	IC circuit	
	Diagnostic indication (2-color indicator)	Grommet	Yes		—	—	A79W	—	●	—	●	—	—	—	—	

*1 Water-resistant type auto switches can be mounted on the models on page 123, but SMC cannot guarantee water resistance.
Please contact SMC regarding water-resistant types with the model numbers on page 123.
*2 The load voltage used is 24 VDC.

* Lead wire length symbols: 0.5 m ····· Nil (Example) M9NW
1 m ····· M (Example) M9NWM
3 m ····· L (Example) M9NWL
5 m ····· Z (Example) M9NWZ
None ····· N (Example) J79CN

* Auto switches marked with a "○" are produced upon receipt of order.
* The D-P4DW type is only available in sizes ø40 to ø100.
* Only for the D-P4DW type, an auto switch is assembled and shipped with the cylinder.

* There are applicable auto switches other than those listed above. For details ⇨ p. 165

Symbol

Without cushion

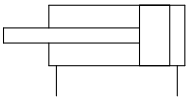

Rubber bumper

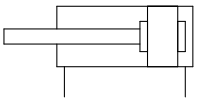

Made to Order Common Specifications
(For details ⇨ p. 167 to 196)

Symbol	Specifications
-XA□	Change of rod end shape
-XB6	Heat-resistant cylinder (–10 to 150°C) w/o auto switch only∗1
-XB7	Cold-resistant cylinder (–40 to 70°C) w/o auto switch only
-XB9	Low-speed cylinder (10 to 50 mm/s)
-XB13	Low-speed cylinder (5 to 50 mm/s)
-XC4	With heavy duty scraper, ø32 to ø100 only
-XC6	Piston rod/Retaining ring/Rod end nut material: Stainless steel
-XC35	With coil scraper
-XC36	With boss on rod end
-XC85	Grease for food processing equipment
-X271	Fluororubber seals∗1

∗1 Excludes the air-hydro type

∗ Stainless steel accessories are also available.
For details ⇨ p. 34

Moisture Control Tube
IDK Series

When operating an actuator with a small bore size and a short stroke at a high frequency, dew condensation (water droplets) may occur inside the piping depending on the conditions.
Simply connecting the moisture control tube to the actuator will prevent dew condensation from occurring. For details, refer to the **Web Catalog**.

⚠ Precautions

Refer to pages 197 and 199 before handling the products.

Specifications

Pneumatic type

Bore size [mm]		12	16	20	25	32	40	50	63	80	100
Action		Double acting, Single rod									
Fluid		Air									
Proof pressure		1.5 MPa									
Maximum operating pressure		1.0 MPa									
Minimum operating pressure		0.07 MPa		0.05 MPa							
Ambient and fluid temperatures		Without auto switch magnet: –10 to 70°C With auto switch magnet: –10 to 60°C (No freezing)									
Lubrication		Not required (Non-lube)									
Piston speed		50 to 500 mm/s									
Cushion		Without cushion or With rubber bumper									
Allowable kinetic energy [J]	**Without cushion**	0.022	0.038	0.055	0.09	0.15	0.26	0.46	0.77	1.36	2.27
	With rubber bumper	0.043	0.075	0.11	0.18	0.29	0.52	0.91	1.54	2.71	4.54
Stroke length tolerance		$^{+1.0}_{0}$ mm∗1									

∗1 Stroke length tolerance does not include the amount of bumper change.

Air-hydro type

Bore size [mm]	20	25	32	40	50	63	80	100
Action	Double acting, Single rod							
Fluid	Turbine oil∗1							
Proof pressure	1.5 MPa							
Maximum operating pressure	1.0 MPa							
Minimum operating pressure	0.18 MPa			0.1 MPa				
Ambient and fluid temperatures	5 to 60°C							
Piston speed	5 to 50 mm/s							
Cushion	None							
Stroke length tolerance	$^{+1.0}_{0}$ mm							

∗1 Actuator Precautions 5 ⇨ Refer to the **Web Catalog**.

Manufacturing of Intermediate Strokes

Type	A spacer is installed in the standard stroke body.	
Part no.	Refer to "How to Order" for the standard model number. (⇨ p. 123)	
Description	Strokes in 1 mm increments are available by installing a spacer in the standard stroke cylinder.	
Stroke range	Bore size	Stroke range
	12, 16	1 to 29
	20, 25	1 to 49
	32 to 100	1 to 99
Example	Part no.: CQP2B50-57D CQP2B50-75D with 18 mm width spacer inside The B dimension is 115.5 mm.	

- Excludes the air-hydro type
- In the case of spacer type, intermediate strokes with bumper for ø40 to ø100, it can be manufactured in 5 mm increments in 5 mm and 55 to 95 mm.

Weight

Without Auto Switch Magnet

[g]

Bore size [mm]	Cylinder stroke [mm]											
	5	10	15	20	25	30	35	40	45	50	75	100
12	32	39	46	53	60	67	—	—	—	—	—	—
16	54	63	72	81	90	98	—	—	—	—	—	—
20	70	84	98	112	126	140	154	168	182	196	—	—
25	102	117	132	147	161	176	191	206	220	235	—	—
32	149	173	199	222	246	270	295	319	343	367	487	607
40	224	258	280	310	336	362	388	414	440	467	602	737
50	—	414	455	496	538	579	620	662	703	744	949	1154
63	—	584	632	679	727	774	822	870	917	965	1205	1445
80	—	1085	1163	1242	1320	1399	1477	1556	1634	1713	2108	2503
100	—	1894	1992	2091	2189	2287	2385	2483	2581	2679	3169	3659

With Auto Switch Magnet

[g]

Bore size [mm]	Cylinder stroke [mm]											
	5	10	15	20	25	30	35	40	45	50	75	100
12	54	62	69	75	82	89	—	—	—	—	—	—
16	91	99	107	115	123	131	—	—	—	—	—	—
20	121	135	147	161	175	188	201	214	228	242	—	—
25	177	190	203	117	230	244	257	270	284	297	—	—
32	217	242	266	290	315	339	363	387	412	436	557	679
40	319	345	371	397	423	449	475	502	528	554	684	814
50	—	546	588	629	670	712	753	794	836	877	1084	1291
63	—	764	812	859	907	955	1002	1050	1098	1145	1384	1622
80	—	1377	1455	1534	1612	1691	1769	1848	1926	2005	2397	2790
100	—	2296	2394	2492	2590	2688	2786	2884	2982	3080	3570	4060

Additional Weight

[g]

Bore size [mm]		12	16	20	25	32	40	50	63	80	100
Rod end male thread	Male thread	1.5	3	6	12	26	27	53	53	120	175
	Nut	1	2	4	8	17	17	32	32	49	116
With rubber bumper		0	–1	–2	–3	–3	–7	–9	–18	–31	–56

Calculation: (Example) **CDQP2B32-20DCM**
- Basic weight: CDQP2B32-20D ····· 290 g
- Additional weight: Rod end male thread ····· 43 g
  With rubber bumper ····· –3 g
  330 g

Add each weight of auto switches and mounting brackets when auto switches are mounted.

Auto Switch Mounting Bracket Weight

Mounting bracket part no.	Applicable bore size	Weight [g]
BQ-1	ø12 to ø25	1.5
BQ-2	ø32 to ø100	1.5
BQ2-012	ø12 to ø100	5

Theoretical Output

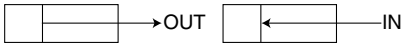

[N]

Bore size [mm]	Operating direction	Operating pressure [MPa]		
		0.3	0.5	0.7
12	IN	25	42	59
	OUT	34	57	79
16	IN	45	75	106
	OUT	60	101	141
20	IN	71	118	165
	OUT	94	157	220
25	IN	113	189	264
	OUT	147	245	344
32	IN	181	302	422
	OUT	241	402	563
40	IN	317	528	739
	OUT	377	628	880
50	IN	495	825	1150
	OUT	589	982	1370
63	IN	841	1400	1960
	OUT	935	1560	2180
80	IN	1360	2270	3170
	OUT	1510	2510	3520
100	IN	2140	3570	5000
	OUT	2360	3930	5500

Through-hole Type Mounting Bolt for the CQP2: Without Auto Switch Magnet

Mounting bolt for the through-hole mounting of the CQP2B is available as an option.
Refer to the following for ordering procedures.
Order the actual number of bolts that will be used.

Example) CQ-M3 x 25L 2 pcs.

Type: Hexagon socket head cap screw
Material: Chromium molybdenum steel
Surface treatment: Zinc chromated

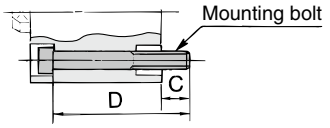

Cylinder model	C	D	Mounting bolt part no.
CQP2B12-5D	6.5	25	CQ-M3 x 25L
-10D		30	x 30L
-15D		35	x 35L
-20D		40	x 40L
-25D		45	x 45L
-30D		50	x 50L
CQP2B16-5D	5	25	CQ-M3 x 25L
-10D		30	x 30L
-15D		35	x 35L
-20D		40	x 40L
-25D		45	x 45L
-30D		50	x 50L
CQP2B20-5D	7.5	25	CQ-M5 x 25L
-10D		30	x 30L
-15D		35	x 35L
-20D		40	x 40L
-25D		45	x 45L
-30D		50	x 50L
-35D		55	x 55L
-40D		60	x 60L
-45D		65	x 65L
-50D		70	x 70L
CQP2B25-5D	9.5	30	CQ-M5 x 30L
-10D		35	x 35L
-15D		40	x 40L
-20D		45	x 45L
-25D		50	x 50L
-30D		55	x 55L
-35D		60	x 60L
-40D		65	x 65L
-45D		70	x 70L
-50D		75	x 75L

Cylinder model	C	D	Mounting bolt part no.
CQP2B32-5D	9	30	CQ-M5 x 30L
-10D		35	x 35L
-15D		40	x 40L
-20D		45	x 45L
-25D		50	x 50L
-30D		55	x 55L
-35D		60	x 60L
-40D		65	x 65L
-45D		70	x 70L
-50D		75	x 75L
-75D		110	x 110L
-100D		135	x 135L
CQP2B40-5D	7.5	35	CQ-M5 x 35L
-10D		40	x 40L
-15D		45	x 45L
-20D		50	x 50L
-25D		55	x 55L
-30D		60	x 60L
-35D		65	x 65L
-40D		70	x 70L
-45D		75	x 75L
-50D		80	x 80L
-75D		115	x 115L
-100D		140	x 140L
CQP2B50-10D	12.5	45	CQ-M6 x 45L
-15D		50	x 50L
-20D		55	x 55L
-25D		60	x 60L
-30D		65	x 65L
-35D		70	x 70L
-40D		75	x 75L
-45D		80	x 80L
-50D		85	x 85L
-75D		120	x 120L
-100D		145	x 145L

Cylinder model	C	D	Mounting bolt part no.
CQP2B63-10D	14.5	50	CQ-M8 x 50L
-15D		55	x 55L
-20D		60	x 60L
-25D		65	x 65L
-30D		70	x 70L
-35D		75	x 75L
-40D		80	x 80L
-45D		85	x 85L
-50D		90	x 90L
-75D		125	x 125L
-100D		150	x 150L
CQP2B80-10D	15	55	CQ-M10 x 55L
-15D		60	x 60L
-20D		65	x 65L
-25D		70	x 70L
-30D		75	x 75L
-35D		80	x 80L
-40D		85	x 85L
-45D		90	x 90L
-50D		95	x 95L
-75D		130	x 130L
-100D		155	x 155L
CQP2B100-10D	15.5	65	CQ-M10 x 65L
-15D		70	x 70L
-20D		75	x 75L
-25D		80	x 80L
-30D		85	x 85L
-35D		90	x 90L
-40D		95	x 95L
-45D		100	x 100L
-50D		105	x 105L
-75D		140	x 140L
-100D		165	x 165L

Through-hole Type Mounting Bolt for the CDQP2: With Auto Switch Magnet

Cylinder model	C	D	Mounting bolt part no.
CDQP2B12-5D	5.5	35	CQ-M3 x 35L
-10D		40	x 40L
-15D		45	x 45L
-20D		50	x 50L
-25D		55	x 55L
-30D		60	x 60L
CDQP2B16-5D	8	40	CQ-M3 x 40L
-10D		45	x 45L
-15D		50	x 50L
-20D		55	x 55L
-25D		60	x 60L
-30D		65	x 65L
CDQP2B20-5D	10.5	40	CQ-M5 x 40L
-10D		45	x 45L
-15D		50	x 50L
-20D		55	x 55L
-25D		60	x 60L
-30D		65	x 65L
-35D		70	x 70L
-40D		75	x 75L
-45D		80	x 80L
-50D		85	x 85L
CDQP2B25-5D	9.5	40	CQ-M5 x 40L
-10D		45	x 45L
-15D		50	x 50L
-20D		55	x 55L
-25D		60	x 60L
-30D		65	x 65L
-35D		70	x 70L
-40D		75	x 75L
-45D		80	x 80L
-50D		85	x 85L

Cylinder model	C	D	Mounting bolt part no.
CDQP2B32-5D	9	40	CQ-M5 x 40L
-10D		45	x 45L
-15D		50	x 50L
-20D		55	x 55L
-25D		60	x 60L
-30D		65	x 65L
-35D		70	x 70L
-40D		75	x 75L
-45D		80	x 80L
-50D		85	x 85L
-75D		110	x 110L
-100D		135	x 135L
CDQP2B40-5D	7.5	45	CQ-M5 x 45L
-10D		50	x 50L
-15D		55	x 55L
-20D		60	x 60L
-25D		65	x 65L
-30D		70	x 70L
-35D		75	x 75L
-40D		80	x 80L
-45D		85	x 85L
-50D		90	x 90L
-75D		115	x 115L
-100D		140	x 140L
CDQP2B50-10D	12.5	55	CQ-M6 x 55L
-15D		60	x 60L
-20D		65	x 65L
-25D		70	x 70L
-30D		75	x 75L
-35D		80	x 80L
-40D		85	x 85L
-45D		90	x 90L
-50D		95	x 95L
-75D		120	x 120L
-100D		145	x 145L

Cylinder model	C	D	Mounting bolt part no.
CDQP2B63-10D	14.5	60	CQ-M8 x 60L
-15D		65	x 65L
-20D		70	x 70L
-25D		75	x 75L
-30D		80	x 80L
-35D		85	x 85L
-40D		90	x 90L
-45D		95	x 95L
-50D		100	x 100L
-75D		125	x 125L
-100D		150	x 150L
CDQP2B80-10D	15	65	CQ-M10 x 65L
-15D		70	x 70L
-20D		75	x 75L
-25D		80	x 80L
-30D		85	x 85L
-35D		90	x 90L
-40D		95	x 95L
-45D		100	x 100L
-50D		105	x 105L
-75D		130	x 130L
-100D		155	x 155L
CDQP2B100-10D	15.5	75	CQ-M10 x 75L
-15D		80	x 80L
-20D		85	x 85L
-25D		90	x 90L
-30D		95	x 95L
-35D		100	x 100L
-40D		105	x 105L
-45D		110	x 110L
-50D		115	x 115L
-75D		140	x 140L
-100D		165	x 165L

Construction

Without auto switch magnet

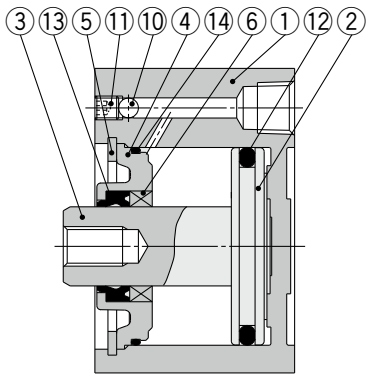

A-A section (Port on rod end)

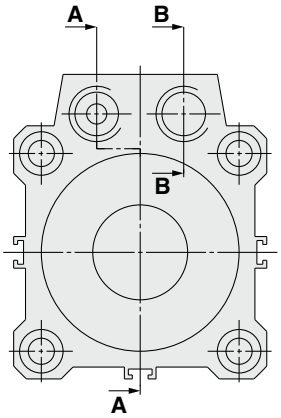

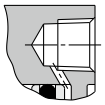

B-B section
(Port on head end)

With auto switch magnet

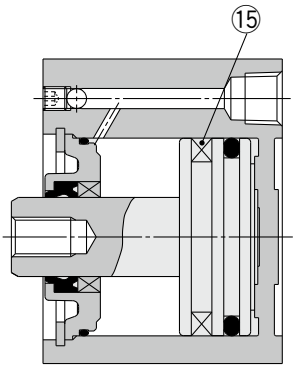

Rod end male thread

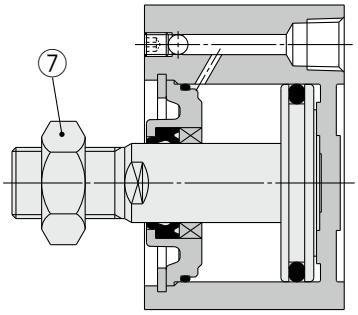

With rubber bumper

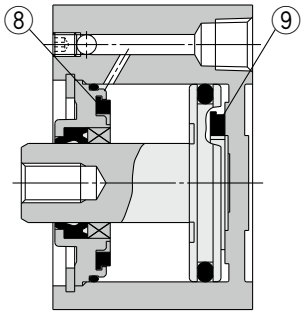

Component Parts

No.	Description	Material	Note
1	**Cylinder tube**	Aluminum alloy	Hard anodized
2	**Piston**	Aluminum alloy	
3	**Piston rod**	Stainless steel	ø12 to ø25
		Carbon steel	ø32 to ø100, Hard chrome plating
4	**Collar**	Aluminum alloy	ø12 to ø40, Anodized
		Aluminum alloy casted	ø50 to ø100, Chromated, Painted
5	**Retaining ring**	Carbon tool steel	Phosphate coated
6	**Bushing**	Bearing alloy	ø50 to ø100
7	**Rod end nut**	Carbon steel	Zinc chromated
8	**Bumper A**	Urethane	
9	**Bumper B**	Urethane	
10	**Steel ball**	Carbon steel	
11	**Hexagon socket head set screw**	Alloy steel	Zinc chromated
12	**Piston seal**	NBR	
13	**Rod seal**	NBR	
14	**Gasket**	NBR	
15	**Magnet**	—	

Replacement Parts/Seal Kit

Bore size [mm]	Kit no.		Contents
	Pneumatic type (Non-lube)	Air-hydro type	
12	CQ2B12-PS	—	Set of nos. ⑫, ⑬, ⑭
16	CQ2B16-PS	—	
20	CQ2B20-PS	CQ2BH20-PS	
25	CQ2B25-PS	CQ2BH25-PS	
32	CQ2B32-PS	CQ2BH32-PS	
40	CQ2B40-PS	CQ2BH40-PS	
50	CQ2B50-PS	CQ2BH50-PS	
63	CQ2B63-PS	CQ2BH63-PS	
80	CQ2B80-PS	CQ2BH80-PS	
100	CQ2B100-PS	CQ2BH100-PS	

∗ Seal kit includes ⑫, ⑬, ⑭. Order the seal kit based on each bore size.
∗ The seal kit does not include a grease pack. Order it separately.
Grease pack part no.: GR-S-010 (10 g)

Bore Size

ø12 to ø100 With/Without Auto Switch Magnet

Through-hole: C[D]QP2B

ø12 to ø25

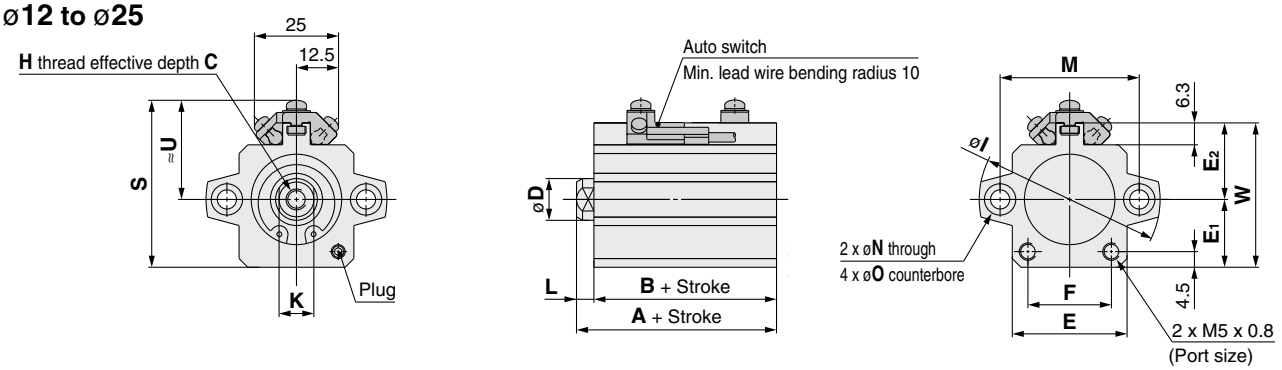

[mm]

Bore size [mm]	Stroke range [mm]	Without auto switch magnet A	Without auto switch magnet B	With auto switch magnet A	With auto switch magnet B	With auto switch magnet S	With auto switch magnet U	C	D	E	E_1	E_2	F	H	I	K	L	M	N	O	W
12	5 to 30	20.5	17	31.5	28	33.5	20.5	6	6	23	13	14	14	M3 x 0.5	32	5	3.5	22	3.5	6.5 depth 3.5	27
16	5 to 30	22	18.5	34	30.5	38.5	23.5	8	8	26	15	17	17	M4 x 0.7	38	6	3.5	28	3.5	6.5 depth 3.5	32
20	5 to 50	24	19.5	36	31.5	42.5	25.5	7	10	30	17	19	21	M5 x 0.8	47	8	4.5	36	5.5	9 depth 7	36
25	5 to 50	27.5	22.5	37.5	32.5	48	28.5	12	12	33	19.5	22	24	M6 x 1.0	52	10	5	40	5.5	9 depth 7	41.5

∗ For details on the rod end nut and accessory brackets ⇨ p. 34 to 36
∗ The external dimensions with rubber bumper are same as those of the standard, as shown above.
∗ For the auto switch proper mounting position and mounting height ⇨ p. 149 to 156

ø32 to ø100

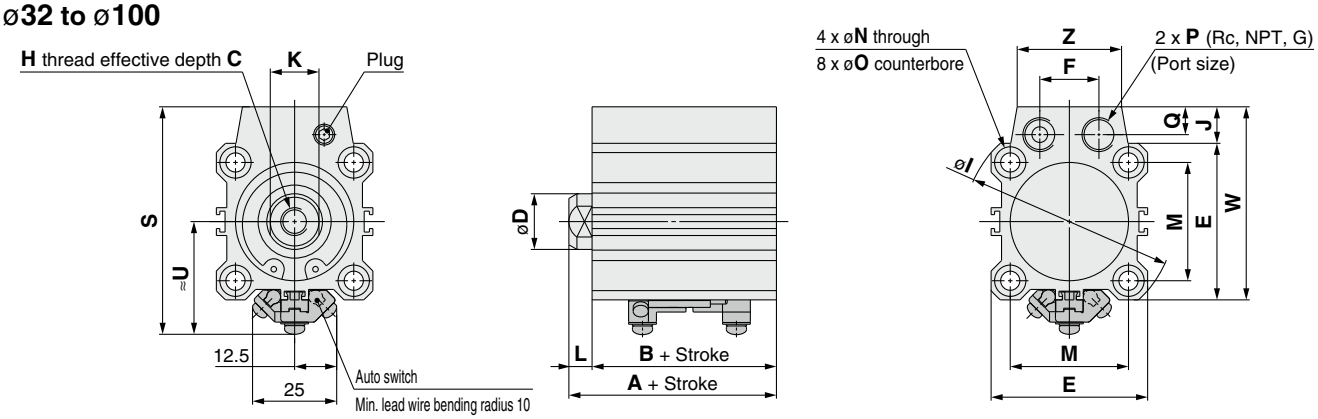

[mm]

Bore size [mm]	Stroke range [mm]	Without auto switch magnet A	Without auto switch magnet B	With auto switch magnet A	With auto switch magnet B	With auto switch magnet S	With auto switch magnet U	C	D	E	F	H	I	J	K	L	M	N	O	P	Q	W	Z
32	5 to 50	30	23	40	33	65.5	32.5	13	16	45	17	M8 x 1.25	60	10.5	14	7	34	5.5	9 depth 7	1/8	8	55.5	30
	75,100	40	33																				
40	5 to 50	36.5	29.5	46.5	39.5	72	36	13	16	52	17	M8 x 1.25	69	10	14	7	40	5.5	9 depth 7	1/8	8	62	30
	75,100	46.5	39.5																				
50	10 to 50	38.5	30.5	48.5	40.5	87	42	15	20	64	22	M10 x 1.5	86	13	17	8	50	6.6	11 depth 8	1/4	10	77	39
	75,100	48.5	40.5																				
63	10 to 50	44	36	54	46	100	48.5	15	20	77	22	M10 x 1.5	103	13	17	8	60	9	14 depth 10.5	1/4	10	90	39
	75,100	54	46																				
80	10 to 50	53.5	43.5	63.5	53.5	123.5	58.5	21	25	98	26	M16 x 2.0	132	16	22	10	77	11	17.5 depth 13.5	3/8	12.5	114	48
	75,100	63.5	53.5																				
100	10 to 50	65	53	75	63	144.5	68.5	27	30	117	26	M20 x 2.5	156	17.5	27	12	94	11	17.5 depth 13.5	3/8	12.5	134.5	48
	75,100	75	63																				

∗ For details on the rod end nut and accessory brackets ⇨ p. 34 to 36
∗ The external dimensions with rubber bumper are same as those of the standard, as shown above.
∗ For the auto switch proper mounting position and mounting height ⇨ p. 149 to 156

Rod end male thread

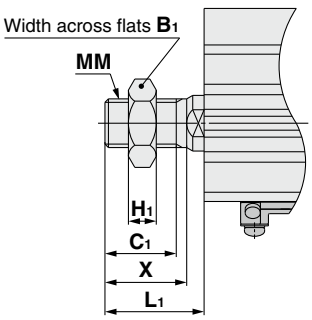

[mm]

Bore size [mm]	B_1	C_1	H_1	L_1	MM	X
12	8	9	4	14	M5 x 0.8	10.5
16	10	10	5	15.5	M6 x 1.0	12
20	13	12	5	18.5	M8 x 1.25	14
25	17	15	6	22.5	M10 x 1.25	17.5
32	22	20.5	8	28.5	M14 x 1.5	23.5
40	22	20.5	8	28.5	M14 x 1.5	23.5
50	27	26	11	33.5	M18 x 1.5	28.5
63	27	26	11	33.5	M18 x 1.5	28.5
80	32	32.5	13	43.5	M22 x 1.5	35.5
100	41	32.5	16	43.5	M26 x 1.5	35.5

Compact Cylinder: Axial Piping
Single Acting, Single Rod
CQP2 Series
ø12, ø16, ø20, ø25, ø32, ø40, ø50

How to Order

Without auto switch CQP2 B 50 ☐ – 10 T ☐ – ☐

With auto switch CDQP2 B 50 ☐ – 10 T ☐ – M9BW ☐ – ☐

❶ ❷ ❸ ❹ ❺ ❻ ❼ ❽ ❾

With auto switch magnet
The overall length of the cylinder with an auto switch magnet is longer than that of the cylinder without an auto switch magnet by the length of the built-in magnet. For details, refer to the dimensions of each size.

Axial piping

❶ Mounting

B	Through-hole

∗ A through-hole type mounting bolt is available as an option. For details ⇨ p. 134

❷ Bore size

12	12 mm	32	32 mm
16	16 mm	40	40 mm
20	20 mm	50	50 mm
25	25 mm		

❸ Port thread type

Nil	M thread	ø12 to ø25
	Rc	ø32 to ø50
TN	NPT	
TF	G	

❹ Cylinder stroke

(For details on the minimum stroke for auto switch mounting ⇨ p. 157) [mm]

Bore size	Standard stroke
12, 16, 20, 25, 32, 40	5, 10
50	10, 20

∗ For the manufacturing of intermediate strokes ⇨ p. 131

❺ Action

S	Single acting, Spring return
T	Single acting, Spring extend

❻ Body option

Nil	Rod end female thread
M	Rod end male thread

❼ Auto switch

Nil	Without auto switch

∗ For applicable auto switches, refer to the table below.

❽ Number of auto switches

Nil	2
S	1
n	n

❾ Made to order common specifications

For details ⇨ p. 131

Cylinder Model with Auto Switch Magnet

If a cylinder with an auto switch magnet and without an auto switch is required, there is no need to enter the symbol for the auto switch.
(Example) CDQP2B32-10S

For details on **auto switch mounting** ⇨ p. 149 to 165

- Auto Switch Proper Mounting Position (Detection at stroke end) and Mounting Height
- Minimum Stroke for Auto Switch Mounting
- Operating Range
- Auto Switch Mounting Brackets/Part Nos.

Applicable Auto Switches / Refer to the **Web Catalog** for further information on auto switches.

Type	Special function	Electrical entry	Indicator light	Wiring (Output)	Load voltage DC	Load voltage AC	Auto switch model Perpendicular	Auto switch model In-line	Lead wire length [m] 0.5 (Nil)	1 (M)	3 (L)	5 (Z)	None (N)	Pre-wired connector	Applicable load	
Solid state auto switch	—	Grommet	Yes	3-wire (NPN)	24 V	5 V, 12 V	—	M9NV	M9N	●	●	●	○	—	○	IC circuit	Relay, PLC
				3-wire (PNP)				M9PV	M9P	●	●	●	○	—	○	
				2-wire		12 V		M9BV	M9B	●	●	●	○	—	○	—
		Connector						J79C	—	●	—	●	●	●	—	
	Diagnostic indication (2-color indicator)	Grommet		3-wire (NPN)		5 V, 12 V		M9NWV	M9NW	●	●	●	○	—	○	IC circuit
				3-wire (PNP)				M9PWV	M9PW	●	●	●	○	—	○	
				2-wire		12 V		M9BWV	M9BW	●	●	●	○	—	○	—
	Water resistant (2-color indicator)			3-wire (NPN)		5 V, 12 V		M9NAV*1	M9NA*1	○	○	●	○	—	○	IC circuit
				3-wire (PNP)				M9PAV*1	M9PA*1	○	○	●	○	—	○	
				2-wire		12 V		M9BAV*1	M9BA*1	○	○	●	○	—	○	—
	With diagnostic output (2-color indicator)			4-wire		5 V, 12 V		—	F79F	●	—	●	○	—	○	IC circuit
Reed auto switch	—	Grommet	Yes	3-wire (NPN equivalent)	—	5 V	—	A96V	A96	●	●	●	●	—	○	IC circuit	—
				2-wire		—	200 V	A72	A72H	●	—	●	—	—	—	—	Relay, PLC
					24 V	12 V	100 V	A93V	A93	●	●	●	●	—	○*2	
			No			5 V, 12 V	100 V or less	A90V	A90	●	●	●	●	—	○*2	IC circuit
		Connector	Yes			12 V	—	A73C	—	●	—	●	●	●	—	—
			No			5 V, 12 V	24 V or less	A80C	—	●	—	●	●	●	—	IC circuit
	Diagnostic indication (2-color indicator)	Grommet	Yes			—	–	A79W	—	●	—	●	—	—	—	—

∗1 Water-resistant type auto switches can be mounted on the above models, but SMC cannot guarantee water resistance. Please contact SMC regarding water-resistant types with the above model numbers.
∗2 The load voltage used is 24 VDC.

∗ Lead wire length symbols: 0.5 m ····· Nil (Example) M9NW
1 m ····· M (Example) M9NWM
3 m ····· L (Example) M9NWL
5 m ····· Z (Example) M9NWZ
None ····· N (Example) J79CN

∗ Auto switches marked with a "○" are produced upon receipt of order.

∗ There are applicable auto switches other than those listed above. For details ⇨ p. 165

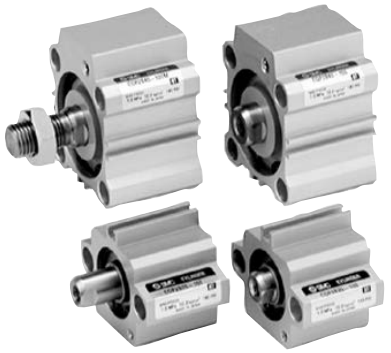

Symbol

Spring return

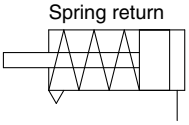

Spring extend

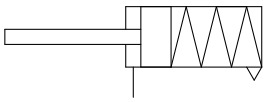

Specifications

Bore size [mm]	12	16	20	25	32	40	50
Action	Double acting, Single rod						
Fluid	Air						
Proof pressure	1.5 MPa						
Maximum operating pressure	1.0 MPa						
Minimum operating pressure [MPa]	0.25	0.25	0.18	0.18	0.17	0.15	0.13
Ambient and fluid temperatures	Without auto switch magnet: –10 to 70°C With auto switch magnet: –10 to 60°C (No freezing)						
Lubrication	Not required (Non-lube)						
Piston speed	50 to 500 mm/s						
Cushion	None						
Allowable kinetic energy [J]	0.022	0.038	0.055	0.09	0.15	0.26	0.46
Stroke length tolerance	$^{+1.0\ mm}_{0}$						

Manufacturing of Intermediate Strokes
(Except single acting, spring return)

Type	A spacer is installed in the standard stroke body.	
Part no.	Refer to "How to Order" for the standard model number. (⇨ p. 130)	
Description	Strokes in 1 mm increments are available by installing a spacer in the standard stroke cylinder.	
Stroke range	Bore size	Stroke range
	12 to 40	1 to 9
	50	1 to 19
Example	Part no.: CQP2B20-3T CQP2B20-5T with 2 mm width spacer inside The B dimension is 24.5 mm.	

Made to Order

Made to Order Common Specifications
(For details ⇨ p. 167 to 196)

Symbol	Specifications
-XA□	Change of rod end shape
-XC6	Piston rod/Retaining ring/Rod end nut material: Stainless steel
-XC36	With boss on rod end
-XC85	Grease for food processing equipment
-X271	Fluororubber seals

∗ Stainless steel accessories are also available. For details ⇨ p. 34

Moisture Control Tube
IDK Series

When operating an actuator with a small bore size and a short stroke at a high frequency, dew condensation (water droplets) may occur inside the piping depending on the conditions.
Simply connecting the moisture control tube to the actuator will prevent dew condensation from occurring. For details, refer to the **Web Catalog**.

⚠ Precautions

Refer to pages 197 and 199 before handling the products.

Theoretical Output

Single Acting, Spring Return

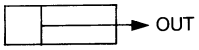

[N]

Bore size [mm]	Operating direction	Operating pressure [MPa]		
		0.3	0.5	0.7
12	OUT	21	44	66
16		45	86	126
20		79	142	205
25		126	224	323
32		211	372	533
40		338	589	841
50		535	928	1316

Single Acting, Spring Extend

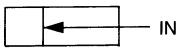

[N]

Bore size [mm]	Operating direction	Operating pressure [MPa]		
		0.3	0.5	0.7
12	IN	14	31	48
16		24	54	85
20		44	91	138
25		84	160	235
32		152	273	393
40		288	499	710
50		412	742	1072

Spring Force

Single Acting, Spring Return

[N]

Bore size [mm]	Stroke [mm]	Spring reaction force [N]	
		Second	First
12	5	13	8.6
	10	13	3.9
16	5	15	10.3
	10	15	5.9
20	5	15	10
	10	15	5.9
25	5	20	16
	10	20	11
32	5	30	23
	10	30	16
40	5	30	13
	10	39	21
50	10	50	30
	20	54	24

Single Acting, Spring Extend

[N]

Bore size [mm]	Stroke [mm]	Spring reaction force [N]	
		Second	First
12	5	11	2.9
	10	9.7	2.8
16	5	20	3.9
	10	20	3.9
20	5	27	5.3
	10	27	5.9
25	5	29	9.8
	10	29	9.8
32	5	29	20
	10	29	20
40	5	29	20
	10	29	20
50	10	83	24
	20	83	24

Single acting, Spring return

- First spring state

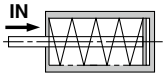

When spring is set in cylinder

- Second spring state

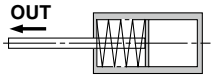

When spring is compressed with air

Single acting, Spring extend

- First spring state

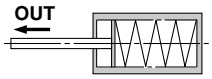

When spring is set in cylinder

- Second spring state

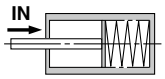

When spring is compressed with air

Weight

Without Auto Switch Magnet

Spring Return [g]

Bore size [mm]	Cylinder stroke [mm]		
	5	10	20
12	33	40	—
16	55	64	—
20	68	83	—
25	103	118	—
32	149	173	—
40	236	262	—
50	—	426	691

Spring Extend [g]

Bore size [mm]	Cylinder stroke [mm]		
	5	10	20
12	33	40	—
16	55	64	—
20	73	87	—
25	109	124	—
32	160	180	—
40	262	284	—
50	—	468	540

With Auto Switch Magnet

Spring Return [g]

Bore size [mm]	Cylinder stroke [mm]		
	5	10	20
12	55	63	—
16	92	100	—
20	121	135	—
25	178	191	—
32	217	242	—
40	323	349	—
50	—	558	641

Spring Extend [g]

Bore size [mm]	Cylinder stroke [mm]		
	5	10	20
12	61	69	—
16	92	100	—
20	126	140	—
25	184	197	—
32	228	253	—
40	349	375	—
50	—	600	683

Additional Weight [g]

Bore size [mm]		**12**	**16**	**20**	**25**	**32**	**40**	**50**
Rod end male thread	Male thread	1.5	3	6	12	26	27	53
	Nut	1	2	4	8	17	17	32

Calculation: (Example) **CDQP2B32-10SM**
- Basic weight: CDQP2B32-10S ····· 242 g
- Additional weight: Rod end male thread ·····43 g

285 g

Add each weight of auto switches when auto switches are mounted.

Through-hole Type Mounting Bolt for the CQP2: Without Auto Switch Magnet

Mounting bolt for the through-hole mounting of the CQP2B is available as an option.
Refer to the following for ordering procedures.
Order the actual number of bolts that will be used.

Example) CQ-M3 x 25L 2 pcs.

Type: Hexagon socket head cap screw
Material: Chromium molybdenum steel
Surface treatment: Zinc chromated

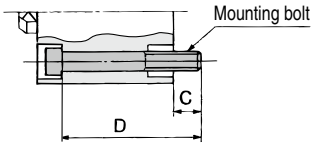

Spring Return

Cylinder model	C	D	Mounting bolt part no.
CQP2B12-5S	6.5	25	CQ-M3 x 25L
-10S		30	x 30L
CQP2B16-5S	5	25	CQ-M3 x 25L
-10S		30	x 30L
CQP2B20-5S	7.5	25	CQ-M5 x 25L
-10S		30	x 30L
CQP2B25-5S	9.5	30	CQ-M5 x 30L
-10S		35	x 35L
CQP2B32-5S	9	30	CQ-M5 x 30L
-10S		35	x 35L
CQP2B40-5S	7.5	35	CQ-M5 x 35L
-10S		40	x 40L
CQP2B50-10S	12.5	45	CQ-M6 x 45L
-20S		55	x 55L

Spring Extend

Cylinder model	C	D	Mounting bolt part no.
CQP2B12-5T	6.5	25	CQ-M3 x 25L
-10T		30	x 30L
CQP2B16-5T	5	25	CQ-M3 x 25L
-10T		30	x 30L
CQP2B20-5T	7.5	25	CQ-M5 x 25L
-10T		30	x 30L
CQP2B25-5T	9.5	30	CQ-M5 x 30L
-10T		35	x 35L
CQP2B32-5T	9	30	CQ-M5 x 30L
-10T		35	x 35L
CQP2B40-5T	7.5	35	CQ-M5 x 35L
-10T		40	x 40L
CQP2B50-10T	12.5	45	CQ-M6 x 45L
-20T		55	x 55L

Through-hole Type Mounting Bolt for the CDQP2: With Auto Switch Magnet

Spring Return

Cylinder model	C	D	Mounting bolt part no.
CDQP2B12-5S	5.5	35	CQ-M3 x 35L
-10S		40	x 40L
CDQP2B16-5S	8	40	CQ-M3 x 40L
-10S		45	x 45L
CDQP2B20-5S	10.5	40	CQ-M5 x 40L
-10S		45	x 45L
CDQP2B25-5S	9.5	40	CQ-M5 x 40L
-10S		45	x 45L
CDQP2B32-5S	9	40	CQ-M5 x 40L
-10S		45	x 45L
CDQP2B40-5S	7.5	45	CQ-M5 x 45L
-10S		50	x 50L
CDQP2B50-10S	12.5	55	CQ-M6 x 55L
-20S		65	x 65L

Spring Extend

Cylinder model	C	D	Mounting bolt part no.
CDQP2B12-5T	6.1	40	CQ-M3 x 40L
-10T		45	x 45L
CDQP2B16-5T	8	40	CQ-M3 x 40L
-10T		45	x 45L
CDQP2B20-5T	10.5	40	CQ-M5 x 40L
-10T		45	x 45L
CDQP2B25-5T	9.5	40	CQ-M5 x 40L
-10T		45	x 45L
CDQP2B32-5T	9	40	CQ-M5 x 40L
-10T		45	x 45L
CDQP2B40-5T	7.5	45	CQ-M5 x 45L
-10T		50	x 50L
CDQP2B50-10T	12.5	55	CQ-M6 x 55L
-20T		65	x 65L

Construction

Without auto switch magnet

Spring return

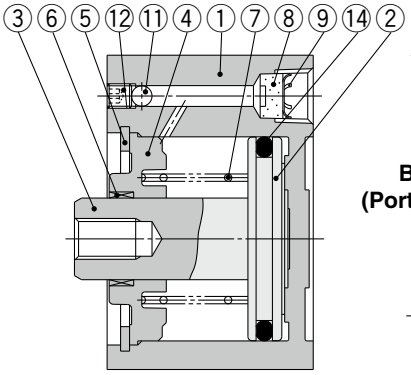

A-A section
For the single acting type, the supply/exhaust port is on the spring side.

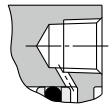

B-B section
(Port on head end)

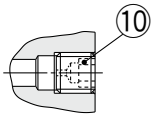

Port size
M5 x 0.8
A-A section

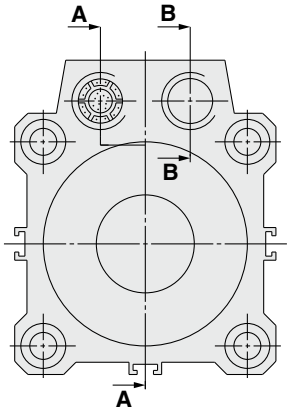

Spring extend

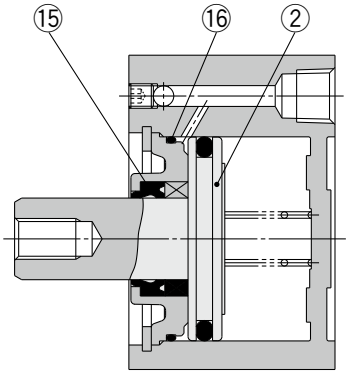

A-A section
(Port on rod end)

With auto switch magnet

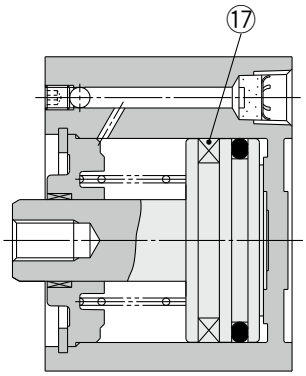

Rod end male thread

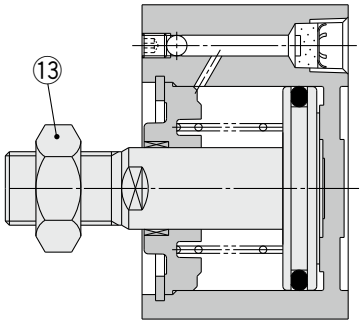

Component Parts

No.	Description	Material	Note
1	**Cylinder tube**	Aluminum alloy	Hard anodized
2*1	**Piston**	Aluminum alloy	
3	**Piston rod**	Stainless steel	ø12 to ø25
		Carbon steel	ø32 to ø50, Hard chrome plating
4	**Collar**	Aluminum alloy	ø12 to ø40, Anodized
		Aluminum alloy casted	ø50, Chromated, Painted
5	**Retaining ring**	Carbon tool steel	Phosphate coated
6	**Bushing**	Bearing alloy	
7	**Return spring**	Piano wire	Zinc chromated
8	**Bronze element**	Sintered metallic BC	Port sizes Rc1/8, 1/4
9	**Retaining ring**	Carbon tool steel	
10	**Plug with fixed orifice**	Alloy steel	Port size M5 x 0.8
11	**Steel ball**	Carbon steel	
12	**Hexagon socket head set screw**	Alloy steel	Zinc chromated
13	**Rod end nut**	Carbon steel	Zinc chromated
14	**Piston seal**	NBR	
15	**Rod seal**	NBR	
16	**Gasket**	NBR	
17	**Magnet**	—	

*1 For the spring extend type (Type T), the piston and piston rod are integrated (stainless steel).

Replacement Parts/Seal Kit

Bore size [mm]	Kit no. (Single acting/Spring return)	Kit no. (Single acting/Spring extend)
12	CQ2B12-S-PS	CQ2B12-T-PS
16	CQ2B16-S-PS	CQ2B16-T-PS
20	CQ2B20-S-PS	CQ2B20-T-PS
25	CQ2B25-S-PS	CQ2B25-T-PS
32	CQ2B32-S-PS	CQ2B32-T-PS
40	CQ2B40-S-PS	CQ2B40-T-PS
50	CQ2B50-S-PS	CQ2B50-T-PS
Contents	⑭ only	Set of nos. ⑭, ⑮, ⑯

* Order the seal kit based on each bore size.
* The seal kit does not include a grease pack. Order it separately.
Grease pack part no.: GR-S-010 (10 g)

Bore Size

ø12 to ø50 Spring Return With/Without Auto Switch Magnet

Through-hole: C□QP2B□S

ø12 to ø25

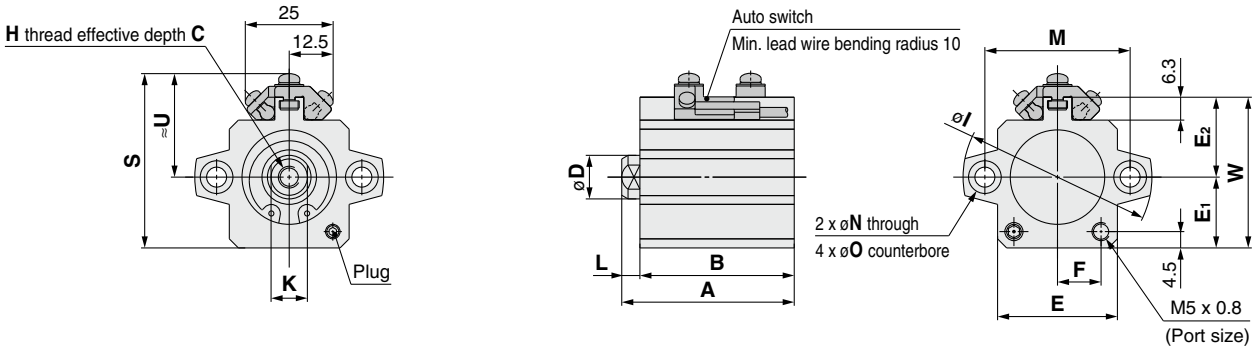

[mm]

Bore size [mm]	Without auto switch magnet				With auto switch magnet				S	U	C	D	E	E1	E2	F	H	I	K	L	M	N	O	W
	A		B		A		B																	
	5 st	10 st	5 st	10 st	5 st	10 st	5 st	10 st																
12	25.5	30.5	22	27	36.5	41.5	33	38	33.5	20.5	6	6	23	13	14	7	M3 x 0.5	32	5	3.5	22	3.5	6.5 depth 3.5	27
16	27	32	23.5	28.5	39	44	35.5	40.5	38.5	23.5	8	8	26	15	17	8.5	M4 x 0.7	38	6	3.5	28	3.5	6.5 depth 3.5	32
20	29	34	24.5	29.5	41	46	36.5	41.5	42.5	25.5	7	10	30	17	19	10.5	M5 x 0.8	47	8	4.5	36	5.5	9 depth 7	36
25	32.5	37.5	27.5	32.5	42.5	47.5	37.5	42.5	48	28.5	12	12	33	19.5	22	12	M6 x 1.0	52	10	5	40	5.5	9 depth 7	41.5

∗ For details on the rod end nut and accessory brackets ⇨ p. 34 to 36
∗ For the auto switch proper mounting position and mounting height ⇨ p. 149 to 156

ø32 to ø50

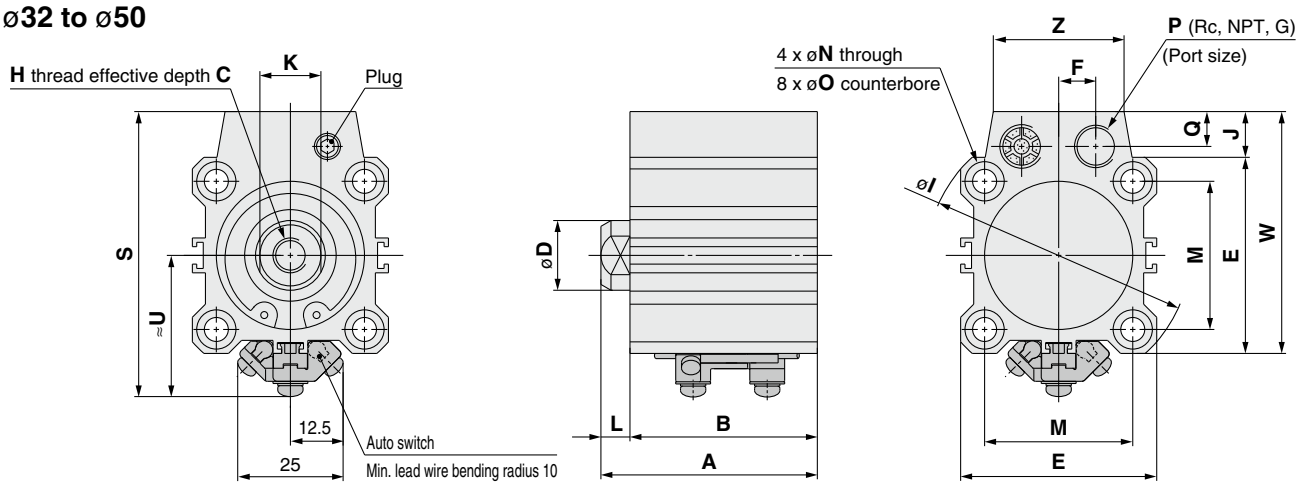

[mm]

Bore size [mm]	Without auto switch magnet						With auto switch magnet						S	U	C	D	E	F	H	I	J	K	L	M	N	O	P	Q	W	Z
	A			B			A			B																				
	5 st	10 st	20 st	5 st	10 st	20 st	5 st	10 st	20 st	5 st	10 st	20 st																		
32	35	40	—	28	33	—	45	50	—	38	43	—	65.5	32.5	13	16	45	8.5	M8 x 1.25	60	10.5	14	7	34	5.5	9 depth 7	1/8	8	55.5	30
40	41.5	46.5	—	34.5	39.5	—	51.5	56.5	—	44.5	49.5	—	72	36	13	16	52	8.5	M8 x 1.25	69	10	14	7	40	5.5	9 depth 7	1/8	8	62	30
50	—	48.5	58.5	—	40.5	50.5	—	58.5	68.5	—	50.5	60.5	87	42	15	20	64	11	M10 x 1.5	86	13	17	8	50	6.6	11 depth 8	1/4	10	77	39

∗ For details on the rod end nut ⇨ p. 34 to 36
∗ For the auto switch proper mounting position and mounting height ⇨ p. 149 to 156

Rod end male thread

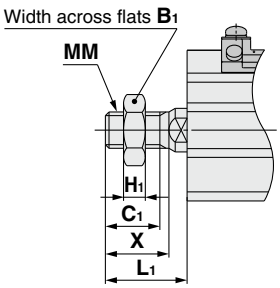

[mm]

Bore size [mm]	B_1	C_1	H_1	L_1	MM	X
12	8	9	4	14	M5 x 0.8	10.5
16	10	10	5	15.5	M6 x 1.0	12
20	13	12	5	18.5	M8 x 1.25	14
25	17	15	6	22.5	M10 x 1.25	17.5
32	22	20.5	8	28.5	M14 x 1.5	23.5
40	22	20.5	8	28.5	M14 x 1.5	23.5
50	27	26	11	33.5	M18 x 1.5	28.5

Bore Size

ø12 to ø50 Spring Extend With/Without Auto Switch Magnet

Through-hole: C□QP2B□T

ø12 to ø25

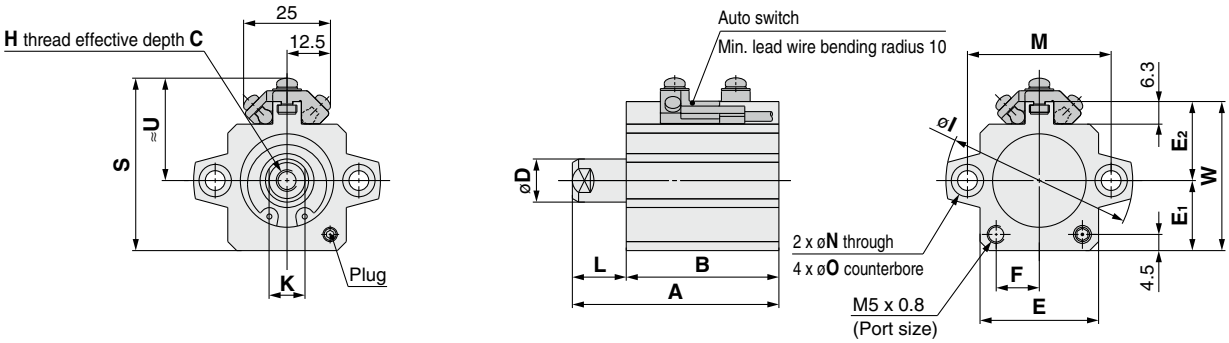

[mm]

Bore size [mm]	Without auto switch magnet				With auto switch magnet				S	U	C	D	E	E1	E2	F	H	I	K	L		M	N	O	W
	A		B		A		B																		
	5 st	10 st	5 st	10 st	5 st	10 st	5 st	10 st												5 st	10 st				
12	30.5	40.5	22	27	45.9	55.9	37.4	42.4	33.5	20.5	6	6	23	13	14	7	M3 x 0.5	32	5	8.5	13.5	22	3.5	6.5 depth 3.5	27
16	32	42	23.5	28.5	44	54	35.5	40.5	38.5	23.5	8	8	26	15	17	8.5	M4 x 0.7	38	6	8.5	13.5	28	3.5	6.5 depth 3.5	32
20	34	44	24.5	29.5	46	56	36.5	41.5	42.5	25.5	7	10	30	17	19	10.5	M5 x 0.8	47	8	9.5	14.5	36	5.5	9 depth 7	36
25	37.5	47.5	27.5	32.5	47.5	57.5	37.5	42.5	48	28.5	12	12	33	19.5	22	12	M6 x 1.0	52	10	10	15	40	5.5	9 depth 7	41.5

∗ For details on the rod end nut ⇨ p. 34
∗ For the auto switch proper mounting position and mounting height ⇨ p. 149 to 156

ø32 to ø50

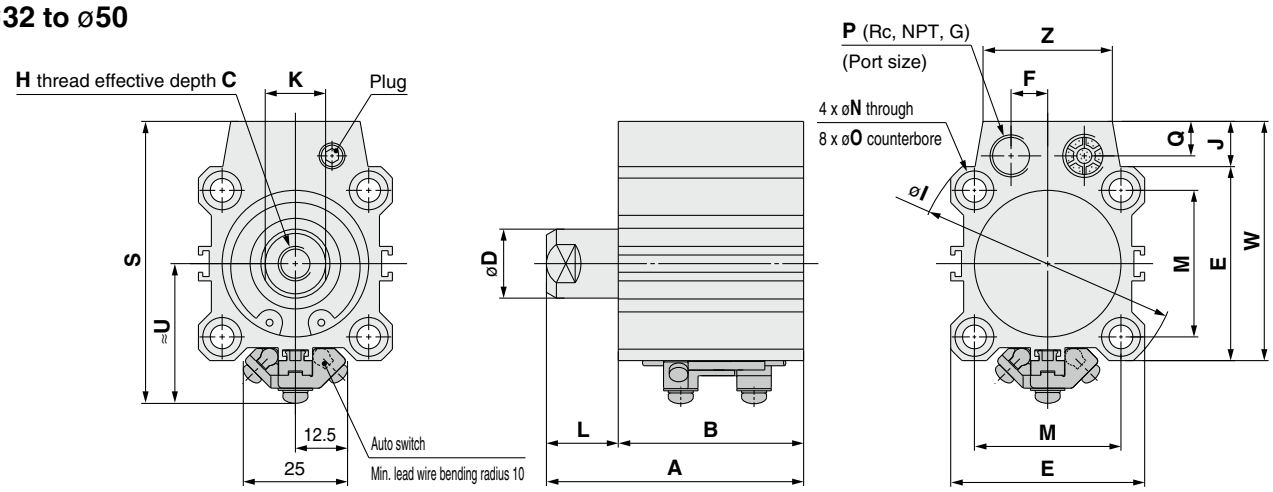

[mm]

Bore size [mm]	Without auto switch magnet						With auto switch magnet						S	U	C	D	E	F	H	I	J	K	L			M	N	O	P	Q	W	Z
	A			B			A			B																						
	5 st	10 st	20 st	5 st	10 st	20 st	5 st	10 st	20 st	5 st	10 st	20 st											5 st	10 st	20 st							
32	40	50	—	28	33	—	50	60	—	38	43	—	62	29	13	16	45	8.5	M8 x 1.25	60	10.5	14	12	17	—	34	5.5	9 depth 7	1/8	8	55.5	30
40	46.5	56.5	—	34.5	39.5	—	56.5	66.5	—	44.5	49.5	—	68.5	32.5	13	16	52	8.5	M8 x 1.25	69	10	14	12	17	—	40	5.5	9 depth 7	1/8	8	62	30
50	—	58.5	78.5	—	40.5	50.5	—	68.5	88.5	—	50.5	60.5	83.5	38.5	15	20	64	11	M10 x 1.5	86	13	17	—	18	28	50	6.6	11 depth 8	1/4	10	77	39

∗ For details on the rod end nut ⇨ p. 34
∗ For the auto switch proper mounting position and mounting height ⇨ p. 149 to 156

Rod end male thread

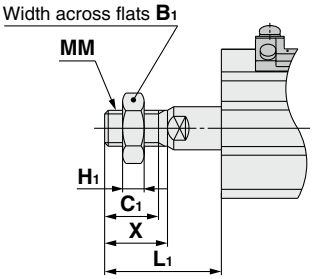

[mm]

Bore size [mm]	B_1	C_1	H_1	L_1			MM	X
				5 st	10 st	20 st		
12	8	9	4	19	24	—	M5 x 0.8	10.5
16	10	10	5	20.5	25.5	—	M6 x 1.0	12
20	13	12	5	23.5	28.5	—	M8 x 1.25	14
25	17	15	6	27.5	32.5	—	M10 x 1.25	17.5
32	22	20.5	8	33.5	38.5	—	M14 x 1.5	23.5
40	22	20.5	8	33.5	38.5	—	M14 x 1.5	23.5
50	27	26	11	—	43.5	53.5	M18 x 1.5	28.5

		With End Lock	Axial Piping		Water Resistant		Non-rotating Rod		Long Stroke	Anti-lateral Load	Large Bore Size		Standard		
Made to Order	Auto Switch	Double Acting, Single Rod **CBQ2**	Single Acting, Spring Return/Extend **CQP2**	Double Acting, Single Rod **CQP2**	Double Acting, Double Rod **CQ2W-R/V**	Double Acting, Single Rod **CQ2-R/V**	Double Acting, Double Rod **CQ2KW**	Double Acting, Single Rod **CQ2K**	Double Acting, Single Rod **CQ2**	Double Acting, Single Rod **CQ2□S**	Double Acting, Double Rod **CQ2W**	Double Acting, Single Rod **CQ2**	Single Acting, Spring Return/Extend **CQ2**	Double Acting, Double Rod **CQ2W**	Double Acting, Single Rod **CQ2**

Compact Cylinder: With End Lock

CBQ2 Series

ø20, ø25, ø32, ø40, ø50, ø63, ø80, ø100

How to Order

Without auto switch CBQ2 B 40 □ – 30 D C □ – H N – □

With auto switch CDBQ2 B 40 □ – 30 D C □ – H N – M9BW □ – □

With auto switch magnet

❶ ❷ ❸ ❹ ❺ ❻ ❼ ❽ ❾ ❿ ⓫ ⓬

❶ Mounting

B	Through-hole*1	ø20 to ø100
L	Foot	
LC	Compact foot	
F	Rod flange	
G	Head flange	
D	Double clevis	
A	Both ends tapped	ø32 to ø100

*1 ø20, ø25 have both through-hole (B) and both ends tapped (A). At the 75 and 100 mm strokes with ø80, ø100, both ends tapped (A) is the standard. Through-hole (B) is not available.

* Mounting brackets are shipped together with the product but do not come assembled.
* A through-hole type mounting bolt is available as an option. For details ⇨ p. 143

❷ Bore size

20	20 mm
25	25 mm
32	32 mm
40	40 mm
50	50 mm
63	63 mm
80	80 mm
100	100 mm

❸ Port thread type

Nil	M thread	ø12, ø25
	Rc	ø32 to ø100
TN	NPT	
TF	G	

❹ Cylinder stroke (For details on the minimum stroke for auto switch mounting ⇨ p. 157) [mm]

Bore size	Standard stroke
20, 25, 32, 40, 50, 63	10, 15, 20, 25, 50, 75, 100
80, 100	25, 50, 75, 100

* For the manufacturing of intermediate strokes ⇨ p. 141

❺ Action

D	Double acting

❻ Cushion

C	Rubber bumper

❼ Body option

Nil	Rod end female thread
M	Rod end male thread

❽ Lock position

H	Head end lock
R	Rod end lock

❾ Manual release type

N	Non-lock type
L	Lock type

❿ Auto switch

Nil	Without auto switch

* For applicable auto switches ⇨ p. 140

⓫ Number of auto switches

Nil	2
S	1
n	n

⓬ Made to order common specifications

For details ⇨ p. 141

Cylinder Model with Auto Switch Magnet

If a cylinder with an auto switch magnet and without an auto switch is required, there is no need to enter the symbol for the auto switch.
(Example) CDBQ2L32-30DC-RL

For details on **auto switch mounting** ⇨ p. 149 to 165

- Auto Switch Proper Mounting Position (Detection at stroke end) and Mounting Height
- Minimum Stroke for Auto Switch Mounting
- Operating Range
- Auto Switch Mounting Brackets/Part Nos.

Applicable Auto Switches / Refer to the **Web Catalog** for further information on auto switches.

Type	Special function	Electrical entry	Indicator light	Wiring (Output)	Load voltage DC		Load voltage AC	Auto switch model: Perpendicular ø20, ø25	Perpendicular ø32 to ø100	In-line ø20, ø25	In-line ø32	In-line ø40 to ø100	Lead wire length [m] 0.5 (Nil)	1 (M)	3 (L)	5 (Z)	None (N)	Pre-wired connector	Applicable load	
Solid state auto switch	——	Grommet	Yes	3-wire (NPN)	24 V	5 V, 12 V	—	**M9NV**		**M9N**			●	●	●	○	—	○	IC circuit	Relay, PLC
				3-wire (PNP)				**M9PV**		**M9P**			●	●	●	○	—	○		
				2-wire		12 V		**M9BV**		**M9B**			●	●	●	○	—	○	—	
		Connector						—	**J79C**	—			●	—	●	●	●	—		
	Diagnostic indication (2-color indicator)	Grommet		3-wire (NPN)		5 V, 12 V		**M9NWV**		**M9NW**			●	●	●	○	—	○	IC circuit	
				3-wire (PNP)				**M9PWV**		**M9PW**			●	●	●	○	—	○		
				2-wire		12 V		**M9BWV**		**M9BW**			●	●	●	○	—	○	—	
	Water resistant (2-color indicator)			3-wire (NPN)		5 V, 12 V		**M9NAV**∗1		**M9NA**∗1			○	○	●	○	—	○	IC circuit	
				3-wire (PNP)				**M9PAV**∗1		**M9PA**∗1			○	○	●	○	—	○		
				2-wire		12 V		**M9BAV**∗1		**M9BA**∗1			○	○	●	○	—	○	—	
	With diagnostic output (2-color indicator)			4-wire		5 V, 12 V		—		—		**F79F**	●	—	●	○	—	○	IC circuit	
	Magnetic field resistant (2-color indicator)			2-wire (Non-polar)		—		—		—		**P4DW**	—	—	●	●	—	○	—	
Reed auto switch	——	Grommet	Yes	3-wire (NPN equivalent)	—	5 V	—	**A96V**		**A96**			●	●	●	●	—	○	IC circuit	—
				2-wire		—	200 V	—	**A72**	—		**A72H**	●	—	●	—	—	—	—	Relay, PLC
					24 V	12 V	100 V	**A93V**		**A93**			●	●	●	●	—	○∗2		
			No			5 V, 12 V	100 V or less	**A90V**		**A90**			●	●	●	●	—	○∗2	IC circuit	
		Connector	Yes			12 V	—	—	**A73C**	—			●	—	●	●	●	—	—	
			No			5 V, 12 V	24 V or less	—	**A80C**	—			●	—	●	●	●	—	IC circuit	
	Diagnostic indication (2-color indicator)	Grommet	Yes			—	—	—	**A79W**	—			●	—	●	—	—	—	—	

∗1 Water-resistant type auto switches can be mounted on the models on page 139, but SMC cannot guarantee water resistance. Please contact SMC regarding water-resistant types with the model numbers on page 139.
∗2 The load voltage used is 24 VDC.

∗ Lead wire length symbols: 0.5 m ····· Nil (Example) M9NW
1 m ····· M (Example) M9NWM
3 m ····· L (Example) M9NWL
5 m ····· Z (Example) M9NWZ
None ····· N (Example) J79CN

∗ Auto switches marked with a "○" are produced upon receipt of order.
∗ The D-P4DW type is only available in sizes ø40 to ø100.
∗ Only for the D-P4DW type, an auto switch is assembled and shipped with the cylinder.

∗ There are applicable auto switches other than those listed above. For details ⇨ p. 165
∗ When the D-A9□(V)/M9□(V)/M9□W(V)/M9□A(V) types with ø32 to ø50 are mounted on a surface other than the port side, order auto switch mounting brackets separately. For details ⇨ p. 163, 164

Symbol

Rubber bumper

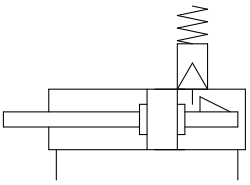

Made to Order

Made to Order Common Specifications
(For details ⇨ p. 167 to 196)

Symbol	Specifications
-XB10	Intermediate stroke (Exclusive body type)
-XC26	With split pins for double clevis pin/ double knuckle joint pin and flat washers
-XC85	Grease for food processing equipment

∗ Stainless steel accessories are also available. For details ⇨ p. 34

Specifications

Bore size [mm]	20	25	32	40	50	63	80	100
Action	Double acting, Single rod							
Fluid	Air							
Proof pressure	1.5 MPa							
Maximum operating pressure	1.0 MPa							
Minimum operating pressure	0.15 MPa∗1							
Ambient and fluid temperatures	Without auto switch magnet: –10 to 70°C With auto switch magnet: –10 to 60°C (No freezing)							
Lubrication	Not required (Non-lube)							
Piston speed	50 to 500 mm/s							
Cushion	Rubber bumper							
Allowable kinetic energy [J]	0.055	0.09	0.15	0.26	0.46	0.77	1.36	2.27
Stroke length tolerance	$^{+1.0}_{0}$ mm∗2							

∗1 0.05 MPa except for the end lock unit
∗2 Stroke length tolerance does not include the amount of bumper change.

Lock Specifications

Bore size [mm]	20	25	32	40	50	63	80	100
Holding force (Max.) [N]	215	330	550	860	1340	2140	3450	5390
Backlash	2 mm or less							
Manual release	Non-lock type, Lock type							

Manufacturing of Intermediate Strokes

Type	A spacer is installed in the standard stroke body.		Exclusive body (-XB10)	
Part no.	Refer to "How to Order" for the standard model number. (⇨ p. 139)		Suffix "-XB10" to the end of standard model number. (⇨ p. 139)	
Description	Strokes in 5 mm increments are available by installing a spacer in the standard stroke cylinder.		Dealing with the stroke in 1 mm increments by using an exclusive body with the specified stroke.	
Stroke range	Bore size	Stroke range	Bore size	Stroke range
	20 to 100	5 to 95	20 to 63	11 to 99
			80, 100	26 to 99
Example	Part no.: CBQ2B40-45DC-HL CBQ2B40-50DC-HL with 5 mm width spacer inside. B dimension is 125 mm.		Part no.: CBQ2B40-45DC-HL-XB10 Makes 45 stroke tube. B dimension is 120 mm.	

In the case of an exclusive body type for ø20, ø25, ø80 and ø100 (-XB10) with the stroke length exceeding 25 mm, the reference values of the longitudinal dimension will be changed.
Subtract from 50, 75 and 100 stroke dimensions and figure it out.

Mounting Bracket Part Nos.

Bore size [mm]	Foot∗1	Compact foot∗1	Flange	Double clevis∗2	Double clevis pivot bracket
20	CQS-L020	CQS-LC020	CQS-F020	CQS-D020	CQ-C020
25	CQS-L025	CQS-LC025	CQS-F025	CQS-D025	CQ-C025
32	CQ-L032	CQ-LC032	CQ-F032	CQ-D032	CQ-C032
40	CQ-L040	CQ-LC040	CQ-F040	CQ-D040	CQ-C040
50	CQ-L050	CQ-LC050	CQ-F050	CQ-D050	CQ-C050
63	CQ-L063	CQ-LC063	CQ-F063	CQ-D063	CQ-C063
80	CQ-L080	CQ-LC080	CQ-F080	CQ-D080	CQ-C080
100	CQ-L100	CQ-LC100	CQ-F100	CQ-D100	CQ-C100

∗1 When ordering foot and compact foot brackets, order 2 pieces per cylinder.
∗2 Parts included with each type of bracket are as follows. Foot, Compact foot, Flange: Body mounting bolts, Double clevis: Clevis pin, Type C retaining rings for axis, Body mounting bolts
∗ Clevis pin and retaining rings are included with double clevis.
∗ Foot, compact foot, flange brackets, etc., cannot be retrofitted for through-hole mounting (B).

Dimensions of Each Mounting Bracket

The dimensions of each mounting bracket are the same as those of the standard type, double acting, single rod (except the configuration of the piston rod). Refer to pages 29 to 33.

Moisture Control Tube
IDK Series

When operating an actuator with a small bore size and a short stroke at a high frequency, dew condensation (water droplets) may occur inside the piping depending on the conditions.
Simply connecting the moisture control tube to the actuator will prevent dew condensation from occurring. For details, refer to the **Web Catalog**.

⚠ Precautions

Refer to pages 197, 199, and 200 before handling the products.

Allowable Kinetic Energy

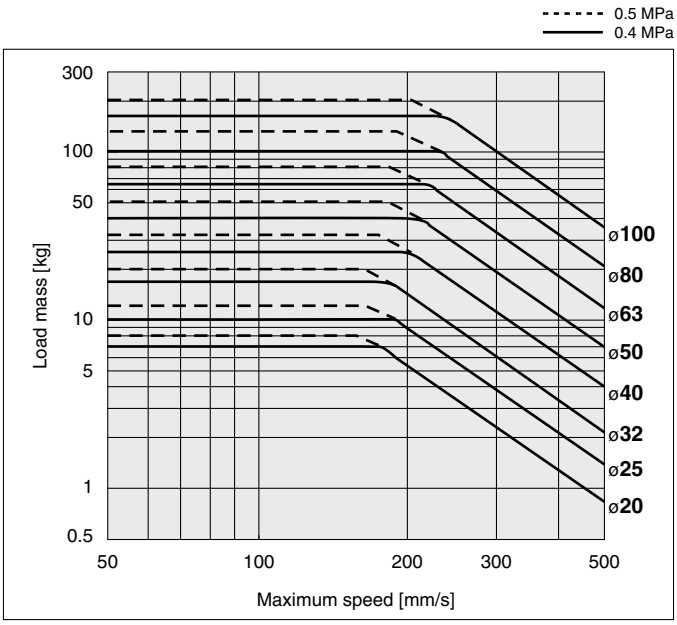

Allowable Lateral Load at Rod End

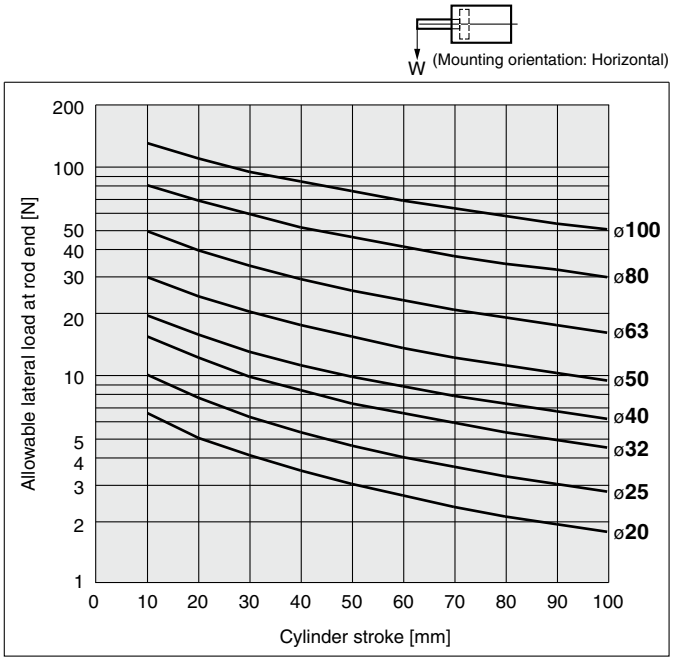

Weight

Without Auto Switch Magnet, Non-lock Type (-□N)

[g]

Bore size [mm]	Cylinder stroke [mm]						
	10	15	20	25	50	75	100
20	211	224	237	249	313	416	480
25	278	294	310	325	405	534	613
32	378	399	419	440	544	649	754
40	540	563	586	610	725	845	965
50	868	904	940	976	1158	1346	1534
63	1097	1138	1179	1220	1424	1636	1847
80	—	—	—	2821	3160	3495	3829
100	—	—	—	4306	4760	5220	5680

Additional Weight

[g]

Bore size [mm]		**20**	**25**	**32**	**40**	**50**	**63**	**80**	**100**
Lock type (-□L)		10	10	10	20	20	20	30	30
With auto switch magnet		5	6	11	13	18	22	24	35
Both ends tapped		—	—	6	6	6	19	45	45
Rod end male thread	Male thread	6	12	26	27	53	53	120	175
	Nut	4	8	17	17	32	32	49	116
Foot (Including mounting bolts)		152	177	120	138	219	297	589	968
Compact foot (Including mounting bolts)		117	135	94	109	172	234	492	762
Rod flange (Including mounting bolts)		143	180	180	214	373	559	1056	1365
Head flange (Including mounting bolts)		137	171	165	198	348	534	1017	1309
Double clevis (Including pin, retaining rings, bolts)		92	127	151	196	393	554	1109	1887

Calculation: (Example) **CBQ2B32-50DCM-HN**
- Basic weight: CBQ2B32-50DC-HN ····· 544 g
- Additional weight: Rod end male thread ····· 43 g (26 g + 17g)

Total 587 g

Through-hole Type Mounting Bolt for the CⒹBQ2

Mounting bolt for the through-hole mounting of the C(D)BQ2 is available as an option.
Refer to the following for ordering procedures.
Order the actual number of bolts that will be used.

Example) CQ-M5 x 75L 4 pcs.

∗ Be sure to use the attached flat washers when mounting ø20 and ø25 cylinders with through-holes.

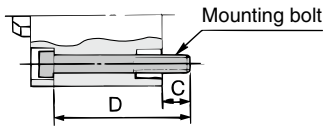

Type: Hexagon socket head cap screw
Material: Chromium molybdenum steel
Surface treatment: Zinc chromated

With Head End Lock (H□)

Cylinder model	C	D	Mounting bolt part no.
CⒹBQ2B20-10DC-H□	10	75	CQ-M5 x 75L
-15DC-H□		80	x 80L
-20DC-H□		85	x 85L
-25DC-H□		90	x 90L
-50DC-H□		120	x 120L
-75DC-H□		145	x 145L
-100DC-H□		170	x 170L
CⒹBQ2B25-10DC-H□	7	75	CQ-M5 x 75L
-15DC-H□		80	x 80L
-20DC-H□		85	x 85L
-25DC-H□		90	x 90L
-50DC-H□		120	x 120L
-75DC-H□		145	x 145L
-100DC-H□		170	x 170L
CⒹBQ2B32-10DC-H□	6.5	75	CQ-M5 x 75L
-15DC-H□		80	x 80L
-20DC-H□		85	x 85L
-25DC-H□		90	x 90L
-50DC-H□		115	x 115L
-75DC-H□		140	x 140L
-100DC-H□		165	x 165L
CⒹBQ2B40-10DC-H□	7	85	CQ-M5 x 85L
-15DC-H□		90	x 90L
-20DC-H□		95	x 95L
-25DC-H□		100	x 100L
-50DC-H□		125	x 125L
-75DC-H□		150	x 150L
-100DC-H□		175	x 175L

Cylinder model	C	D	Mounting bolt part no.
CⒹBQ2B50-10DC-H□	12.5	90	CQ-M6 x 90L
-15DC-H□		95	x 95L
-20DC-H□		100	x 100L
-25DC-H□		105	x 105L
-50DC-H□		130	x 130L
-75DC-H□		155	x 155L
-100DC-H□		180	x 180L
CⒹBQ2B63-10DC-H□	13.5	90	CQ-M8 x 90L
-15DC-H□		95	x 95L
-20DC-H□		100	x 100L
-25DC-H□		105	x 105L
-50DC-H□		130	x 130L
-75DC-H□		155	x 155L
-100DC-H□		180	x 180L
CⒹBQ2B80-25DC-H□	12.5	135	CQ-M10 x 135L
-50DC-H□		160	x 160L
CⒹBQ2B100-25DC-H□	13	145	CQ-M10 x 145L
-50DC-H□		170	x 170L

With Rod End Lock (R□)

Cylinder model	C	D	Mounting bolt part no.
CⒹBQ2B20-10DC-R□	6.5	65	CQ-M5 x 65L
-15DC-R□		70	x 70L
-20DC-R□		75	x 75L
-25DC-R□		80	x 80L
-50DC-R□	10	120	x 120L
-75DC-R□		145	x 145L
-100DC-R□		170	x 170L
CⒹBQ2B25-10DC-R□	8.5	70	CQ-M5 x 70L
-15DC-R□		75	x 75L
-20DC-R□		80	x 80L
-25DC-R□		85	x 85L
-50DC-R□	7	120	x 120L
-75DC-R□		145	x 145L
-100DC-R□		170	x 170L
CⒹBQ2B32-10DC-R□	9	70	CQ-M5 x 70L
-15DC-R□		75	x 75L
-20DC-R□		80	x 80L
-25DC-R□		85	x 85L
-50DC-R□		110	x 110L
-75DC-R□		135	x 135L
-100DC-R□		160	x 160L
CⒹBQ2B40-10DC-R□	7.5	75	CQ-M5 x 75L
-15DC-R□		80	x 80L
-20DC-R□		85	x 85L
-25DC-R□		90	x 90L
-50DC-R□		115	x 115L
-75DC-R□		140	x 140L
-100DC-R□		165	x 165L

Cylinder model	C	D	Mounting bolt part no.
CⒹBQ2B50-10DC-R□	12.5	80	CQ-M6 x 80L
-15DC-R□		85	x 85L
-20DC-R□		90	x 90L
-25DC-R□		95	x 95L
-50DC-R□		120	x 120L
-75DC-R□		145	x 145L
-100DC-R□		170	x 170L
CⒹBQ2B63-10DC-R□	14.5	85	CQ-M8 x 85L
-15DC-R□		90	x 90L
-20DC-R□		95	x 95L
-25DC-R□		100	x 100L
-50DC-R□		125	x 125L
-75DC-R□		150	x 150L
-100DC-R□		175	x 175L
CⒹBQ2B80-25DC-R□	15	130	CQ-M10 x 130L
-50DC-R□		155	x 155L
CⒹBQ2B100-25DC-R□	15.5	140	CQ-M10 x 140L
-50DC-R□		165	x 165L

		With End Lock	Axial Piping		Water Resistant		Non-rotating Rod		Long Stroke	Anti-lateral Load	Large Bore Size		Standard		
Made to Order	Auto Switch	Double Acting, Single Rod **CBQ2**	Single Acting, Spring Return/Extend **CQP2**	Double Acting, Single Rod **CQP2**	Double Acting, Double Rod **CQ2W-R/V**	Double Acting, Single Rod **CQ2-R/V**	Double Acting, Double Rod **CQ2KW**	Double Acting, Single Rod **CQ2K**	Double Acting, Single Rod **CQ2**	Double Acting, Single Rod **CQ2□S**	Double Acting, Double Rod **CQ2W**	Double Acting, Single Rod **CQ2**	Single Acting, Spring Return/Extend **CQ2**	Double Acting, Double Rod **CQ2W**	Double Acting, Single Rod **CQ2**

Construction

ø32 to ø63

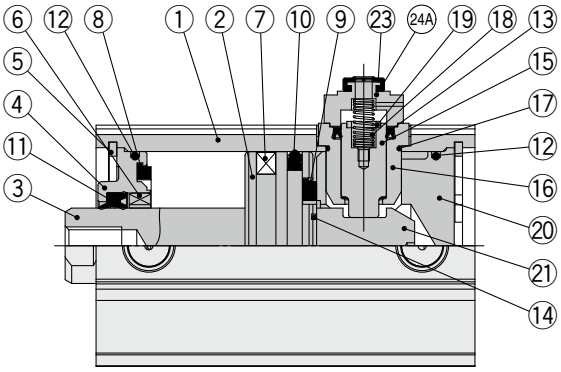

Head end lock

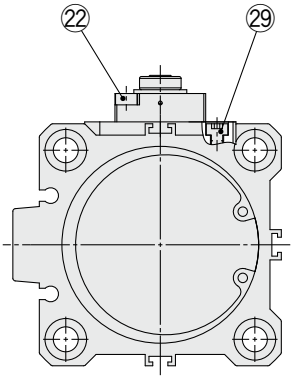

Cylinder tube form ø32 to ø63

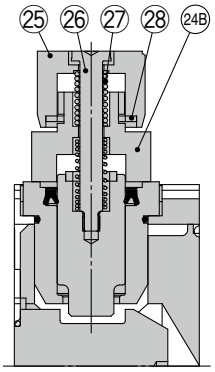

Manual release lock type: Suffix L

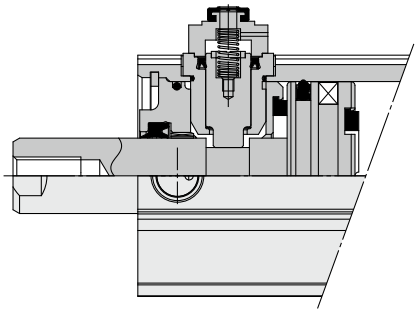

Rod end lock

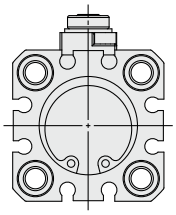

Cylinder tube form ø25 or less

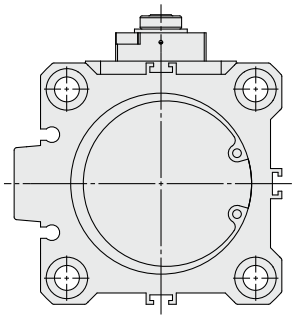

Cylinder tube form ø80 or more

ø20, ø25

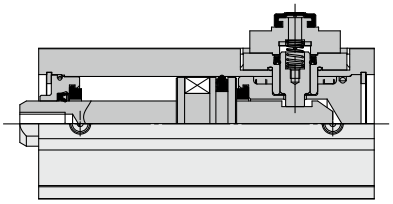

ø80, ø100

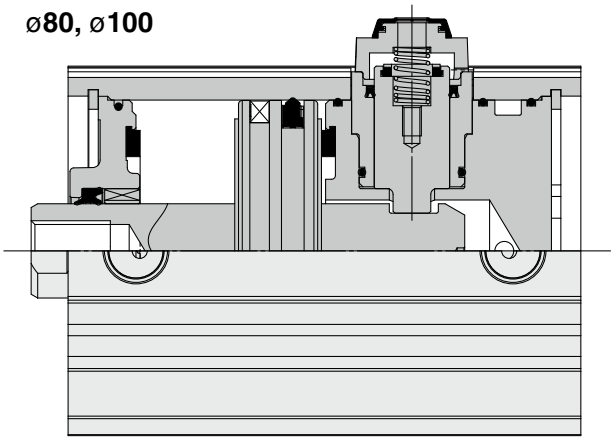

Component Parts

No.	Description	Material	Note
1	**Cylinder tube**	Aluminum alloy	Hard anodized
2	**Piston**	Aluminum alloy	
3	**Piston rod**	Carbon steel	Hard chrome plating
4	**Collar**	Aluminum bearing alloy	ø40 or less, Anodized
		Aluminum alloy casted	ø50 or more, Painted after chromated
5	**Retaining ring**	Carbon tool steel	Phosphate coated
6	**Bushing**	Lead-bronze casted	For ø50 or larger only
7	**Magnet**	—	With auto switch magnet
8	**Bumper A**	Urethane	
9	**Bumper B**	Urethane	
10	**Piston seal**	NBR	
11	**Rod seal**	NBR	
12	**Tube gasket**	NBR	Using 4 pcs. for ø80, ø100
13	**Lock piston seal**	NBR	
14	**Piston gasket**	NBR	
15	**Lock piston**	Carbon steel	Quenched, Hard chrome plating
16	**Lock holder**	Brass	Electroless nickel plating
17	**Gasket**	NBR	
18	**Lock spring**	Stainless steel	
19	**Bumper**	Urethane	
20	**Head cover**	Aluminum alloy	Anodized
21	**Lock bolt**	Carbon steel	Quenched, Hard chrome plating
22	**Hexagon socket head cap screw**	Alloy steel	Black zinc chromated
23	**Rubber cap**	Synthetic rubber	
24A	**Cap A**	Aluminum casted	Black painted
24B	**Cap B**	Carbon steel	Black painted
25	**M/O knob**	Zinc die-casted	Black painted
26	**M/O bolt**	Alloy steel	Black zinc chromated
27	**M/O spring**	Steel wire	Zinc chromated
28	**Stopper ring**	Rolled steel	Zinc chromated
29	**Hexagon socket head cap screw**	Alloy steel	Zinc chromated
30	**Rod end nut**	Carbon steel	

Replacement Parts/Seal Kit (End lock type)

Bore size [mm]	Kit no.	Contents
20	CBQ2B20-PS	Set of nos. ⑩, ⑪, ⑫, ⑬, ⑰, ㉒, ㉙ and a grease pack
25	CBQ2B25-PS	
32	CBQ2B32-PS	
40	CBQ2B40-PS	
50	CBQ2B50-PS	
63	CBQ2B63-PS	
80	CBQ2B80-PS	
100	CBQ2B100-PS	

∗ Seal kit includes ⑩, ⑪, ⑫, ⑬, ⑰, ㉒, ㉙. Order the seal kit based on each bore size.

ø20, ø25 With/Without Auto Switch Magnet

Through-hole: CⒹBQ2B

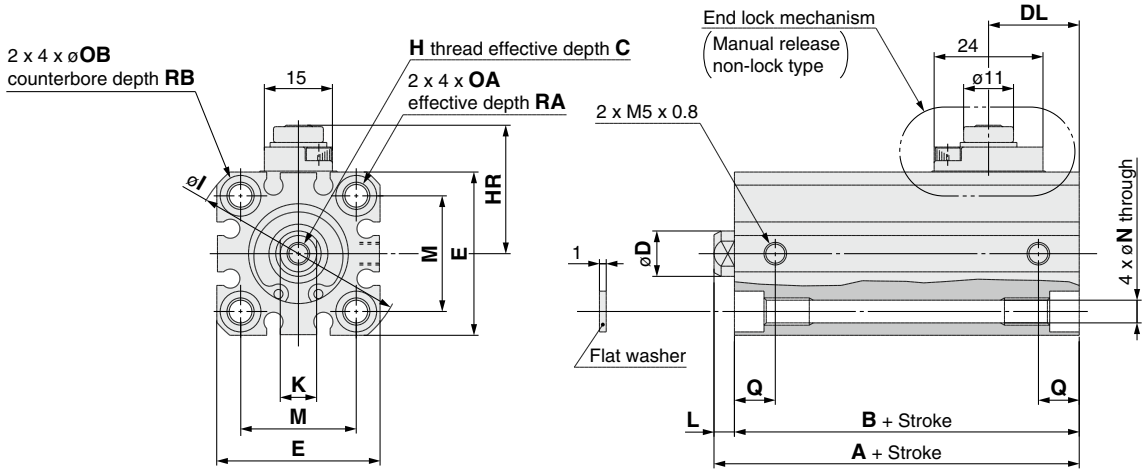

With head end lock

With rod end lock

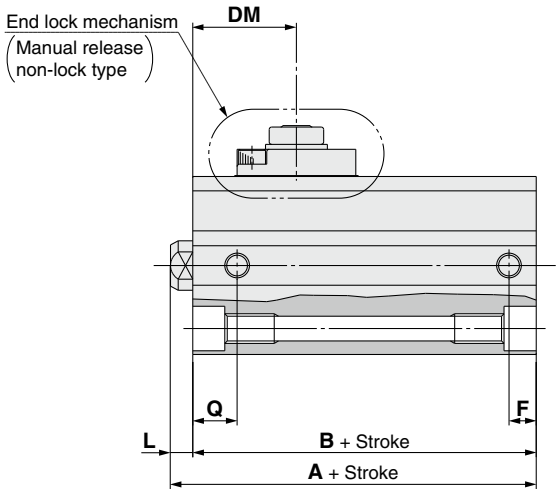

[mm]

Bore size [mm]	Standard stroke	With head end lock		With rod end lock			C	D	DL	DM	E	H	HR	I	K	L	M	N	OA	OB	Q	RA	RB
		A	B	A	B	F																	
20	10, 15, 20, 25	65.5	61	59	54.5	5.5	7	10	20	21	36	M5 x 0.8	28.5	47	8	4.5	25.5	5.4	M6 x 1.0	9	9	10	7
	50, 75, 100	80.5	66	80.5	66	9										14.5							
25	10, 15, 20, 25	69	64	62.5	57.5	5.5	12	12	21	21	40	M6 x 1.0	29.5	52	10	5	28	5.4	M6 x 1.0	9	11	10	7
	50, 75, 100	84	69	84	69	11										15							

∗ For details on the rod end nut and accessory brackets ⇨ p. 34 to 36

End lock mechanism
(Manual release lock type)

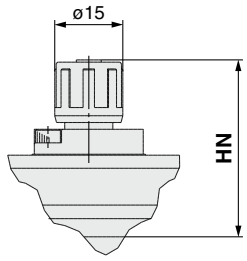

[mm]

Bore size [mm]	HN (Max.)
20	40
25	41

Rod end male thread

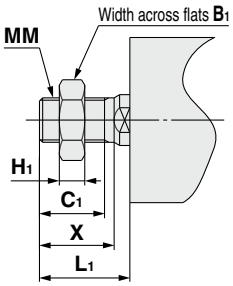

[mm]

Bore size [mm]	Standard stroke	B_1	C_1	H_1	L_1	MM	X
20	10, 15, 20, 25	13	12	5	18.5	M8 x 1.25	14
	50, 75, 100				28.5		
25	10, 15, 20, 25	17	15	6	22.5	M10 x 1.25	17.5
	50, 75, 100				32.5		

Dimensions of Each Mounting Bracket

The dimensions of each mounting bracket are the same as those of the standard type, double acting, single rod (except the configuration of the piston rod). Refer to pages 29 to 33.

Bore Size

ø32 to ø100 With/Without Auto Switch Magnet

Standard: CⒹBQ2B

ø63, ø80, ø100

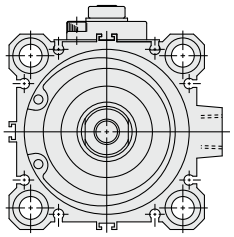

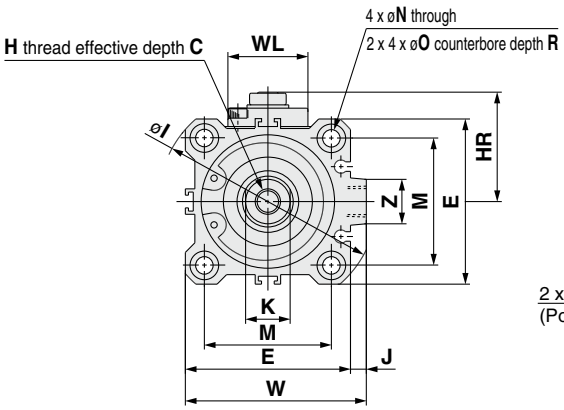

With head end lock

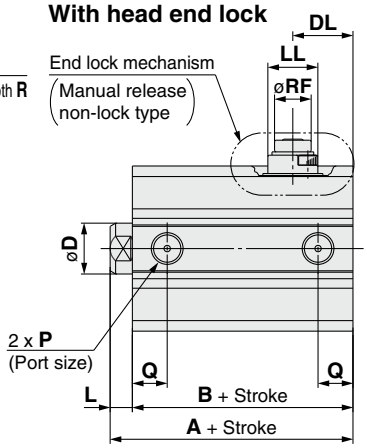

With rod end lock

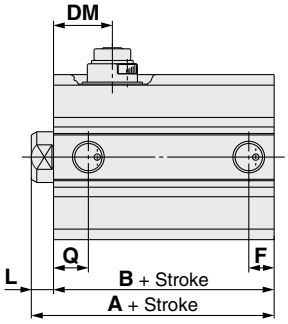

[mm]

Bore size [mm]	HN (Max.)	MO
32	45	15
40	52.5	19
50	59	19
63	64	19
80	76.5	23
100	86	23

End lock mechanism
(Manual release lock type)

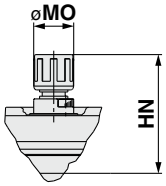

[mm]

Bore size [mm]	Standard stroke	With head end lock			With rod end lock				C	D	DL	DM	E	H	HR	I	J	K	L	LL	M
		A	B	Q	A	B	F	Q													
32	10, 15, 20 25, 50 75, 100	72.5	65.5	12.5	65	58	7.5	10.5	13	16	25	22	45	M8 x 1.25	33.5	60	4.5	14	7	15	34
40		82	75	14	71.5	64.5	8	11	13	16	29	26	52	M8 x 1.25	38.5	69	5	14	7	21	40
50		83.5	75.5	14	73.5	65.5	10.5	10.5	15	20	29.5	24	64	M10 x 1.5	45	86	7	17	8	21	50
63		85	77	15.5	79	71	10.5	15	15	20	28.5	25	77	M10 x 1.5	50	103	7	17	8	21	60
80	25, 50	121	111	18	113.5	103.5	12.5	16	21	25	45	45.5	98	M16 x 2.0	62	132	6	22	10	30	77
	75, 100	136	116	19	136	116	19	19											20		
100	25, 50	132.5	120.5	22	125	113	13	23	27	30	48	49	117	M20 x 2.5	71.5	156	6.5	27	12	30	94
	75, 100	147.5	125.5	23	147.5	125.5	23	23											22		

Bore size [mm]	N	O	P	R	RF	W	WL	Z
32	5.5	9	Rc1/8	7	11	49.5	24	14
40	5.5	9	Rc1/8	7	11	57	24	14
50	6.6	11	Rc1/4	8	11	71	24	19
63	9	14	Rc1/4	10.5	11	84	24	19
80	11	17.5*1	Rc3/8	13.5*1	21	104	40	26
100	11	17.5*1	Rc3/8	13.5*1	21	123.5	40	26

*1 At the 75 and 100 mm strokes with ø80, ø100, both ends tapped (A) is the standard. Through-hole (B) is not available.

Both ends tapped

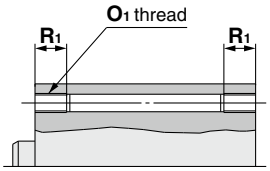

[mm]

Bore size [mm]	O_1	R_1
32	M6 x 1.0	10
40	M6 x 1.0	10
50	M8 x 1.25	14
63	M10 x 1.5	18
80	M12 x 1.75	22
100	M12 x 1.75	22

Rod end male thread

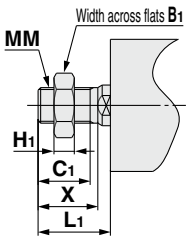

[mm]

Bore size [mm]	Standard stroke	B_1	C_1	H_1	L_1	MM	X
32	10, 15, 20 25, 50 75, 100	22	20.5	8	28.5	M14 x 1.5	23.5
40		22	20.5	8	28.5	M14 x 1.5	23.5
50		27	26	11	33.5	M18 x 1.5	28.5
63		27	26	11	33.5	M18 x 1.5	28.5
80	25, 50	32	32.5	13	43.5	M22 x 1.5	35.5
	75, 100				53.5		
100	25, 50	41	32.5	16	43.5	M26 x 1.5	35.5
	75, 100				53.5		

Dimensions of Each Mounting Bracket

The dimensions of each mounting bracket are the same as those of the standard type, double acting, single rod (except the configuration of the piston rod). Refer to pages 29 to 33.

Auto Switch Mounting

Auto Switch Proper Mounting Position (Detection at stroke end) and Mounting Height

D-F8□

Applicable cylinder series: CDQ2
ø6, ø10

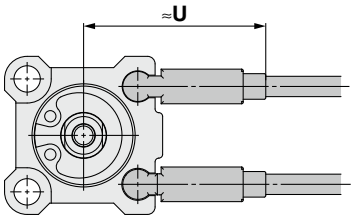

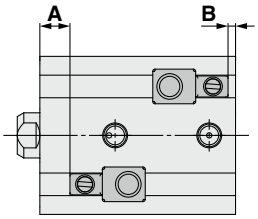

D-M9□
D-M9□V
D-M9□W
D-M9□WV
D-M9□A
D-M9□AV

Applicable cylinder series: CDQ2
ø6, ø10

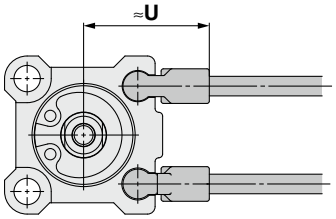

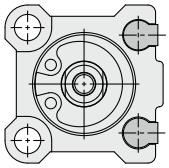

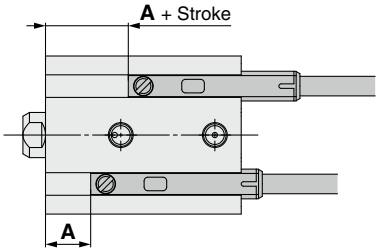

Auto Switch Proper Mounting Position (Detection at stroke end) and Mounting Height

D-M9□
D-M9□V
D-M9□W
D-M9□WV
D-M9□A
D-M9□AV
D-A9□
D-A9□V

Applicable cylinder series: CDQ2, CDQ2W, CDQ2-S/T (Single acting), CDQ2, CDQ2W (Large bore size), CDQ2□S (Anti-lateral load), CDQ2 (Long stroke), CDQ2K, CDQ2KW (Non-rotating rod), CDQ2□R/□V, CDQ2W□R/□V (Water resistant)

ø12 to ø25

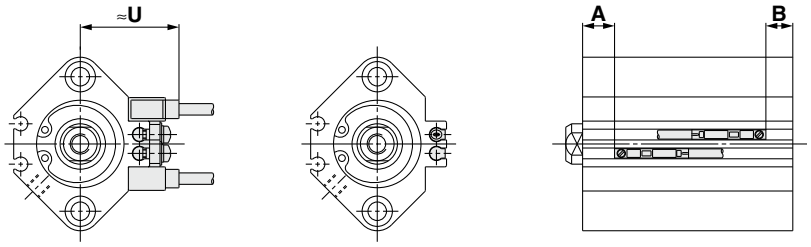

ø32 to ø200

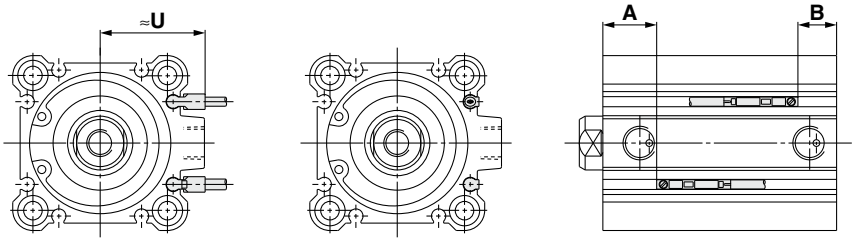

Applicable cylinder series: CDQP2, CDQP2-S/T (Axial piping)

ø12 to ø25

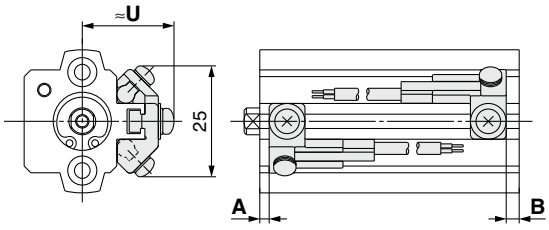

ø32 to ø100

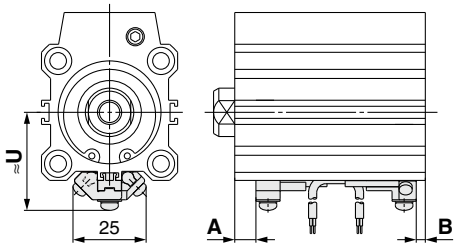

Applicable cylinder series: CDBQ2 (With end lock)

ø20, ø25

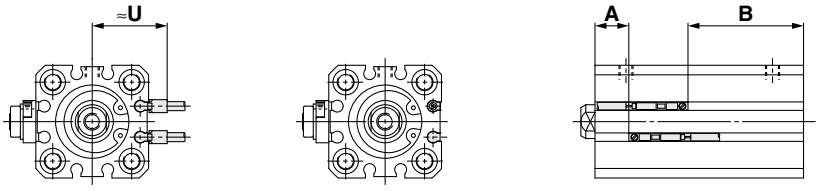

ø32 to ø100

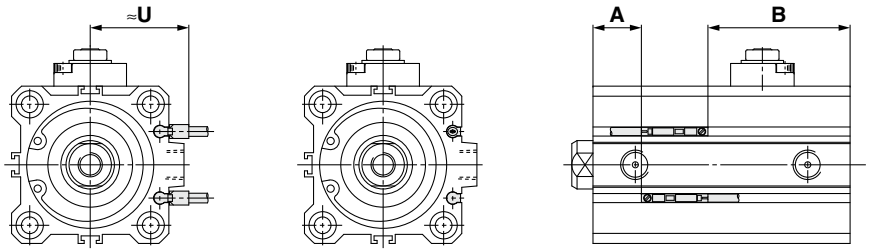

Auto Switch Proper Mounting Position (Detection at stroke end) and Mounting Height

D-A7□	D-F7□V
D-A80	D-J79C
D-A7□H	D-F7□W
D-A80H	D-J79W
D-A73C	D-F7□WV
D-A80C	D-F7BAV
D-F7□	D-F7BA
D-F79F	D-F7NT
D-J79	D-A79W

Applicable cylinder series: CDQ2, CDQ2W, CDQ2-S/T (Single acting), CDQ2, CDQ2W (Large bore size), CDQ2□S (Anti-lateral load), CDQ2 (Long stroke), CDQ2K, CDQ2KW (Non-rotating rod), CDQ2□R/□V, CDQ2W□R/□V (Water resistant)

ø12 to ø25

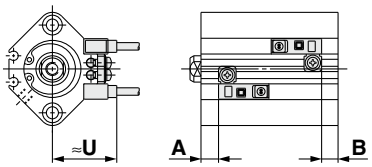

ø32 to ø160

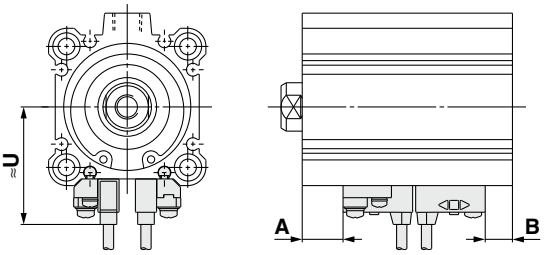

Applicable cylinder series: CDQP2, CDQP2-S/T (Axial piping)

ø12 to ø25

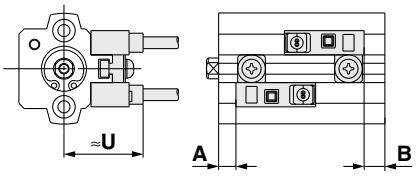

ø32 to ø100

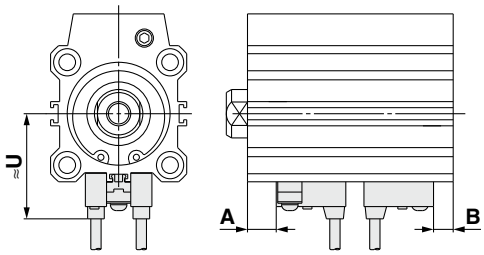

Applicable cylinder series: CDBQ2 (With end lock)

ø32 to ø100

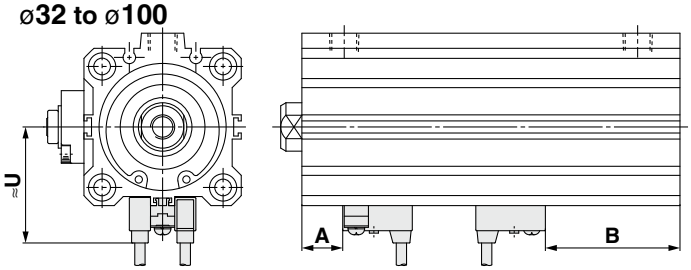

D-P3DWA

Applicable cylinder series: CDQ2, CDQ2W, CDQ2-S/T (Single acting), CDQ2, CDQ2W (Large bore size), CDQ2□S (Anti-lateral load), CDQ2 (Long stroke), CDQ2K, CDQ2KW (Non-rotating rod), CDQ2□R/□V, CDQ2W□R/□V (Water resistant)

ø25

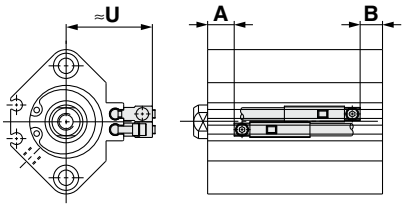

ø32 to ø200

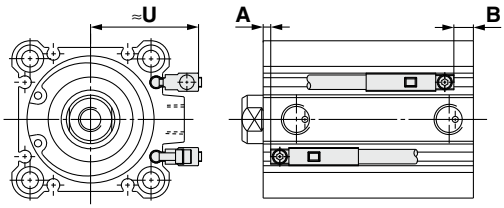

D-P4DW

Applicable cylinder series: CDQP2, CDQP2-S/T (Axial piping)

ø40 to ø100

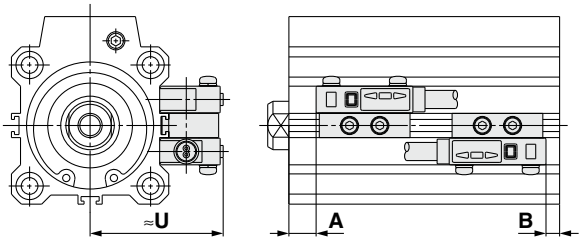

Applicable cylinder series: CDBQ2 (With end lock)

ø40 to ø100

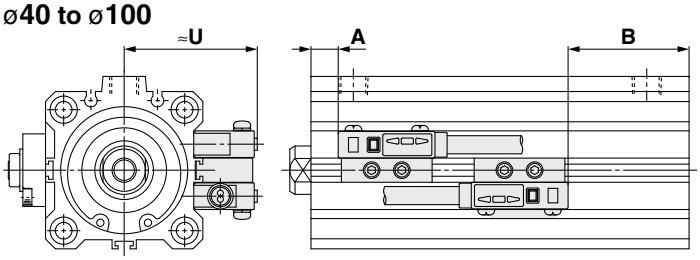

Auto Switch Proper Mounting Position

∗ Adjust the auto switch after confirming the operating conditions in the actual setting.

Applicable Cylinder Series: CDQ2 (Double acting, Single rod)

[mm]

Auto switch model / Bore size	D-F8□		D-M9□ D-M9□V D-M9□W D-M9□WV D-M9□A D-M9□AV
	A	B	A
6	2	1	4
10	4	1	6

Applicable Cylinder Series: CDQ2 (Double acting, Single rod), CDQ2-S/T (Single acting)

[mm]

Auto switch model / Bore size	D-M9□ D-M9□V D-M9□W D-M9□WV D-M9□A D-M9□AV		D-A9□ D-A9□V		D-A73 D-A80		D-A72/A7□H/A80H D-A73C/A80C/F7□ D-F79F/J79/F7□V D-J79C/F7□W D-J79W/F7□WV D-F7BAV/F7BA		D-F7NT		D-A79W		D-P3DWA	
	A	B	A	B	A	B	A	B	A	B	A	B	A	B
12	7.5	8.5 (13)	3.5	4.5 (9)	4.5	5.5 (10)	5	6 (10.5)	10	11 (15.5)	2	3 (7.5)	—	—
16	10.5 (8.5)	8 (10)	6.5 (4.5)	4 (6)	7.5 (5.5)	5 (7)	8	5.5 (7.5)	13 (11)	10.5 (12.5)	5 (3)	2.5 (4.5)	—	—
20	10.5	9	6.5	5	7.5	6	8	6.5	13	11.5	5	3.5	—	—
25	11	9.5	7	5.5	8	6.5	8.5	7	13.5	12	5.5	4	5	3.5
32	12	9	8	5	9	6	9.5	6.5	14.5	11.5	6.5	3.5	7.5	4.5
40	16	11.5	12	7.5	13	8.5	13.5	9	18.5	14	10.5	6	11.5	7
50	14	14.5	10	10.5	11	11.5	11.5	12	16.5	17	8.5	9	9.5	10
63	16.5	17.5	12.5	13.5	13.5	14.5	14	15	19	20	11	12	12	13
80	19.5	22	15.5	18	16.5	19	17	19.5	22	24.5	14	16.5	15	17.5
100	24	27	20	23	21	24	21.5	24.5	26.5	29.5	18.5	21.5	19.5	22.5

∗ ( ): For the single acting, spring extend type
∗ Excludes the D-P3DW for the CDQ2-S/T

Applicable Cylinder Series: CDQ2W (Double acting, Double rod)

[mm]

Auto switch model / Bore size	D-M9□ D-M9□V D-M9□W D-M9□WV D-M9□A D-M9□AV		D-A9□ D-A9□V		D-A73 D-A80		D-A72/A7□H/A80H D-A73C/A80C/F7□ D-F79F/J79/F7□V D-J79C/F7□W D-J79W/F7□WV D-F7BAV/F7BA		D-F7NT		D-A79W		D-P3DWA	
	A	B	A	B	A	B	A	B	A	B	A	B	A	B
12	7.5	13	3.5	9	4.5	10	5	10.5	10	15.5	2	7.5	—	—
16	10.5	13.5	6.5	9.5	7.5	10.5	8	11	13	16	5	8	—	—
20	10.5	15.5	6.5	11.5	7.5	12.5	8	13	13	18	5	10	—	—
25	11	16	7	12	8	13	8.5	13.5	13.5	18.5	5.5	10.5	5	10
32	12	16.5	8	12.5	9	13.5	9.5	14	14.5	19	6.5	11	7.5	12
40	16	22	12	18	13	19	13.5	19.5	18.5	24.5	10.5	16.5	11.5	17.5
50	14	24.5	10	20.5	11	21.5	11.5	22	16.5	27	8.5	19	9.5	20
63	16.5	23.5	12.5	19.5	13.5	20.5	14	21	19	26	11	18	12	19
80	19.5	29.5	15.5	25.5	16.5	26.5	17	27	22	32	14	24	15	25
100	24	34.5	20	30.5	21	31.5	21.5	32	26.5	37	18.5	29	19.5	30

Applicable Cylinder Series: CDQ2, CDQ2W (Large bore size)

[mm]

Auto switch model / Bore size	D-M9□ D-M9□V D-M9□W D-M9□WV D-M9□A D-M9□AV		D-A9□ D-A9□V		D-A73 D-A80		D-A72/A7□H/A80H D-A73C/A80C D-F7□/F7□V D-F79F/F7□W D-F7□WV/J79 D-J79W/J79C D-F7BA D-F7BAV		D-F7NT		D-A79W		D-P3DWA	
	A	B	A	B	A	B	A	B	A	B	A	B	A	B
125	34	34	30	30	32.5	32.5	33	33	38	38	30	30	29.5	29.5
140	34	34	30	30	32.5	32.5	33	33	38	38	30	30	29.5	29.5
160	38	38	34	34	36.5	36.5	37	37	42	42	34	34	33.5	33.5
180	44.5	44.5	40.5	40.5	—	—	—	—	—	—	—	—	40	40
200	47.5	47.5	43.5	43.5	—	—	—	—	—	—	—	—	43	43

Auto Switch Proper Mounting Position

∗ Adjust the auto switch after confirming the operating conditions in the actual setting.

Applicable Cylinder Series: CDQ2□S (Anti-lateral load)

[mm]

Auto switch model / Bore size	D-M9□ D-M9□V D-M9□W D-M9□WV D-M9□A D-M9□AV		D-A9□ D-A9□V		D-A73 D-A80		D-A72/A7□H/A80H D-A73C/A80C/F7□ D-F79F/J79/F7□V D-J79C/F7□W D-J79W/F7□WV D-F7BAV/F7BA		D-F7NT		D-A79W		D-P3DWA	
	A	B	A	B	A	B	A	B	A	B	A	B	A	B
32	18	13	14	9	15	10	15.5	10.5	20.5	15.5	12.5	7.5	13.5	8.5
40	21.5	16	17.5	12	18.5	13	19	13.5	24	18.5	16	10.5	17	11.5
50	19	19.5	15	15.5	16	16.5	16.5	17	21.5	22	13.5	14	14.5	15
63	21.5	22.5	17.5	18.5	18.5	19.5	19	20	24	25	16	17	17	18
80	24.5	27	20.5	23	21.5	24	22	24.5	27	29.5	19	21.5	20	22.5
100	27.5	33.5	23.5	29.5	24.5	30.5	25	31	30	36	22	28	23	29

Applicable Cylinder Series: CDQ2 (Long stroke)

[mm]

Auto switch model / Bore size	D-M9□ D-M9□V D-M9□W D-M9□WV D-M9□A D-M9□AV		D-A9□ D-A9□V		D-A73 D-A80		D-A72/A7□H/A80H D-A73C/A80C/F7□ D-F79F/J79/F7□V D-J79C/F7□W D-J79W/F7□WV D-F7BAV/F7BA		D-F7NT		D-A79W		D-P3DWA	
	A	B	A	B	A	B	A	B	A	B	A	B	A	B
32	12.5	20.5	8.5	16.5	9.5	17.5	10	18	15	23	7	15	8	16
40	16	26.5	12	22.5	13	23.5	13.5	24	18.5	29	10.5	21	11.5	22
50	14	29.5	10	25.5	11	26.5	11.5	27	16.5	32	8.5	24	9.5	25
63	16.5	28.5	12.5	24.5	13.5	25.5	14	26	19	31	11	23	12	24
80	19.5	34.5	15.5	30.5	16.5	31.5	17	32	22	37	14	29	15	30
100	22.5	41	18.5	37	19.5	38	20	38.5	25	43.5	17	35.5	18	36.5

Applicable Cylinder Series: CDQ2K (Non-rotating rod)

[mm]

Auto switch model / Bore size	D-M9□ D-M9□V D-M9□W D-M9□WV D-M9□A D-M9□AV		D-A9□ D-A9□V		D-A73 D-A80		D-A72/A7□H/A80H D-A73C/A80C/F7□ D-F79F/J79/F7□V D-J79C/F7□W D-J79W/F7□WV D-F7BAV/F7BA		D-F7NT		D-A79W		D-P3DWA	
	A	B	A	B	A	B	A	B	A	B	A	B	A	B
12	12.5	8.5	8.5	4.5	9.5	5.5	10	6	15	11	7	3	—	—
16	15.5	8	11.5	4	12.5	5	13	5.5	18	10.5	10	2.5	—	—
20	18.5	9	14.5	5	15.5	6	16	6.5	21	11.5	13	3.5	—	—
25	19	9.5	15	5.5	16	6.5	16.5	7	21.5	12	13	4	13	3.5
32	21	9	17	5	18	6	18.5	6.5	23.5	11.5	15.5	3.5	16.5	4.5
40	16	11.5	12	7.5	13	8.5	13.5	9	18.5	14	10.5	6	11.5	7
50	14	14.5	10	10.5	11	11.5	11.5	12	16.5	17	8.5	9	9.5	10
63	16.5	17.5	12.5	13.5	13.5	14.5	14	15	19	20	11	12	12	13

Applicable Cylinder Series: CDQ2KW (Non-rotating rod, Double rod)

[mm]

Auto switch model / Bore size	D-M9□ D-M9□V D-M9□W D-M9□WV D-M9□A D-M9□AV		D-A9□ D-A9□V		D-A73 D-A80		D-A72/A7□H/A80H D-A73C/A80C/F7□ D-F79F/J79/F7□V D-J79C/F7□W D-J79W/F7□WV D-F7BAV/F7BA		D-F7NT		D-A79W		D-P3DWA	
	A	B	A	B	A	B	A	B	A	B	A	B	A	B
12	13	13	9	9	9.5	10	10	10.5	15	15.5	7.5	7.5	—	—
16	15.5	13.5	11.5	9.5	12.5	10.5	13	11	18	16	10	8	—	—
20	18.5	15.5	14.5	11.5	15.5	12.5	16	13	21	18	13	10	—	—
25	19	16	15	12	16	13	16.5	13.5	21.5	18.5	13.5	10.5	13	10
32	21	16.5	17	12.5	18	13.5	18.5	14	23.5	19	15.5	11	16.5	12
40	16	22	12	18	13	19	13.5	19.5	18.5	24.5	10.5	16.5	11.5	17.5
50	14	24.5	10	20.5	11	21.5	11.5	22	16.5	27	8.5	19	9.5	20
63	16.5	23.5	12.5	19.5	13.5	20.5	14	21	19	26	11	18	12	19

Auto Switch Proper Mounting Position

∗ Adjust the auto switch after confirming the operating conditions in the actual setting.

Applicable Cylinder Series: CDQ2□R/□V (Water resistant)

[mm]

Auto switch model / Bore size	D-M9□A D-M9□AV		D-F7BA D-F7BAV	
	A	B	A	B
20	19	7.5	18	6.5
25	19.5	8	18	7
32	22	9	19.5	6.5
40	16	11.5	13.5	9
50	14	14.5	11.5	12
63	16.5	17.5	14	15
80	19.5	22	17	19.5
100	24	27	21.5	24.5

Applicable Cylinder Series: CDQ2W□R/□V (Water resistant, Double rod)

[mm]

Auto switch model / Bore size	D-M9□A D-M9□AV		D-F7BA D-F7BAV	
	A	B	A	B
40	16	22	13.5	19.5
50	14	24.5	11.5	22
63	16.5	23.5	14	21
80	19.5	29.5	17	27
100	24	34.5	21.5	32

Applicable Cylinder Series: CDQP2 (Axial piping), CDQP2-S/T (Axial piping, Single acting)

[mm]

Auto switch model / Bore size	D-M9□ D-M9□V D-M9□W D-M9□WV D-M9□A D-M9□AV		D-A9□ D-A9□V		D-A73 D-A80		D-A72/A7□H/A80H D-A73C/A80C/F7□ D-F79F/J79/F7□V D-J79C/F7□W D-J79W/F7□WV D-F7BAV/F7BA		D-F7NT		D-A79W		D-P4DW	
	A	B	A	B	A	B	A	B	A	B	A	B	A	B
12	6	7 (11)	2	3 (7)	4.5	5.5 (10)	5	6 (10.5)	10	11 (15.5)	2	3 (7.5)	—	—
16	9 (7)	6.5 (8.5)	5 (3)	2.5 (4.5)	7.5 (5.5)	5 (7)	8 (6)	5.5 (7.5)	13 (11)	10.5 (12.5)	5 (3)	2.5 (4.5)	—	—
20	9	7.5	5	3.5	7.5	6.5	8	7	13	12	5	4	—	—
25	9.5	8	5.5	4	7.5	7	8	7.5	13	12.5	5	4.5	—	—
32	10.5	7.5	6.5	3.5	9	6	9.5	6.5	14.5	11.5	6.5	3.5	—	—
40	14.5	10	10.5	6	13	8.5	13.5	9	18.5	14	10.5	6	9	4.5
50	12.5	13	8.5	9	11	11.5	11.5	12	16.5	17	8.5	9	7	7.5
63	15	16	11	12	13.5	14.5	14	15	19	20	11	12	9.5	10.5
80	18	20.5	14	16.5	17.5	18	18	18.5	23	23.5	15	15.5	13.5	14
100	22.5	25.5	18.5	21.5	21	24	21.5	24.5	26.5	29.5	18.5	21.5	17	20

∗ ( ): For the single acting, spring extend type
∗ Excludes the D-P4DW for the CDQP2-S/T

Auto Switch Proper Mounting Position

∗ Adjust the auto switch after confirming the operating conditions in the actual setting.

Applicable Cylinder Series: CDBQ2 (With end lock)

[mm]

Auto switch model / Bore size	D-M9□ D-M9□V D-M9□W D-M9□WV D-M9□A D-M9□AV		D-A9□ D-A9□V		D-A7□ D-A80		D-A7□H/A80H D-A73C/A80C D-F7□/F79F/J79 D-F7□V/J79C D-F7□W/J79W D-F7□WV/F7BA D-F7BAV/F7NT		D-A79W		D-P4DW	
	A	B	A	B	A	B	A	B	A	B	A	B
20 (Head end lock)	10 (11)	39 (43)	6 (7)	35 (39)	—	—	—	—	—	—	—	—
20 (Rod end lock)	35.5 (38)	7 (16)	31.5 (34)	3 (12)	—	—	—	—	—	—	—	—
25 (Head end lock)	12 (14)	41 (43)	8 (10)	37 (39)	—	—	—	—	—	—	—	—
25 (Rod end lock)	36 (39)	9.5 (18)	32 (35)	5.5 (14)	—	—	—	—	—	—	—	—
32 (Head end lock)	12	41.5	8	37.5	9	38.5	9.5	39	6.5	36	—	—
32 (Rod end lock)	39	7	35	3	36	4	36.5	4.5	33.5	1.5	—	—
40 (Head end lock)	16	47	12	43	13	44	13.5	44.5	10.5	41.5	9	40
40 (Rod end lock)	45	7.5	41	3.5	42	4.5	42.5	5	39.5	2	38	0.5
50 (Head end lock)	14	49.5	10	45.5	11	46.5	11.5	47	8.5	44	7	42.5
50 (Rod end lock)	44.5	9	40.5	5	41.5	6	42	6.5	39	3.5	37.5	2
63 (Head end lock)	16.5	48.5	12.5	44.5	13.5	45.5	14	46	11	43	9.5	41.5
63 (Rod end lock)	48.5	10.5	44.5	6.5	45.5	7.5	46	8	43	5	41.5	3.5
80 (Head end lock)	19.5 (24.5)	79.5 (79.5)	15.5 (20.5)	75.5 (75.5)	16.5 (21.5)	76.5 (76.5)	17 (22)	77 (77)	14 (19)	74 (74)	12.5 (17.5)	72.5 (72.5)
80 (Rod end lock)	69.5 (69.5)	22 (34.5)	65.5 (65.5)	18 (30.5)	66.5 (66.5)	19 (31.5)	67 (67)	19.5 (32)	64 (64)	16.5 (29)	62.5 (62.5)	15 (27.5)
100 (Head end lock)	24 (29)	84.5 (84.5)	20 (25)	80.5 (80.5)	21 (26)	81.5 (81.5)	21.5 (26.5)	82 (82)	18.5 (23.5)	79 (79)	17 (22)	77.5 (77.5)
100 (Rod end lock)	74 (72.5)	27 (41)	70 (68.5)	23 (37)	71 (69.5)	24 (38)	71.5 (70)	24.5 (38.5)	68.5 (67)	21.5 (35.5)	67 (65.5)	20 (34)

∗ The dimensions in parentheses for ø20 and ø25 are for 50, 75 and 100 mm strokes, and the dimensions in parentheses for ø80 and ø100 are for 75 and 100 mm strokes.

Auto Switch Mounting Height

∗ Adjust the auto switch after confirming the operating conditions in the actual setting.

Applicable Cylinder Series: CDQ2, CDQ2W, CDQ2-S/T (Single acting), CDQ2□S (Anti-lateral load), CDQ2 (Long stroke), CDQ2K, CDQ2KW (Non-rotating rod), CDQ2□R/□V, CDQ2W□R/□V (Water resistant)

[mm]

Auto switch model / Bore size	D-M9□V D-M9□WV D-M9□AV	D-A9□V	D-F7□/J79 D-F7□W/J79W D-F7BA D-F79F/F7NT D-A7□H/A80H	D-F7□V D-F7□WV D-F7BAV	D-J79C	D-A7□ D-A80	D-A73C D-A80C	D-A79W	D-P3DWA
	U	U	U	U	U	U	U	U	U
12	21.5	19	21.5	23.5	26.5	21	27.5	24.5	—
16	22.5	20	22.5	24.5	27.5	22	28.5	25.5	—
20	25	23	25.5	27.5	30	24.5	31	28	—
25	28	26	28	30.5	32.5	27.5	34	31	33.5
32	30	27.5	36	36.5	39.5	34	40.5	37.5	35.5
40	32	30	38	40	42.5	37.5	43.5	40.5	38
50	37.5	35	43.5	45	48	43	49	46	43
63	42.5	40.5	48.5	50.5	53.5	48	54.5	51.5	48
80	51	49	57	59	61.5	56.5	62.5	59.5	56.5
100	59	57	65.5	67	70	64.5	71	68	65

∗ The applicable auto switches for the CDQ2□R/□V (water resistant) are the D-M9□A(V) type only.
∗ Excludes the D-P3DW for the CDQ2-S/T (Single acting)

Applicable Cylinder Series: CDQ2, CDQ2W (Large bore size)

[mm]

Auto switch model / Bore size	D-M9□V D-M9□WV D-M9□AV	D-A9□V	D-F7□/J79 D-F7□W/J79W D-F7BA D-F79F/F7NT D-A7□H/A80H	D-F7□V D-F7□WV D-F7BAV	D-J79C	D-A7□ D-A80	D-A73C D-A80C	D-A79W	D-P3DWA
	U	U	U	U	U	U	U	U	U
125	69.5	67.5	76.5	79	81	75.5	82.5	78	77
140	76.5	74.5	83.5	86	88	82.5	89.5	85	84
160	85.5	83.5	92.5	95	97	91.5	98.5	94	93
180	105.5	103.5	—	—	—	—	—	—	102
200	112.5	110.5	—	—	—	—	—	—	110

Auto Switch Mounting Height

∗ Adjust the auto switch after confirming the operating conditions in the actual setting.

Applicable Cylinder Series: CDQ2 (Double acting, Single rod)

[mm]

Auto switch model / Bore size	D-F8□	D-M9□ D-M9□V D-M9□W D-M9□WV D-M9□A D-M9□AV
	U	U
6	22	14.5
10	24.5	17

Applicable Cylinder Series: CDQP2, CDQP2-S/T (Axial piping)

[mm]

Auto switch model / Bore size	D-M9□ D-M9□V D-M9□W D-M9□WV D-M9□A D-M9□AV D-A9□ D-A9□V	D-A7□H D-A80H D-F7□ D-F79F D-J79 D-F7□W D-J79W D-F7BA D-F7NT	D-F7□V D-F7□WV D-F7BAV	D-J79C	D-A7□ D-A80	D-A73C D-A80C	D-A79W	D-P4DW
	U	U	U	U	U	U	U	U
12	20.5	20.5	23	26	19.5	26.5	22	—
16	23.5	23.5	26	29	22.5	29.5	25	—
20	25.5	25.5	28	31	24.5	31.5	27	—
25	28.5	28.5	31	34	27.5	34.5	30	—
32	32.5	32.5	35	38	31.5	38.5	34	—
40	36	36	38.5	41.5	35	42	37.5	44
50	42	42	44.5	47.5	41	48	43.5	50
63	48.5	48.5	51	54	47.5	54.5	50	56.5
80	58.5	58.5	61	64	57.5	64.5	60	66.5
100	68.5	68.5	71	74	67.5	74.5	70	76.5

∗ Excludes the D-P4DW for the CDQP2-S/T (Single acting)

Applicable Cylinder Series: CDBQ2 (With end lock)

[mm]

Auto switch model / Bore size	D-M9□V D-M9□WV D-M9□AV	D-A9□V	D-A7□H D-A80H/F7□ D-F79F/J79 D-F7□W/J79W D-F7BA/F7NT	D-F7□V D-F7□WV D-F7BAV	D-J79C	D-A7□ D-A80	D-A73C D-A80C	D-A79W	D-P4DW
	U	U	U	U	U	U	U	U	U
20	24.5	22.5	—	—	—	—	—	—	—
25	26.5	24.5	—	—	—	—	—	—	—
32	29	27	32.5	35	38	31.5	38.5	34	—
40	32.5	30.5	36	38.5	41.5	35	42	37.5	44
50	38.5	36.5	42	44.5	47.5	41	48	43.5	50
63	42	40	48.5	51	54	47.5	54.5	50	56.5
80	52	50	58.5	61	64	57.5	64.5	60	66.5
100	62	60	68.5	71	74	67.5	74.5	70	76.5

Minimum Stroke for Auto Switch Mounting

∗ Adjust the auto switch after confirming the operating conditions in the actual setting.

Applicable Cylinder Series: CDQ2

[mm]

Number of auto switches	D-F8□ D-M9□ D-M9□V	D-M9□W D-M9□WV D-M9□A D-M9□AV
With 1 pc.	5	5
With 2 pcs.	5	10

∗ The table above is for the CDQ2B6/10.

Applicable Cylinder Series: CDQ2, CDQ2W, CDQ2-S/T (Single acting), CDQ2□S (Anti-lateral load), CDQ2 (Long stroke), CDQ2K, CDQ2KW (Non-rotating rod), CDQ2□R/□V, CDQ2W□R/□V (Water resistant), CDQP2, CDQP2-S/-T (Axial piping), CDBQ2 (With end lock)

[mm]

Number of auto switches	D-M9□V D-F7□V D-J79C	D-A9□V D-A7□ D-A80 D-A73C D-A80C	D-A9□	D-M9□WV D-M9□AV D-F7□WV D-F7BAV	D-M9□ D-F7□ D-J79	D-M9□W D-M9□A	D-A7□H D-A80H	D-A79W	D-F7□W D-J79W D-F7BA D-F79F D-F7NT	D-P3DWA	D-P4DW
With 1 pc.	5	5	10 (5)	10	15 (5)	15 (10)	15 (5)	15	20 (10)	15	15
With 2 pcs.	5	10	10	15	15 (5)	15	15 (10)	20	20 (15)	15	15

∗ The applicable auto switches for the CDQ2□R/□V (water resistant) are the D-M9□A(V) type only.

Applicable Cylinder Series: CDQ2, CDQ2W (Large bore size)

[mm]

Number of auto switches	D-M9□ D-M9□V D-F7□ D-F7□V D-J79 D-J79C	D-A9□ D-A9□V D-A7□ D-A80 D-A73C D-A80C D-A7□H D-A80H	D-M9□W D-M9□WV D-M9□A D-M9□AV D-F7□W D-F7□WV D-J79W D-F7BA D-F7BAV D-F7NT D-F79F D-P3DWA	D-A79W
With 1 pc.	5	5	10	15
With 2 pcs.	5	10	15	20

∗ The dimension stated in ( ) shows the minimum stroke for the auto switch mounting when the auto switch does not project from the end surface of the cylinder body and hinder the lead wire bending space. (Refer to the figure below.)
The auto switch and auto switch mounting bracket are ordered separately.

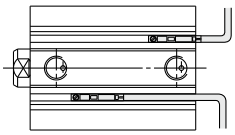

∗ The applicable auto switch for the CDQP2 and CDBQ2 (With end lock) is the D-P4DW type only.
∗ Excludes the D-P4DW for the CDQP2-S/T (Single acting)

Operating Range

∗ Adjust the auto switch after confirming the operating conditions in the actual setting.

Applicable Cylinder Series: CDQ2

[mm]

Auto switch model	Bore size	
	6	10
D-F8□	2	2.5
D-M9□(V) D-M9□W(V) D-M9□A(V)	3	3.5

∗ Values which include hysteresis are for reference purposes only. They are not a guarantee (assuming approximately ±30% dispersion) and may change substantially depending on the ambient environment.

Applicable Cylinder Series: CDQ2, CDQ2W, CDQ2-S/T (Single acting), CDQ2□S (Anti-lateral load), CDQ2 (Long stroke), CDQ2K, CDQ2KW (Non-rotating rod), CDQ2□R/□V, CDQ2W□R/□V (Water resistant)

[mm]

Auto switch model	Bore size														
	12	16	20	25	32	40	50	63	80	100	125	140	160	180	200
D-M9□(V) D-M9□W(V) D-M9□A(V)	3	5	5.5	5.5	5	5	6	6.5	7	7.5	7.5	8	7.5	7.5	8.5
D-A9□(V)	7.5	9.5	10	9	9	9.5	9.5	11	10.5	10.5	13.5	12.5	12	13	12.5
D-A7□(H)(C) D-A80□(H)(C)	9.5	12	12	11	10.5	11.5	11	13	11.5	11.5	16.5	15	14.5	—	—
D-A79W	13	14.5	15.5	14	14	15.5	14.5	17	15	15.5	19.5	18	17.5	—	—
D-F7□(V) D-J79(C) D-F7□W(V) D-F7BA(V) D-F7NT D-F79F	4.5	5.5	5	5	5	5	5	6	7	8	7.5	7.5	7.5	—	—
D-P3DWA	—	—	—	5.5	6	6	7	7.5	7.5	7.5	8.5	8.5	9	8	8.5

∗ Values which include hysteresis are for reference purposes only. They are not a guarantee (assuming approximately ±30% dispersion) and may change substantially depending on the ambient environment.
∗ The applicable auto switches for the CDQ2□R/□V (water resistant) are the D-M9□A(V) type only.
∗ Excludes the D-P3DW for the CDQ2-S/T (Single acting)

Applicable Cylinder Series: CDQP2, CDQP2-S/T (Axial piping)

[mm]

Auto switch model	Bore size									
	12	16	20	25	32	40	50	63	80	100
D-M9□(V) D-M9□W(V) D-M9□A(V)	3.5	5	5	5	5.5	5.5	6	6.5	7	7
D-A9□(V)	7.5	9.5	9	9	9.5	9.5	8.5	11	10	10.5
D-A7□(H)(C) D-A80□(H)(C)	10	12	12	12	12	11	10	12	12	13
D-A79W	13	13	13	13	13	14	14	16	15	17
D-F7□(V) D-J79(C) D-F7□W(V) D-F7BA(V) D-F7NT D-F79F	5.5	6	5.5	5	6	6	6	6.5	6.5	7
D-P4DW	—	—	—	—	—	5	5	5	5	5.5

∗ Values which include hysteresis are for reference purposes only. They are not a guarantee (assuming approximately ±30% dispersion) and may change substantially depending on the ambient environment.
∗ Excludes the D-P4DW for the CDQP2-S/T (Single acting)

Operating Range

∗ Adjust the auto switch after confirming the operating conditions in the actual setting.

Applicable Cylinder Series: CDBQ2 (With end lock)

[mm]

Auto switch model	Bore size							
	20	25	32	40	50	63	80	100
D-M9□(V) D-M9□W(V) D-M9□A(V)	5.5	5.5	6 (5.5)	6 (5.5)	7 (6)	7.5 (6.5)	8 (7)	8.5 (7)
D-A9□(V)	10	10	9.5 (9.5)	9.5 (9.5)	9.5 (8.5)	11.5 (11)	9 (10)	11.5 (10.5)
D-A7□(H)(C) D-A80□(H)(C)	—	—	12	11	10	12	12	13
D-A79W	—	—	13	14	14	16	15	17
D-F7□(V) D-J79(C) D-F7□W(V) D-F7BA(V) D-F7NT D-F79F	—	—	6	6	6	6.5	6.5	7
D-P4DW	—	—	—	5	5	5	5	5.5

∗ Values which include hysteresis are for reference purposes only. They are not a guarantee (assuming approximately ±30% dispersion) and may change substantially depending on the ambient environment.

∗ The auto switch mounting bracket BQ2-012 is not used for ø32 or more of the D-A9□(V)/M9□(V)/M9□W(V)/M9□A(V) types. The values above indicate the operating range when mounted with the existing auto switch installation groove.

∗ The values in parentheses for ø32 or more of the D-A9□(V)/M9□(V)/M9□W(V)/M9□A(V) types indicate the operating range when the auto switch mounting bracket BQ2-012 is used.

Auto Switch Mounting Brackets/Part Nos.

Applicable Cylinder Series: CDQ2, CDQ2W, CDQ2-S/T (Single acting), CDQ2, CDQ2W (Large bore size), CDQ2□S (Anti-lateral load), CDQ2 (Long stroke), CDQ2K, CDQ2KW (Non-rotating rod), CDQ2□R/□V, CDQ2W□R/□V (Water resistant)

Applicable auto switch	D-F8□	D-M9□/M9□V D-M9□W/M9□WV D-M9□A/M9□AV D-A9□/A9□V	D-F7□/F7□V/J79/J79C/F7□W/J79W/F7□WV D-F7BA/F7BAV/F79F/F7NT D-A7□/A80/A7□H/A80H/A73C/A80C/A79W		D-P3DWA
Bore size [mm]	ø6, ø10	ø6 to ø200	ø12 to ø25	ø32 to ø160	ø25 to ø200
Auto switch mounting bracket part no.	—	—	BQ4-012	BQ5-032	—
Auto switch mounting bracket fitting parts lineup/Weight	—	—	• Auto switch mounting screw (M2.5 x 8 L) • Auto switch mounting nut Weight: 1.5 g	• Auto switch fixing screw (M2.5 x 10 L) • Auto switch mounting screw (M3 x 8 L) • Auto switch spacer • Auto switch mounting nut Weight: 3.5 g	—
			When requesting the enclosure of the auto switch mounting brackets (2 pcs.) with the cylinder for shipment, add "-BQ" to the end of the cylinder model number. Standard model no. +**BQ** Example) CDQ2B32-30DZ-**BQ**/ CDQ2B32-30DZ-**BQ**-XC4 (Made to order)		
Auto switch mounting surface	Surfaces with auto switch mounting slot 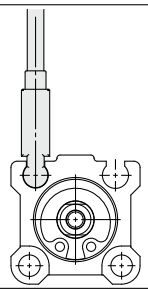	Surfaces with auto switch mounting slot ø6, ø10 ø12 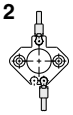 ø16 to ø25 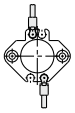 ø32 to ø200 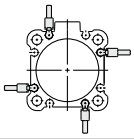	Auto switch mounting rail side only ø12 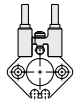 ø16 to ø25 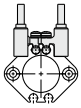	A/B/C side except port side Port side 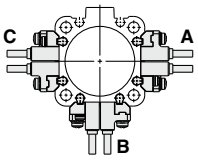 	Surfaces with auto switch mounting slot 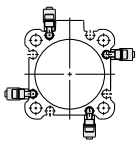
Mounting of auto switch	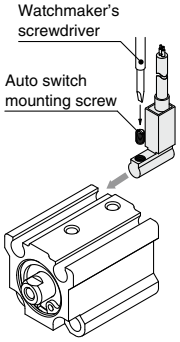 • When tightening an auto switch mounting screw, use a watchmaker's screwdriver with a handle diameter of 5 to 6 mm. **Tightening torque for auto switch mounting screw** [N·m] Auto switch model: D-F8□; Tightening torque: 0.10 to 0.20	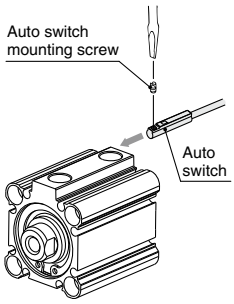 • When tightening an auto switch mounting screw, use a watchmaker's screwdriver with a handle diameter of 5 to 6 mm. **Tightening torque for auto switch mounting screw** [N·m] Auto switch model: D-M9□(V), D-M9□W(V), D-A9□(V); Tightening torque: 0.05 to 0.15 Auto switch model: D-M9□A(V); Tightening torque: 0.05 to 0.10	① Insert the nut into the auto switch mounting slot on the cylinder tube, and place it in the roughly estimated setting position. ② Engage the ridge on the auto switch mounting arm with the recess in the cylinder tube rail, and slide it to the position of the nut. ③ Gently screw the auto switch mounting screw into the thread of the auto switch mounting nut through the mounting hole on the auto switch mounting arm. ④ Confirm where the mounting position is, and tighten the auto switch mounting screw to fix the auto switch. The tightening torque of the M2.5 screw must be 0.25 to 0.35 N·m. ⑤ The detection position can be changed under the conditions in step ③. 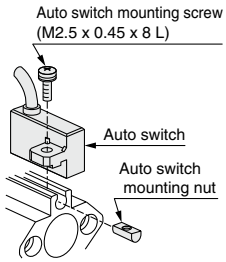 	① Insert the nut into the auto switch mounting slot on the cylinder tube, and place it in the roughly estimated setting position. ② With the lower tapered part of the auto switch spacer facing the outside of the cylinder tube, line up the M2.5 through hole with the M2.5 female thread of the auto switch mounting nut. ③ Gently screw the auto switch mounting nut fixing screw (M2.5) into the thread of the auto switch mounting nut through the mounting hole. ④ Engage the ridge on the auto switch mounting arm with the recess i n the auto switch spacer. ⑤ Tighten the auto switch mounting screw (M3) to fix the auto switch. The tightening torque of the M3 screw must be 0.35 to 0.45 N·m. ⑥ Confirm where the mounting position is, and tighten the auto switch fixing screw (M2.5) to fix the auto switch mounting nut. The tightening torque of the M2.5 screw must be 0.25 to 0.35 N·m. ⑦ The detection position can be changed under the conditions in step ⑤. 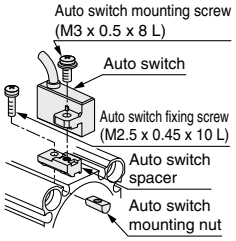 	① Insert the mounting bracket into the mating groove of the cylinder tube. ② Check the detecting position of the auto switch and fix the auto switch firmly with the hexagon socket head cap screw (M2.5 x 12 L). ③ If the detecting position is changed, go back to step ①. ∗ Ensure that the auto switch is covered with the mating groove to protect the auto switch. ∗ The tightening torque for the hexagon socket head cap screw (M2.5 x 12 L) is 0.2 to 0.3 N·m. 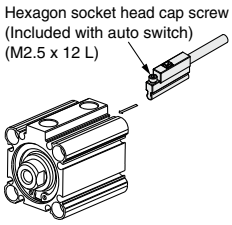

∗ Auto switch mounting bracket and auto switch are enclosed with the cylinder for shipment. For an environment that needs the water-resistant auto switch, select the D-M9□A(V) type. Auto switch mounting bracket for the D-F7BA(V) type uses BQ4-012 and BQ5-032 normal specifications (metal screw).
∗ The applicable auto switches for the CDQ2□R/□V (water resistant) are the D-M9□A(V) type.
∗ The applicable auto switches for the CDQ2-S/T (single acting) are those except for the D-P3DW type.

Auto Switch Mounting Brackets/Part Nos.

Applicable Cylinder Series: CDQP2, CDQP2-S/T (Axial piping)

Applicable auto switch	D-M9□/M9□V D-M9□W/M9□WV D-M9□A/M9□AV D-A9□/A9□V	
Bore size [mm]	ø12 to ø25	ø32 to ø100
Auto switch mounting bracket part no.	① BQ-1 ② BQ2-012 Two types of auto switch mounting brackets are used as a set.	① BQ-2 ② BQ2-012 Two types of auto switch mounting brackets are used as a set.
Auto switch mounting bracket fitting parts lineup/Weight	① BQ-1 • Cross recessed round head screw (M3 x 8 L) • Square nut (M3 x 0.5) Weight: 1.5 g ② BQ2-012 • Cross recessed round head screw (M2.5 x 6 L) • Auto switch mounting bracket Weight: 5 g	① BQ-2 • Cross recessed round head screw (M3 x 10 L) • Square nut (M3 x 0.5) • Switch spacer Weight: 1.5 g ② BQ2-012 • Cross recessed round head screw (M2.5 x 6 L) • Auto switch mounting bracket Weight: 5 g
Auto switch mounting surface	Auto switch mounting rail side only	A/B/C side
	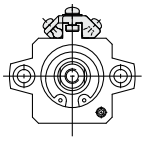	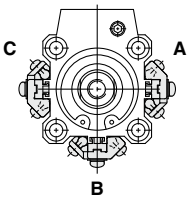
Mounting of auto switch	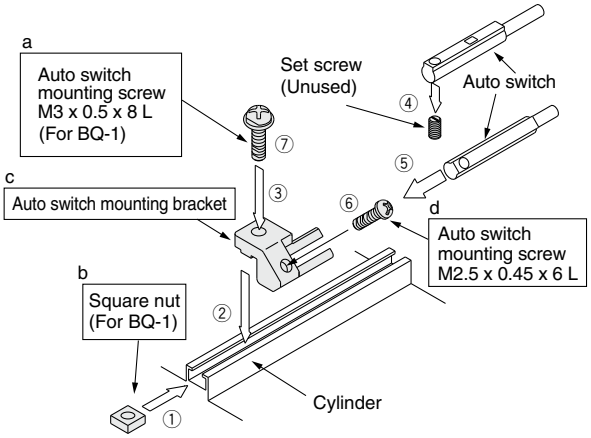 • BQ-1 is a set of a and b shown above. • BQ2-012 is a set of c and d shown above. ① Insert the square nut for BQ-1 in the switch mounting rail and set it at the approximate auto switch mounting position. ② Fit the convex part of the auto switch mounting bracket arm over the concave part of the rail, and slide the arm to the nut position. ③ Push the auto switch mounting screw (M3 for BQ-1) lightly into the square nut through the hole of the auto switch mounting arm. ④ Remove the set screw (M2.5) attached to the auto switch. ⑤ Insert the auto switch in the auto switch attachment part of the auto switch mounting bracket. ⑥ Secure the auto switch mounting screw (M2.5). (Tightening torque of M2.5 screw: 0.1 to 0.2 N·m) ⑦ Secure the auto switch mounting screw ③ after confirming the detecting position. (Tightening torque of M3 screw: 0.5 to 0.7 N·m) ⑧ Modify the detecting position while the auto switch is secured at the position of ③ in the figure.	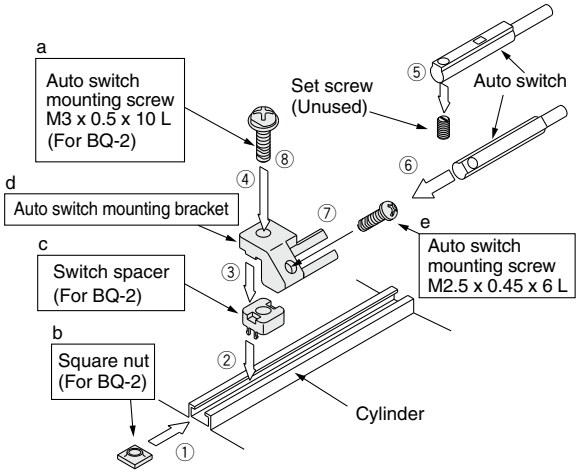 • BQ-2 is a set of a, b, and c shown above. • BQ2-012 is a set of d and e shown above. ① Insert the square nut for BQ-2 in the switch mounting rail and set it at the approximate auto switch mounting position. ② Fit the protruding part of the switch mounting spacer over the concave part of the rail, and slide the spacer to the nut position. ③ Fit the convex part of the auto switch mounting bracket arm over the concave part of the switch spacer. ④ Turn the auto switch mounting screw (M3 for BQ-2) lightly into the square nut through the mounting holes of the auto switch mounting arm and switch spacer. ⑤ Remove the set screw (M2.5) attached to the auto switch. ⑥ Insert the auto switch in the auto switch attachment part of the auto switch mounting bracket. ⑦ Secure the auto switch mounting screw (M2.5). (Tightening torque of M2.5 screw: 0.1 to 0.2 N·m) ⑧ Secure the auto switch mounting screw ④ after confirming the detecting position. (Tightening torque of M3 screw: 0.5 to 0.7 N·m) ⑨ Modify the detecting position while the auto switch is secured at the position of ④ in the figure.

Auto Switch Mounting Brackets/Part Nos.

Applicable Cylinder Series: CDQP2, CDQP2-S/T (Axial piping)

Applicable auto switch	D-F7□/F7□V/J79/J79C/F7□W/J79W/F7□WV D-F7BA/F7BAV/F79F/F7NT D-A7□/A80/A7□H/A80H/A73C/A80C/A79W		D-P4DW
Bore size [mm]	ø12 to ø25	ø32 to ø100	ø40 to ø100
Auto switch mounting bracket part no.	BQ-1	BQ-2	BQP1-050
Auto switch mounting bracket fitting parts lineup/Weight	• Cross recessed round head screw (M3 x 8 L) • Square nut (M3 x 0.5) Weight: 1.5 g	• Cross recessed round head screw (M3 x 10 L) • Square nut (M3 x 0.5) • Switch spacer Weight: 1.5 g	• Cross recessed round head screw (M3 x 16 L) • Hexagon socket head cap screw (M3 x 14 L) • Auto switch mounting nut • Auto switch mounting bracket Weight: 16 g
Auto switch mounting surface	Auto switch mounting rail side only	A/B/C side	A/B/C side
	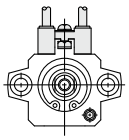	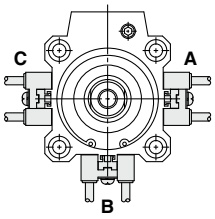	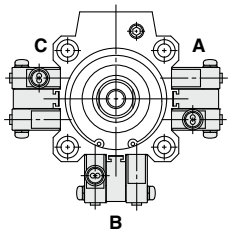
Mounting of auto switch	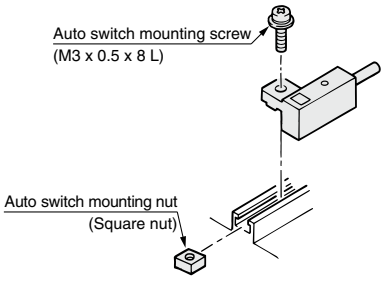 ① Slide the auto switch mounting nut inserted into the mounting rail and set it at the auto switch mounting position. ② Fit the convex part of auto switch mounting arm into the concave part of auto switch mounting rail. Then slide the switch over the nut. ③ Push the auto switch mounting screw lightly into the mounting nut through the hole of auto switch mounting arm. ④ After reconfirming the detecting position, tighten the mounting screw to secure the auto switch. (Tightening torque of M3 screw should be 0.5 to 0.7 N·m.) ⑤ Modification of the detecting position should be made in the condition of ③.	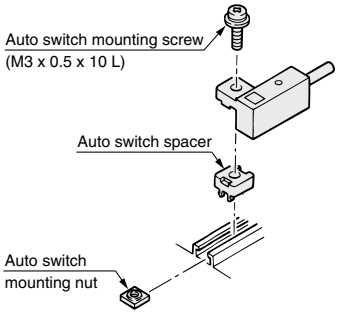 ① Slide the auto switch mounting nut inserted into the mounting rail and set it at the auto switch mounting position. ② Fit the convex part of auto switch mounting arm into the concave part of auto switch spacer. Then slide the switch over the nut. ③ Push the auto switch mounting screw lightly into the mounting nut through the holes of the auto switch mounting arm and auto switch spacer. ④ After reconfirming the detecting position, tighten the mounting screw to secure the auto switch. (Tightening torque of M3 screw should be 0.5 to 0.7 N·m.) ⑤ Modification of the detecting position should be made in the condition of ③.	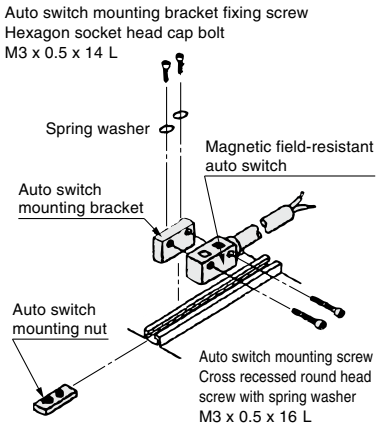 ① Mount the auto switch mounting bracket onto the auto switch mounting nut by tightening bracket fixing screw lightly through the mounting hole on the top of bracket. ② Insert the auto switch mounting bracket assembly (bracket + nut) into the mounting groove and set it at the auto switch mounting position. ③ Push the auto switch mounting screw lightly into the auto switch through the auto switch mounting hole to secure. ④ After reconfirming the detecting position, tighten the mounting screw to secure the auto switch mounting bracket and the auto switch. (Tightening torque should be 0.5 to 0.7 N·m.)

[Stainless Steel Mounting Screw Kit]

The following stainless steel mounting screw kit (with nuts) is available. Use it in accordance with the operating environment. (Since auto switch spacer (for BQ-2) is not included, order BQ-2 separately.)

BBA2: For D-A7/A8/F7/J7 types

The above stainless steel screws are used when a cylinder is shipped with the D-F7BA/F7BAV auto switches.

When only one auto switch is shipped independently, the BBA2 is attached.

∗ Refer to the **Web Catalog** for details on the BBA2.

∗ When the D-M9□A(V) type is mounted, order auto switch mounting brackets BQ2-012S, BQ-2, and the stainless steel mounting screw kit BBA2 separately.

Auto Switch Mounting Brackets/Part Nos.

Applicable Cylinder Series: CDBQ2 (With end lock)

Applicable auto switch	D-M9□/M9□V D-M9□W/M9□WV D-M9□A/M9□AV D-A9□/A9□V			
Bore size [mm]	ø20, ø25	ø32, ø40, ø50		ø63, ø80, ø100
Auto switch mounting bracket part no.	—	—	① BQ-2 ② BQ2-012 Two types of auto switch mounting brackets are used as a set.	—
Auto switch mounting bracket fitting parts lineup/Weight	—	—	① BQ-2 • Cross recessed round head screw (M3 x 10 L) • Square nut (M3 x 0.5) • Switch spacer Weight: 1.5 g ② BQ2-012 • Cross recessed round head screw (M2.5 x 6 L) • Auto switch mounting bracket Weight: 5 g	—
Auto switch mounting surface	Port/A/B/C side Port side 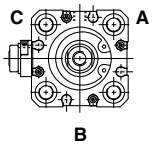	Port side Port side 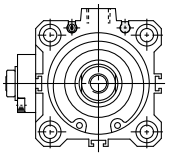	A/B/C side 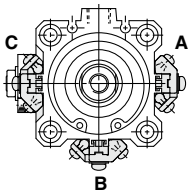	Port/A/B/C side Port side 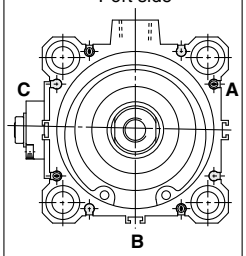
Mounting of auto switch	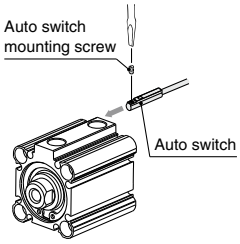 • When tightening an auto switch mounting screw, use a watchmaker's screwdriver with a handle diameter of 5 to 6 mm. **Tightening torque for auto switch mounting screw** [N·m] Auto switch model / Tightening torque D-M9□(V), D-M9□W(V), D-A9□(V): 0.05 to 0.15 D-M9□A(V): 0.05 to 0.10		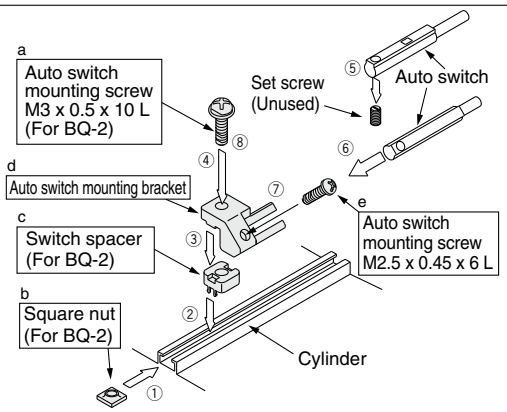 • BQ-2 is a set of a, b, and c shown above. • BQ2-012 is a set of d and e shown above. ① Insert the square nut for BQ-2 in the switch mounting rail and set it at the approximate auto switch mounting position. ② Fit the protruding part of the switch mounting spacer over the concave part of the rail, and slide the spacer to the nut position. ③ Fit the convex part of the auto switch mounting bracket arm over the concave part of the switch spacer. ④ Turn the auto switch mounting screw (M3 for BQ-2) lightly into the square nut through the mounting holes of the auto switch mounting arm and switch spacer. ⑤ Remove the set screw (M2.5) attached to the auto switch. ⑥ Insert the auto switch in the auto switch attachment part of the auto switch mounting bracket. ⑦ Secure the auto switch mounting screw (M2.5). (Tightening torque of M2.5 screw: 0.1 to 0.2 N·m) ⑧ Secure the auto switch mounting screw ④ after confirming the detecting position. (Tightening torque of M3 screw: 0.5 to 0.7 N·m) ⑨ Modify the detecting position while the auto switch is secured at the position of ④ in the figure.	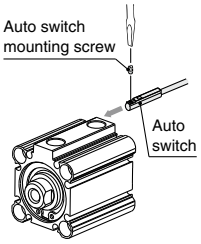 • When tightening an auto switch mounting screw, use a watchmaker's screwdriver with a handle diameter of 5 to 6 mm. **Tightening torque for auto switch mounting screw** [N·m] Auto switch model / Tightening torque D-M9□(V), D-M9□W(V), D-A9□(V): 0.05 to 0.15 D-M9□A(V): 0.05 to 0.10

[Stainless Steel Mounting Screw Kit]

The following stainless steel mounting screw kit (with nuts) is available. Use it in accordance with the operating environment. (Since auto switch spacer (for BQ-2) is not included, order BQ-2 separately.)

BBA2: For D-A7/A8/F7/J7 types

The above stainless steel mounting screws are used when a cylinder is shipped with the D-F7BA/F7BAV water-resistant auto switches.

When only one auto switch is shipped independently, the BBA2 is attached.

∗ Refer to the **Web Catalog** for details on the BBA2.

∗ When mounting D-M9□A(V) on a port other than the ports for ø32, ø40, and ø50, order auto switch mounting brackets BQ2-012S, BQ-2, and the stainless steel screw kit BBA2 separately.

Auto Switch Mounting Brackets/Part Nos.

Applicable Cylinder Series: CDBQ2 (With end lock)

Applicable auto switch	D-F7□/F7□V/J79/J79C/F7□W/J79W/F7□WV D-F7BA/F7BAV/F79F/F7NT D-A7□/A80/A7□H/A80H/A73C/A80C/A79W	D-P4DW
Bore size [mm]	ø32 to ø100	ø40 to ø100
Auto switch mounting bracket part no.	BQ-2	BQP1-050
Auto switch mounting bracket fitting parts lineup/Weight	• Cross recessed round head screw (M3 x 10 L) • Square nut (M3 x 0.5) • Switch spacer Weight: 1.5 g	• Cross recessed round head screw (M3 x 16 L) • Hexagon socket head cap screw (M3 x 14 L) • Auto switch mounting nut • Auto switch mounting bracket Weight: 16 g
Auto switch mounting surface	A/B/C side 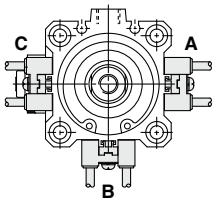	A/B/C side 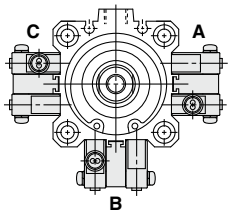
Mounting of auto switch	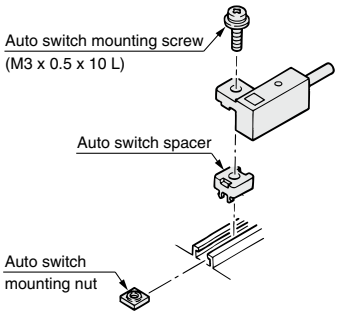 ① Slide the auto switch mounting nut inserted into the mounting rail and set it at the auto switch mounting position. ② Fit the convex part of auto switch mounting arm into the concave part of auto switch spacer. Then slide the switch over the nut. ③ Push the auto switch mounting screw lightly into the mounting nut through the holes of the auto switch mounting arm and auto switch spacer. ④ After reconfirming the detecting position, tighten the mounting screw to secure the auto switch. (Tightening torque of M3 screw should be 0.5 to 0.7 N·m.) ⑤ Modification of the detecting position should be made in the condition of ③.	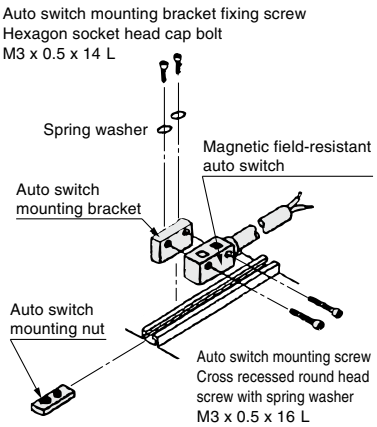 ① Mount the auto switch mounting bracket onto the auto switch mounting nut by tightening bracket fixing screw lightly through the mounting hole on the top of bracket. ② Insert the auto switch mounting bracket assembly (bracket + nut) into the mounting groove and set it at the auto switch mounting position. ③ Push the auto switch mounting screw lightly into the auto switch through the auto switch mounting hole to secure. ④ After reconfirming the detecting position, tighten the mounting screw to secure the auto switch mounting bracket and the auto switch. (Tightening torque should be 0.5 to 0.7 N·m.)

[Stainless Steel Mounting Screw Kit]

The following stainless steel mounting screw kit (with nuts) is available. Use it in accordance with the operating environment. (Since auto switch spacer (for BQ-2) is not included, order BQ-2 separately.)

BBA2: For D-A7/A8/F7/J7 types

The above stainless steel mounting screws are used when a cylinder is shipped with the D-F7BA/F7BAV water-resistant auto switches.

When only one auto switch is shipped independently, the BBA2 is attached.

∗ Refer to the **Web Catalog** for details on the BBA2.

∗ When mounting D-M9□A(V) on a port other than the ports for ø32, ø40, and ø50, order auto switch mounting brackets BQ2-012S, BQ-2, and the stainless steel screw kit BBA2 separately.

Other than the applicable auto switches listed in “How to Order,” the following auto switches are also mountable. Refer to the **Web Catalog** for detailed specifications.

Applicable Cylinder Series: CDQ2, CDQ2W, CDQ2-S/T (Single acting), CDQ2, CDQ2W (Large bore size), CDQ2□S (Anti-lateral load), CDQ2 (Long stroke), CDQ2K, CDQ2KW (Non-rotating rod), CDQ2□R/□V, CDQ2W□R/□V (Water resistant)

Auto switch type	Model	Electrical entry	Features	Applicable bore size
Reed	D-A72	Grommet (Perpendicular)	—	ø12 to ø160
	D-A73		—	
	D-A80		Without indicator light	
	D-A79W		Diagnostic indication (2-color indicator)	
	D-A73C	Connector (Perpendicular)	—	
	D-A80C		Without indicator light	
	D-A72H	Grommet (In-line)	—	
	D-A73H, A76H		—	
	D-A80H		Without indicator light	
Solid state	D-F7NV, F7PV, F7BV	Grommet (Perpendicular)	—	
	D-F7NWV, F7BWV		Diagnostic indication (2-color indicator)	
	D-F7BAV		Water resistant (2-color indicator)	
	D-J79C	Connector (Perpendicular)	—	
	D-F79, F7P, J79	Grommet (In-line)	—	
	D-F79W, F7PW, J79W		Diagnostic indication (2-color indicator)	
	D-F7BA		Water resistant (2-color indicator)	
	D-F79F		With diagnostic output (2-color indicator)	
	D-F7NT		With timer	

∗ With pre-wired connector is also available for solid state auto switches. For details, refer to the **Web Catalog**.
∗ Normally closed (NC = b contact) solid state auto switches (D-M9□E(V)) are also available. For details, refer to the **Web Catalog**.
∗ Trimmer auto switch (D-F7K) and heat-resistant solid state auto switch (D-F7NJ) are not available.

Applicable Cylinder Series: CDQP2, CDQP2-S/T (Axial piping), CDBQ2 (With end lock)

Auto switch type	Model	Electrical entry	Features	Applicable bore size
Reed	D-A73	Grommet (Perpendicular)	—	ø12 to ø100
	D-A80		Without indicator light	
	D-A73H, A76H	Grommet (In-line)	—	
	D-A80H		Without indicator light	
Solid state	D-F7NV, F7PV, F7BV	Grommet (Perpendicular)	—	ø12 to ø100
	D-F7NWV, F7BWV		Diagnostic indication (2-color indicator)	
	D-F7BAV		Water resistant (2-color indicator)	
	D-F79, F7P, J79	Grommet (In-line)	—	
	D-F79W, F7PW, J79W		Diagnostic indication (2-color indicator)	
	D-F7BA		Water resistant (2-color indicator)	
	D-F7NT		With timer	
	D-P5DW	Grommet (In-line)	Magnetic field resistant (2-color indicator)	ø40 to ø100

∗ With pre-wired connector is also available for solid state auto switches. For details, refer to the **Web Catalog**.
∗ Normally closed (NC = b contact) solid state auto switches (D-M9□E(V)) are also available. For details, refer to the **Web Catalog**.
∗ Excludes the D-P4DW for the CDQP2-S/T (Single acting)
∗ When using a magnetic field-resistant solid state auto switch D-P3DW type, please contact SMC separately. (Applicable bore size: ø32 to ø100)
∗ Heat-resistant solid state auto switch (D-F7NJ) is not applicable.
∗ Regarding the D-P5DW, please contact SMC separately.

	With End Lock	Axial Piping		Water Resistant		Non-rotating Rod		Long Stroke	Anti-lateral Load	Large Bore Size		Standard		
Made to Order	Double Acting, Single Rod **CBQ2**	Single Acting, Spring Return/Extend **CQP2**	Double Acting, Single Rod **CQP2**	Double Acting, Double Rod **CQ2W-R/V**	Double Acting, Single Rod **CQ2-R/V**	Double Acting, Double Rod **CQ2KW**	Double Acting, Single Rod **CQ2K**	Double Acting, Single Rod **CQ2**	Double Acting, Single Rod **CQ2□S**	Double Acting, Double Rod **CQ2W**	Double Acting, Single Rod **CQ2**	Single Acting, Spring Return/Extend **CQ2**	Double Acting, Double Rod **CQ2W**	Double Acting, Single Rod **CQ2**
Auto Switch														

Simple Specials/Made to Order Common Specifications

Made to Order

Please contact SMC for detailed specifications, delivery times, and prices.

■ Simple Specials

The following special specifications can be ordered as a simplified Made-to-Order.
Please contact your local sales representative for more details.

Symbol	Specifications	CQ2 (Standard) Double acting: Single rod	CQ2 (Standard) Double acting: Double rod	CQ2 (Standard) Single acting: Single rod/ Spring return	CQ2 (Standard) Single acting: Single rod/ Spring extend	CQ2 (Large bore size) Double acting: Single rod	CQ2 (Large bore size) Double acting: Double rod
-XA1 to 30	Change of rod end shape	●	●	●		●	●

■ Made to Order Common Specifications

Symbol	Specifications	CQ2 (Standard) Double acting: Single rod	CQ2 (Standard) Double acting: Double rod	CQ2 (Standard) Single acting: Single rod/ Spring return	CQ2 (Standard) Single acting: Single rod/ Spring extend	CQ2 (Large bore size) Double acting: Single rod	CQ2 (Large bore size) Double acting: Double rod
-XB6	Heat-resistant cylinder (–10 to 150°C)*4	●	●				
-XB7	Cold-resistant cylinder (–40 to 70°C)	●	●				
-XB9	Low-speed cylinder (10 to 50 mm/s)	●	●				
-XB10	Intermediate stroke (Exclusive body type)	●	●	●		●	●
-XB13	Low-speed cylinder (5 to 50 mm/s)	●	●				
-XB14	Cylinder with heat-resistant auto switch*2, 4	●					
-XC2(A)	Rod end length increased by 10 mm (For foot and flange bracket)	●	●	●	●		
-XC4	With heavy duty scraper	●	●				
-XC6(A)	Piston rod/Retaining ring/Rod end nut material: Stainless steel	●	●	●	●		
-XC8	Adjustable stroke cylinder/Adjustable extension type	●					
-XC9	Adjustable stroke cylinder/Adjustable retraction type	●					
-XC10	Dual stroke cylinder/Double rod type	●					
-XC11	Dual stroke cylinder/Single rod type	●					
-XC26	With split pins for double clevis pin/double knuckle joint pin and flat washers	●		●	●		
-XC26□	Double clevis width/Double knuckle width 12.5 mm, 16.5 mm, or 19.5 mm: With double clevis and double knuckle joint	●					
-XC27	Double clevis pin/Double knuckle joint pin material: Stainless steel 304	●		●	●		
-XC35	With coil scraper	●	●				
-XC36	With boss on rod end	●	●	●	●		
-XC85	Grease for food processing equipment	●	●	●	●	●	●
-XC88	Spatter-resistant coil scraper, Lube-retainer, Grease for welding (Piston rod: Stainless steel 304)	●					
-XC89	Spatter-resistant coil scraper, Lube-retainer, Grease for welding (Piston rod: S45C)	●					
-XC91	Spatter-resistant coil scraper, Grease for welding (Piston rod: S45C)	●					
-XC92	Dust-resistant actuator	●					
-X144	Special port location	●	●	●	●		
-X235	Special rod end for double rod cylinder		●				●
-X271	Fluororubber seals*4	●	●	●	●	●	●
-X525	Long stroke for adjustable extension stroke cylinder (-XC8)	●					
-X526	Long stroke for adjustable retraction stroke cylinder (-XC9)	●					
-X633	Intermediate stroke for double rod cylinder		●				●
-X636	Long stroke for dual stroke single rod cylinder	●					
-X1876	Cylinder tube: With concave boss on head end*3	●		●	●		

*1 ø12 to ø32: Special product, for ø40 to ø63 only *2 The body shape and model are the same as those of the existing CQ2 series product.

CQ2□S (Anti-lateral load)	CQ2 (Long stroke)	CQ2K (Non-rotating rod)		CQ2-R/V (Water resistant)		CQP2 (Axial piping)*2			CBQ2 (With end lock)*2	Page	Symbol
Double acting	Double acting	Double acting		Double acting		Double acting	Single acting		Double acting		
Single rod	Single rod	Single rod	Double rod	Single rod	Double rod	Single rod	Single rod/ Spring return	Single rod/ Spring extend	Single rod		
●	●	●	●			●	●			169	-XA1 to 30

CQ2□S (Anti-lateral load)	CQ2 (Long stroke)	CQ2K (Non-rotating rod)		CQ2-R/V (Water resistant)		CQP2 (Axial piping)			CBQ2 (With end lock)	Page	Symbol
Double acting	Double acting	Double acting		Double acting		Double acting	Single acting		Double acting		
Single rod	Single rod	Single rod	Double rod	Single rod	Double rod	Single rod	Single rod/ Spring return	Single rod/ Spring extend	Single rod		
		●	●			●				173	-XB6
						●				173	-XB7
						●				173	-XB9
●	●	●	●	●	●				●	174	-XB10
						●				176	-XB13
										177	-XB14
●		●	●							178	-XC2(A)
	●					●				179	-XC4
●	●			●	●	●	●	●		180	-XC6(A)
		●								181	-XC8
		●								182	-XC9
		●								183	-XC10
		●								184	-XC11
●	●	●*1		●					●	186	-XC26
●	●									187	-XC26□
●	●	●								188	-XC27
	●					●				188	-XC35
	●*5	●*5	●*5			●	●	●		189	-XC36
●	●	●	●	●	●	●	●	●	●	189	-XC85
●	●									190	-XC88
●	●									190	-XC89
										190	-XC91
										191	-XC92
										191	-X144
										192	-X235
●	●					●	●	●		192	-X271
										193	-X525
										194	-X526
			●							194	-X633
										195	-X636
●		●								196	-X1876

*3 For ø32 to ø100 only *4 Excludes the air-hydro type *5 The standard model can be used for the type with boss on the rod end (-XC36).

CQ2 Series
Simple Specials

The following changes are dealt with through the Simple Specials System.

Please contact your local sales representative for more details.

1 CQ2 (ø12 to ø25): Change of Rod End Shape

Applicable Series

Description		Model	Action	Symbol for change of rod end shape
CQ2 (ø12 to ø25)	Standard	**CQ2**	Double acting, Single rod	XA1, XA2, XA6 XA7, XA11 XA17, XA18
			Single acting (Spring return)*1	
		CQ2W	Double acting, Double rod	
	Axial piping	**CQP2**	Double acting, Single rod	
			Single acting (Spring return)*1	
	Non-rotating rod	**CQ2K**	Double acting, Single rod	XA1, XA2, XA6 XA11, XA17
		CQ2KW	Double acting, Double rod (Non-rotating side)	
			Double acting, Double rod (Round rod side)	XA1, XA2, XA6, XA7 XA11, XA17, XA18

*1 A single acting, spring extend type is available as a special order.

Precautions

- SMC will make appropriate arrangements if no dimension, tolerance, or finish instructions are given in the diagram.
- Standard dimensions marked with "*" will be as follows to the rod diameter (D).
  Enter any special dimension you require.
  ø12, ø16 → D-1 mm ø20, ø25 → D-2 mm
- In the case of a double rod, fill in the dimension when the rod is retracted.
- When changing the rod end shape on both sides, fill in the construction specification sheets for the left side (piston rod A) and for the right side (piston rod B) respectively.
  Selected model (Example) **CQ2WB32-10DZ-XA7A18**
  Use an XA7 specification sheet for the left side (piston rod A) and an XA18 specification sheet for the right side (piston rod B).
- For the XA17 and XA18, the male thread diameter cannot be the same as the piston rod external diameter.
- Please contact SMC separately for piston rod end pattern part numbers other than those in the table to the left or for other manufacturing requirements.
- The rod end nut is not included if the H1 dimension is changed from the standard product.

Symbol: **A1**

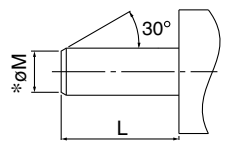

Symbol: **A2**

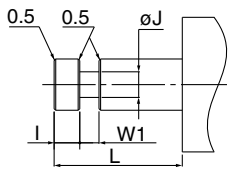

Symbol: **A6**

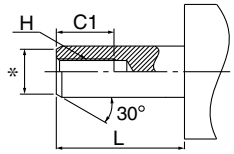

Symbol: **A7**

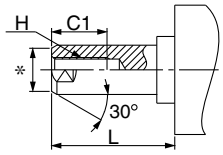

Symbol: **A11**

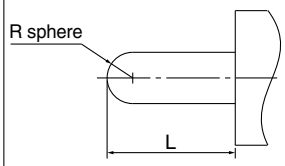

Symbol: **A17**

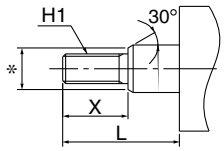

Symbol: **A18**

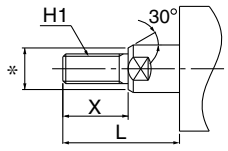

Symbol

-XA1/2/6/7/11/17/18

Conditions of Manufacture

Change of rod end shape/Symbol	Single rod type		Double rod type
XA1	For ø12	øM: 3 mm or more 5 mm or less	øM: ø5 mm or less
	ø16	øM: 3 mm or more 7 mm or less	øM: ø7 mm or less
	ø20	øM: 4 mm or more 8 mm or less	øM: ø8 mm or less
	ø25	øM: 4 mm or more 10 mm or less	øM: ø10 mm or less
XA2	For ø12	øJ: 4 mm or more, W_1: 6 mm or less	øJ: 3 mm or more, W_1: 6 mm or less
	ø16	øJ: 4 mm or more, W_1: 6 mm or less	øJ: 4 mm or more, W_1: 6 mm or less
	ø20	øJ: 5 mm or more, W_1: 11 mm or less	øJ: 5 mm or more, W_1: 11 mm or less
	ø25	øJ: 6 mm or more, W_1: 13 mm or less	øJ: 6 mm or more, W_1: 13 mm or less
XA6	For ø12	H: M4 or less	H: M4 or less
	ø16	H: M6 or less	H: M6 or less
	ø20	H: M6 or less	H: M6 or less
	ø25	H: M8 or less	H: M8 or less
XA7	For ø12	H: M4 or less	H: M4 or less
	ø16	H: M5 or less	H: M5 or less
	ø20	H: M6 or less	H: M6 or less
	ø25	H: M8 or less	H: M8 or less
XA11	For ø12	SR3 mm only	SR3 mm or more
	ø16	SR4 mm only	SR4 mm or more
	ø20	SR5 mm only	SR5 mm or more
	ø25	SR6 mm only	SR6 mm or more
XA17	For ø12	H: M5 or more, X: 20 mm or less	H: M5 or less
	ø16	H: M6 or more, X: 22.5 mm or less	H: M6 or less
	ø20	H: M8 or more, X: 26.5 mm or less	H: M8 or less
	ø25	H : M10 or more, X: 33 mm or less	H: M10 or less
XA18	For ø12	H: M5 or more, X: 20 mm or less	H: M5 or less
	ø16	H: M6 or more, X: 22.5 mm or less	H: M6 or less
	ø20	H: M8 or more, X: 26.5 mm or less	H: M8 or less
	ø25	H: M10 or more, X: 33 mm or less	H: M10 or less

CQ2 Series
Simple Specials

The following changes are dealt with through the Simple Specials System.

Please contact your local sales representative for more details.

1 CQ2 (ø32 to ø100)/CQ2 Large Bore Size (ø125 to ø200): Change of Rod End Shape

Description	Model	Action	Symbol for change of rod end shape
Standard	**CQ2**	Double acting, Single rod	XA1 to 23 XA26 to 30
		Single acting (Spring return)*1	
	CQ2W	Double acting, Double rod	
Axial piping	**CQP2**	Double acting, Single rod	
		Single acting (Spring return)	
Anti-lateral load	**CQ2□S**	Double acting, Single rod	
Long stroke	**CQ2**	Double acting, Single rod	
Non-rotating rod	**CQ2K**	Double acting, Single rod	XA1, XA2, XA6 XA10 to XA14 XA17, XA19, XA21
	CQ2KW	Double acting, Double rod (Non-rotating side)	
		Double acting, Double rod (Round rod side)	XA1 to 23 XA26 to 30
Large bore size	**CQ2**	Double acting, Single rod	
	CQ2W	Double acting, Double rod	

*1 A single acting, spring extend type is available as a special order.

Precautions

- SMC will make appropriate arrangements if no dimension, tolerance, or finish instructions are given in the diagram.
- Standard dimensions marked with "*" will be the rod diameter (D) – 2 mm. Enter any special dimension you require.
- In the case of a double rod, fill in the dimension when the rod is retracted.
- When changing the rod end shape on both sides, fill in the construction specification sheets for the left side (piston rod A) and for the right side (piston rod B) respectively.
  Selected model (Example) **CQ2WB32-10DZ-XA7A18**
  Use an XA7 specification sheet for the left side (piston rod A) and an XA18 specification sheet for the right side (piston rod B).
- The rod end nut is not included if the H1 dimension is changed from the standard product.

Symbol: **A1**

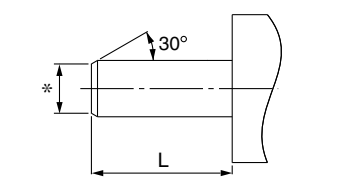

Symbol: **A2**

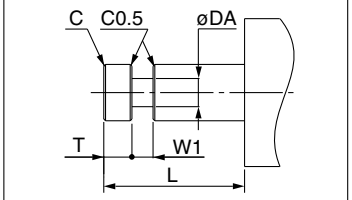

Symbol: **A3**

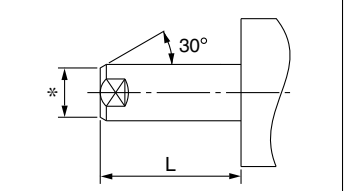

Symbol: **A4**

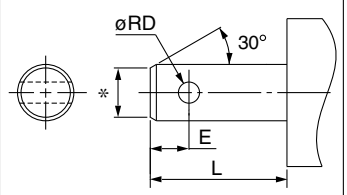

Symbol: **A5**

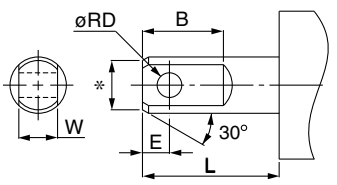

Symbol: **A6**

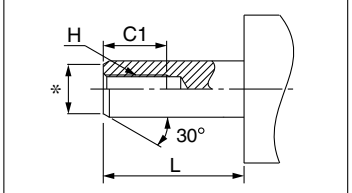

Symbol: **A7**

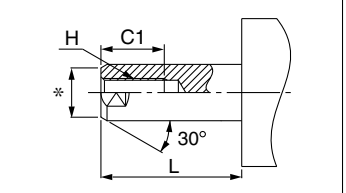

Symbol: **A8**

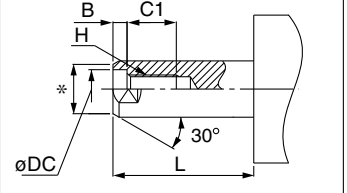

Symbol: **A9**

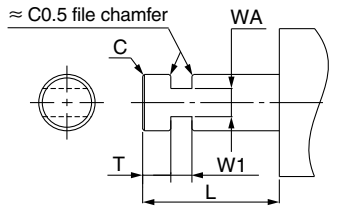

Symbol: **A10**

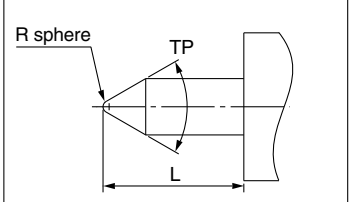

Symbol: **A11**

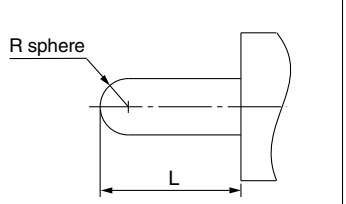

Symbol: **A12**

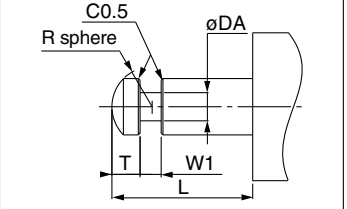

Symbol

-XA1 to XA23/-XA26 to XA30

Symbol: **A13**

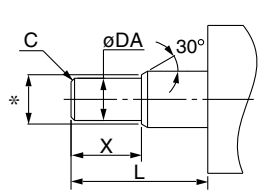

Symbol: **A14**

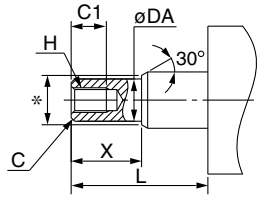

Symbol: **A15**

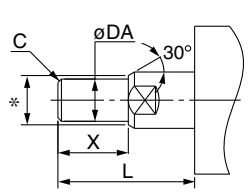

Symbol: **A16**

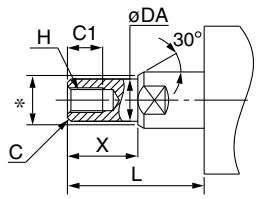

Symbol: **A17**

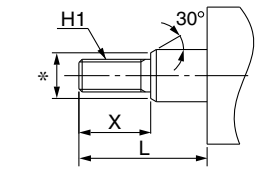

Symbol: **A18**

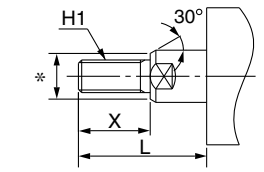

Symbol: **A19**

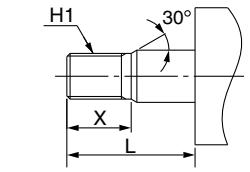

Symbol: **A20**

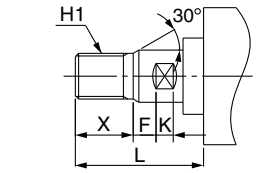

Symbol: **A21**

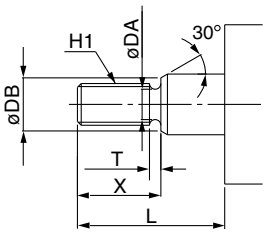

Symbol: **A22**

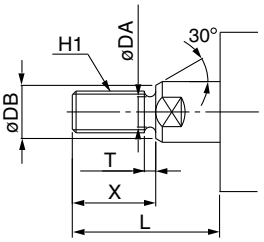

Symbol: **A23**

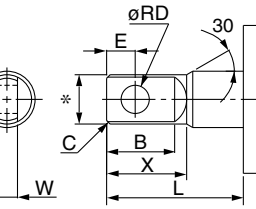

Symbol: **A26**

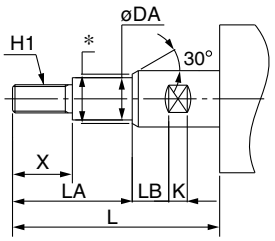

Symbol: **A27**

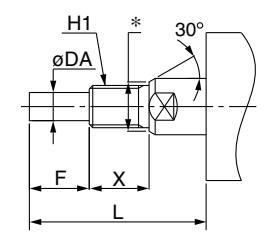

Symbol: **A28**

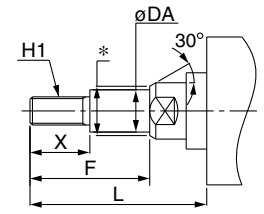

Symbol: **A29**

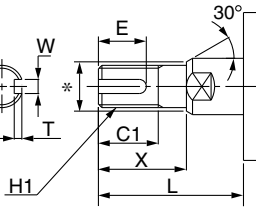

Symbol: **A30**

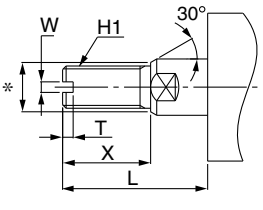

Made to Order Common Specifications

Please contact SMC for detailed dimensions, specifications, and delivery times.

Made to Order

1 Heat-resistant Cylinder (–10 to 150°C)

Symbol **-XB6**

The seal material and grease used in this air cylinder have been changed so that it can be used at temperatures between –10 up to 150°C.

Description	Model	Action	Note
Compact cylinder	**CQ2**	Double acting, Single rod	Excludes models with a rubber bumper or auto switch magnet Excludes the air-hydro type
	CQ2W	Double acting, Double rod	
Axial piping	**CQP2**	Double acting, Single rod	
Non-rotating rod	**CQ2K**	Double acting, Single rod	Excludes models with a rubber bumper or auto switch magnet
	CQ2KW	Double acting, Double rod	

∗ Operate without lubrication from a pneumatic system lubricator.
∗ Please contact SMC for details on the maintenance intervals for this cylinder as they differ from those of the standard cylinder.
∗ In principle, it is impossible to make a heat-resistant cylinder with a built-in magnet or with an auto switch. But, as for the one with an auto switch, and the heat-resistant cylinder with a heat-resistant auto switch, since it will be differed depending on the series, please contact SMC.
∗ Piston speed ranges from 50 to 500 mm/s
∗ Please contact SMC for models with a rubber bumper.

Specifications

Ambient temperature range	–10°C to 150°C
Seal material	Fluororubber
Grease	Heat-resistant grease
Specifications other than the above and dimensions	Same as the standard type

⚠ Warning

Precautions

Be aware that smoking cigarettes, etc., after your hands have come into contact with the grease used in this cylinder can create a gas that is hazardous to humans.

How to Order

Standard model no. – **XB6**

Heat-resistant cylinder

2 Cold-resistant Cylinder (–40 to 70°C)

Symbol **-XB7**

The seal material and grease used in this air cylinder have been changed so that it can be used even at lower temperature down to –40°C.

Description	Model	Action	Note
Compact cylinder	**CQ2**	Double acting, Single rod	Applicable to ø12 to ø40 Excludes models with a rubber bumper, auto switch magnet, or mounting bracket
	CQ2W	Double acting, Double rod	
Axial piping	**CQP2**	Double acting, Single rod	

∗ Operate without lubrication from a pneumatic system lubricator.
∗ Use dry air which is suitable for heatless air dryer, etc., not to cause the moisture to be frozen.
∗ Please contact SMC for details on the maintenance intervals for this cylinder as they differ from those of the standard cylinder.
∗ Mounting auto switch is impossible.
∗ Please contact SMC for models with a rubber bumper.

Specifications

Ambient temperature range	–40°C to 70°C
Seal material	Low nitrile rubber
Grease	Cold-resistant grease
Auto switch	Not mountable
Dimensions	Same as the standard type
Specifications other than the above	Same as the standard type

⚠ Warning

Precautions

Be aware that smoking cigarettes, etc., after your hands have come into contact with the grease used in this cylinder can create a gas that is hazardous to humans.

How to Order

Standard model no. – **XB7**

Cold-resistant cylinder

3 Low-speed Cylinder (10 to 50 mm/s)

Symbol **-XB9**

Stick-slip phenomenon can be prevented, and smooth operation can be achieved even at lower driving speeds between 10 to 50 mm/s.

Description	Model	Action	Note
Compact cylinder	**CQ2**	Double acting, Single rod	
	CQ2W	Double acting, Double rod	
Axial piping	**CQP2**	Double acting, Single rod	

∗ Operate without lubrication from a pneumatic system lubricator.

Specifications

Piston speed	10 to 50 mm/s
Dimensions	Same as the standard type
Specifications other than the above	Same as the standard type

⚠ Warning

Precautions

Be aware that smoking cigarettes, etc., after your hands have come into contact with the grease used in this cylinder can create a gas that is hazardous to humans.

How to Order

Standard model no. – **XB9**

Low-speed cylinder

4 Intermediate Stroke (Exclusive Body Type)

Symbol **-XB10**

A made-to-order exclusive body for specified strokes is also available. The overall length can be made shorter than that of spacer-installed types 1 and 2.

Description	Model	Action	Note
Compact cylinder	CQ2	Double acting, Single rod	
		Single acting (Spring return)	
	CQ2W	Double acting, Double rod	
Non-rotating rod	CQ2K	Double acting, Single rod	Applicable to ø40 to ø63
	CQ2KW	Double acting, Double rod	
Large bore size	CQ2	Double acting, Single rod	
	CQ2W	Double acting, Double rod	
Long stroke	CQ2	Double acting, Single rod	
Anti-lateral load	CQ2□S	Double acting, Single rod	
Water resistant	CQ2-R/V	Double acting, Single rod	Applicable to ø40 to ø100
	CQ2W-R/V	Double acting, Double rod	
With end lock	CBQ2	Double acting, Single rod	

How to Order

Standard model no. −XB10

Intermediate stroke

Bore size [mm]	Stroke range
12, 16	6 to 29
20, 25	6 to 49
32, 40	6 to 99
50 to 100	11 to 99

∗ In the case of exclusive body type with ø32 to ø100 (-XB10) with the stroke length exceeding 50 mm, reference values of the longitudinal dimension (A/B dimension) will be the same as those with auto switch magnet.
Refer to the following for details.

Ordering example

Part no.	CQ2B50-57DZ-XB10
Description	● Makes 57 mm stroke tube. ● The B dimension is 97.5 mm. B = 40.5 + 57

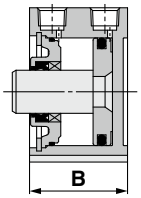

Specifications: Same as those of the standard type

Dimensions The A and B dimensions shown below are the same as those of the standard type. (Shown for reference purposes)

Double acting, Single rod/Standard

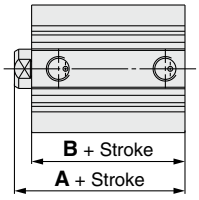

[mm]

Bore size [mm]	Single rod type A: 49 mm stroke or less	A: 51 to 99 mm stroke	B: 49 mm stroke or less	B: 51 to 99 mm stroke	Applicable stroke range [mm]
12	20.5 (31.5)	—	17 (28)	—	6 to 29
16	22 (34)	—	18.5 (30.5)	—	
20	24 (36)	—	19.5 (31.5)	—	6 to 49
25	27.5 (37.5)	—	22.5 (32.5)	—	
32	30 (40)	40 (40)	23 (33)	33 (33)	6 to 99
40	36.5 (46.5)	46.5 (46.5)	29.5 (39.5)	39.5 (39.5)	
50	38.5 (48.5)	48.5 (48.5)	30.5 (40.5)	40.5 (40.5)	11 to 99
63	44 (54)	54 (54)	36 (46)	46 (46)	
80	53.5 (63.5)	63.5 (63.5)	43.5 (53.5)	53.5 (53.5)	
100	65 (75)	75 (75)	53 (63)	63 (63)	

Double acting, Double rod/Standard

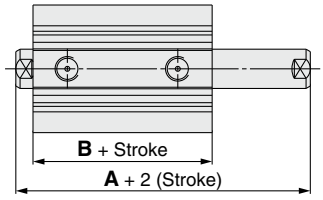

[mm]

Bore size [mm]	Double rod type A: 49 mm stroke or less	A: 51 to 99 mm stroke	B: 49 mm stroke or less	B: 51 to 99 mm stroke	Applicable stroke range [mm]
12	32.2 (39.4)	—	25.2 (32.4)	—	6 to 29
16	33 (43)	—	26 (36)	—	
20	35 (47)	—	26 (38)	—	6 to 49
25	39 (49)	—	29 (39)	—	
32	44.5 (54.5)	54.5 (54.5)	30.5 (40.5)	40.5 (40.5)	6 to 99
40	54 (64)	64 (64)	40 (50)	50 (50)	
50	56.5 (66.5)	66.5 (66.5)	40.5 (50.5)	50.5 (50.5)	11 to 99
63	58 (68)	68 (68)	42 (52)	52 (52)	
80	71 (81)	81 (81)	51 (61)	61 (61)	
100	84.5 (94.5)	94.5 (94.5)	60.5 (70.5)	70.5 (70.5)	

∗ ( ): Dimensions with auto switch magnet
∗ Other dimensions are the same as those of the standard type.
∗ Applicable stroke available in 1 mm increments

Single acting, Spring return

[mm]

Bore size [mm]	Single rod type (Single acting/Spring return) A	B	Applicable stroke range [mm]
12	20.5 (31.5)	17 (28)	6 to 9
16	22 (34)	18.5 (30.5)	
20	24 (36)	19.5 (31.5)	6 to 9
25	27.5 (37.5)	22.5 (32.5)	
32	30 (40)	23 (33)	6 to 9
40	36.5 (46.5)	29.5 (39.5)	
50	38.5 (48.5)	30.5 (40.5)	11 to 19

4 Intermediate Stroke (Exclusive Body Type)

Symbol
-XB10

Dimensions (Dimensions other than those below are the same as those of the standard type.)

Double acting, Single rod/ Long stroke

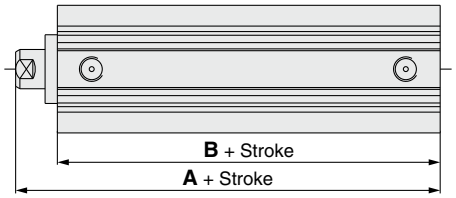

[mm]

Bore size [mm]	Single rod type (Long stroke)		Applicable stroke range [mm]
	A	B	
32	62.5	45.5	101 to 299
40	72	55	
50	73.5	55.5	
63	75	57	
80	86	66	
100	97.5	75.5	

∗ Dimensions other than those above are the same as those of the standard type.
∗ Applicable stroke available in 1 mm increments

Double acting, Single rod/ Large bore

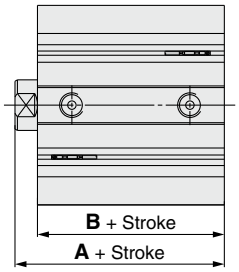

[mm]

Bore size [mm]	Single rod type		Applicable stroke range [mm]
	A	B	
125	99	83	11 to 299
140	99	83	
160	108	91	
180	119	102	
200	126	109	

∗ Dimensions other than those above are the same as those of the standard type.
∗ Applicable stroke available in 1 mm increments

Double acting, Double rod/ Large bore

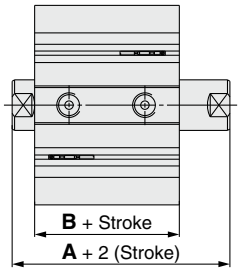

[mm]

Bore size [mm]	Double rod type		Applicable stroke range [mm]
	A	B	
125	115	83	11 to 299
140	115	83	
160	125	91	
180	136	102	
200	143	109	

∗ Dimensions other than those above are the same as those of the standard type.
∗ Applicable stroke available in 1 mm increments

Double acting, Single rod/End lock With head side locking

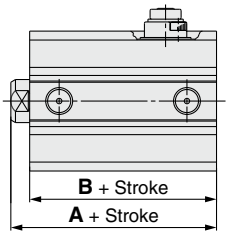

[mm]

Bore size [mm]	A		B		Applicable stroke range [mm]
	24 mm stroke or less	26 to 99 mm stroke	24 mm stroke or less	26 to 99 mm stroke	
20	65.5	80.5	61	66	6 to 99
25	69	84	64	69	
32	72.5		65.5		
40	82		75		
50	83.5		75.5		
63	85		77		

Bore size [mm]	A		B		Applicable stroke range [mm]
	49 mm stroke or less	51 to 99 mm stroke	49 mm stroke or less	51 to 99 mm stroke	
80	121	136	111	116	6 to 99
100	132.5	147.5	120.5	125.5	

Double acting, Single rod/End lock With rod side locking

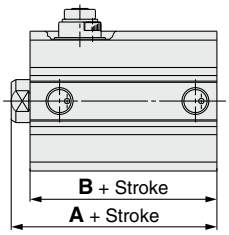

[mm]

Bore size [mm]	A		B		Applicable stroke range [mm]
	24 mm stroke or less	26 to 99 mm stroke	24 mm stroke or less	26 to 99 mm stroke	
20	59	80.5	54.5	66	6 to 99
25	62.5	84	57.5	69	
32	65		58		
40	71.5		64.5		
50	73.5		65.5		
63	79		71		

Bore size [mm]	A		B		Applicable stroke range [mm]
	49 mm stroke or less	51 to 99 mm stroke	49 mm stroke or less	51 to 99 mm stroke	
80	113.5	136	103.5	116	6 to 99
100	125	147.5	113	125.5	

5 Low-speed Cylinder (5 to 50 mm/s)

Symbol
-XB13

Stick-slip phenomenon can be prevented, and smooth operation can be achieved even at lower driving speeds between 5 to 50 mm/s.

Description	Model	Action	Note
Compact cylinder	**CQ2**	Double acting, Single rod	
	CQ2W	Double acting, Double rod	
Axial piping	**CQP2**	Double acting, Single rod	

* Operate without lubrication from a pneumatic system lubricator.
* For the speed adjustment, use speed controllers for controlling at lower speeds. (AS-FM/AS-M series)

How to Order

Standard model no. **−XB13**

Low-speed cylinder

Specifications

Piston speed	5 to 50 mm/s
Dimensions	Same as the standard type
Specifications other than the above	Same as the standard type

⚠ Warning

Precautions

Be aware that smoking cigarettes, etc., after your hands have come into contact with the grease used in this cylinder can create a gas that is hazardous to humans.

6 Cylinder with Heat-resistant Auto Switch

Symbol **-XB14**

A heat-resistant, compact cylinder which can mount a heat-resistant auto switch (Max. 150°C)

Applicable Series

Description	Model	Action	Note
Compact cylinder	CQ2	Double acting, Single rod	Applicable to ø16 to ø63 Excludes models with a rubber bumper Excludes the air-hydro type

Specifications

Ambient and fluid temperature range	0 to 150°C
Seal material	Fluororubber
Grease	Heat-resistant grease
Min. stroke for auto switch mounting	15 (Same for both 1 pc. and 2 pcs.)
Specifications other than the above	Same as the standard type

For the detailed specifications of auto switches, refer to the **Web Catalog**.

How to Order

Standard model no. – **M9NJL** [ ] – **XB14**

Auto switch

Symbol	Output
M9NJ	NPN
M9PJ	PNP
F7NJ	NPN

Number of auto switches

Cylinder with heat-resistant auto switch

∗ Lead wire length symbols
3 m ····· L (Example) M9NJL
5 m ····· Z (Example) M9NJZ

Auto Switch Proper Mounting Position (Detection at stroke end) and Mounting Height

D-M9□J

ø16 to ø25

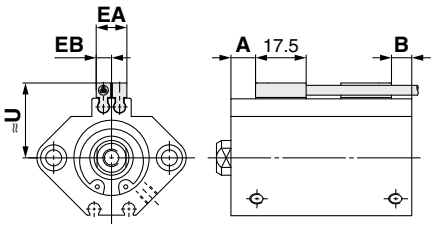

ø32 to ø63

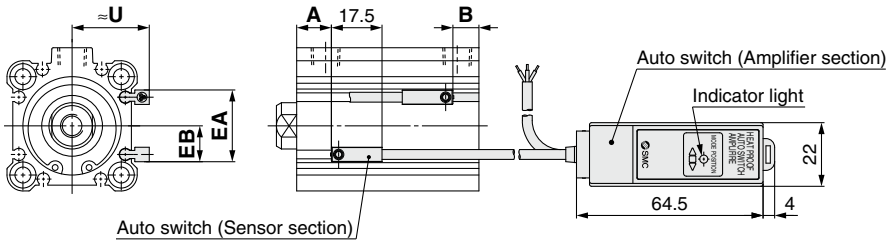

D-F7NJ

ø16 to ø25

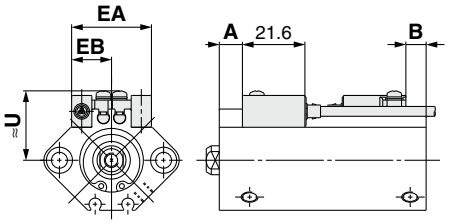

ø32 to ø63

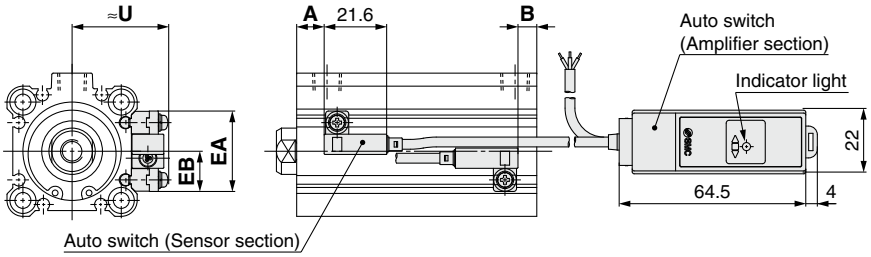

[mm]

Bore size \ Auto switch model	D-M9□J					D-F7NJ				
	A	B	U	EA	EB	A	B	U	EA	EB
16	9.5	7	21	11	5.5	8	5.5	22.5	28	14
20	9.5	8.5	23.5	11	5.5	8	7	25.5	28	14
25	9.5	9	27	11	5.5	8	7.5	28	28	14
32	11	8	29	25	12.5	9.5	6.5	36	28	14
40	15	10.5	31	30	15	13.5	9	38	33	16.5
50	13	13.5	36	34	17	11.5	12	43.5	37	18.5
63	15.5	16.5	41.5	43	21.5	14	15	48.5	46	23

∗ Adjust the auto switch after confirming the operating conditions in the actual setting.

Operating Range

[mm]

Auto switch model	Bore size						
	16	**20**	**25**	**32**	**40**	**50**	**63**
D-M9□J	4.5	4.5	4.5	5	4.5	5	5
D-F7NJ	4.5	4.5	4.5	5	4.5	5	5

∗ Since the operating range is provided as a guideline at room temperature, it cannot be guaranteed. It may change substantially depending on the ambient environment.

Auto Switch Mounting Bracket Part Nos.

Auto switch model	Bore size [mm]						
	16	**20**	**25**	**32**	**40**	**50**	**63**
D-F7NJL(Z)	BQ4-012			BQJ2-032			

Auto Switch Mounting Bracket Weight

Mounting bracket part no.	Weight [g]
BQ4-012	1.5
BQJ2-032	3.6

∗ The dimensions of the cylinder body are equivalent to those of the standard type, double acting, single rod of the CDQ2 series.

∗ Auto switches are shipped in the same package as the product but do not come assembled for protection purposes. Assemble them by referring to the A and B dimensions for mounting position shown above.

∗ The tightening torque for the auto switch mounting M2.5 screw is 0.25 to 0.35 N·m.

7 Rod End Length Increased by 10 mm (For foot and flange bracket)

Symbol **-XC2(A)**

XC2: The rod end length (L dimension) of the cylinder for mounting a foot, compact foot, or rod flange is 10 mm longer than that of the standard product.

Description	Model	Action	Note
Compact cylinder	**CQ2**	Double acting, Single rod	Foot, Rod flange
	CQ2	Single acting (Spring return/extend)	Foot, Rod flange
	CQ2W	Double acting, Double rod	Foot
Non-rotating rod	**CQ2K**	Double acting, Single rod	Foot, Rod flange
	CQ2KW	Double acting, Double rod	Foot
Anti-lateral load	**CQ2□S**	Double acting, Single rod	Foot, Rod flange

XC2A: The rod end length (L dimension) of the cylinder for mounting a double rod type flange is 10 mm longer than that of the standard product. (On one side only)

Description	Model	Action	Note
Compact cylinder	**CQ2W**	Double acting, Double rod	Flange
Non-rotating rod	**CQ2KW**	Double acting, Double rod	Flange

How to Order

C(D)Q2A | **Standard model no.** | **– XC2(A)**

● **Rod end length increased by 10 mm (For foot and flange bracket)**

-XC2	For foot and single rod type rod flange
-XC2A	For double rod type flange

Specifications: Same as those of the standard type

Dimensions (Dimensions other than those below are the same as those of the standard type.)

Double acting, Single rod (-XC2)

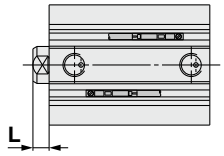

Rod end female thread

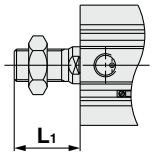

Rod end male thread

Double acting, Double rod (-XC2)

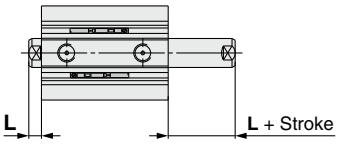

Rod end female thread

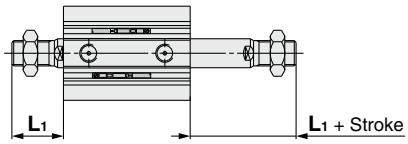

Rod end male thread

Double acting, Double rod (-XC2A)

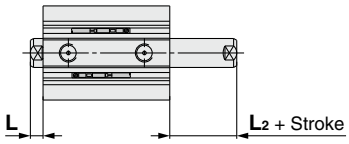

Rod end female thread

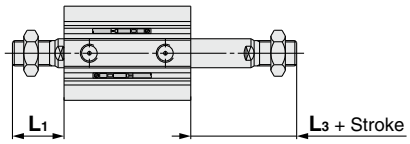

Rod end male thread

XC2: Standard, Anti-lateral load, Non-rotating rod [mm]

Bore size [mm]	Applicable series		Female thread	Male thread
	Standard Anti-lateral load	Non-rotating rod	**L**	**L_1**
12	○	—	13.5	24
16	○	—	13.5	25.5
20	○	—	14.5	28.5
25	○	—	15	32.5
32	○	—	17	38.5
40	○	○	17	38.5
50	○	○	18	43.5
63	○	○	18	43.5
80	○	—	20	53.5
100	○	—	22	53.5

XC2A: Standard, Non-rotating rod [mm]

Bore size [mm]	Applicable series		Female thread		Male thread	
	Standard	Non-rotating rod	**L**	**L_2**	**L_1**	**L_3**
12	○	—	13.5	3.5	24	14
16	○	—	13.5	3.5	25.5	15.5
20	○	—	14.5	4.5	28.5	18.5
25	○	—	15	5	32.5	22.5
32	○	—	17	7	38.5	28.5
40	○	○	17	7	38.5	28.5
50	○	○	18	8	43.5	33.5
63	○	○	18	8	43.5	33.5
80	○	—	20	10	53.5	43.5
100	○	—	22	12	53.5	43.5

XC2: CQ2 Single acting [mm]

End shape / Action / Stroke / Bore size	Female thread				Male thread			
	L				**L_1**			
	Spring return	Spring extend			Spring return	Spring extend		
	All strokes	5	10	20	All strokes	5	10	20
12	13.5	18.5	23.5	—	24	29	34	—
16	13.5	18.5	23.5	—	25.5	30.5	35.5	—
20	14.5	19.5	24.5	—	28.5	33.5	38.5	—
25	15	20	25	—	32.5	37.5	42.5	—
32	17	22	27	—	38.5	43.5	48.5	—
40	17	22	27	—	38.5	43.5	48.5	—
50	18	—	28	38	43.5	—	53.5	63.5

8 With Heavy Duty Scraper

Symbol
-XC4

With the heavy duty scraper on the wiper ring, this cylinder is suitable for use in environments where die-cast equipment, construction machinery or industrial vehicles are exposed to dirt or sand, or in environments with significant amounts of dust.

Description	Model	Action	Note
Compact cylinder	**CQ2**	Double acting, Single rod	Applicable to ø20 to ø100 The only mounting option selectable for sizes ø20 to ø32 is the (B) through-hole.
	CQ2W	Double acting, Double rod	Applicable to ø40 to ø100
Axial piping	**CQP2**	Double acting, Single rod	Applicable to ø32 to ø100
Long stroke	**CQ2**	Double acting, Single rod	

Specifications

Minimum operating pressure	0.08 MPa
Specifications other than the above	Same as the standard type

⚠Caution

Do not replace heavy duty scrapers.

- Since heavy duty scrapers are press-fit, do not replace the cover only, but rather the entire rod cover assembly.

How to Order

Standard model no. – XC4

With heavy duty scraper

Dimensions (Dimensions other than those below are the same as those of the standard type.)

Double acting, Single rod

ø20, ø25 (Without auto switch magnet), ø32

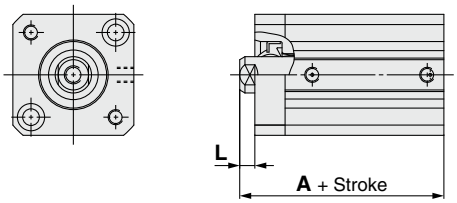

ø20, ø25 (With auto switch magnet)

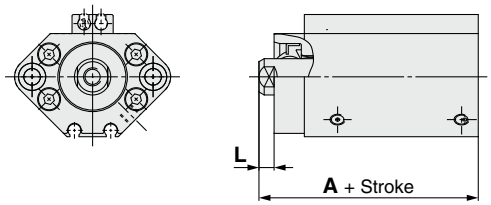

ø40 to ø100

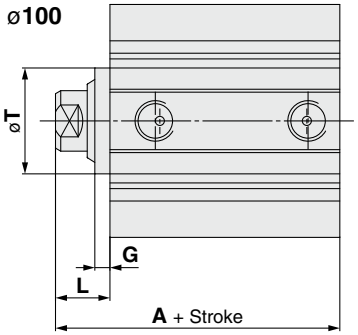

Rod end male thread

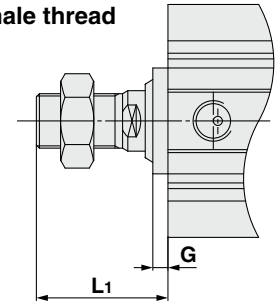

[mm]

Bore size [mm]	A			G		L		L1		T
	50 mm stroke or less	75, 100 mm stroke	125 to 300 mm stroke	100 mm stroke or less	125 mm stroke or more	100 mm stroke or less	125 to 300 mm stroke	100 mm stroke or less	125 to 300 mm stroke	
20	34 (46)	—	—	—	—	4.5	—	18.5	—	—
25	37.5 (47.5)	—	—	—	—	5	—	22.5	—	—
32	40 (50)	50	67.5	—	—	7	12	28.5	33.5	—
40	46.5 (56.5)	56.5	77	5	10	17	22	38.5	43.5	28
50	48.5 (58.5)	58.5	78.5	5	10	18	23	43.5	48.5	35
63	54 (64)	64	80	5	10	18	23	43.5	48.5	35
80	63.5 (73.5)	73.5	91	5	10	20	25	53.5	58.5	43
100	75 (85)	85	102.5	5	10	22	27	53.5	58.5	59

( ): Dimensions with auto switch magnet

Double acting, Double rod

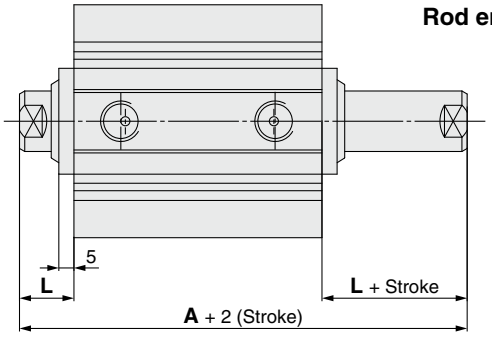

Rod end male thread

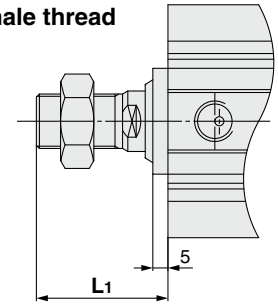

[mm]

Bore size [mm]	A		L	L1
	Up to 50 mm stroke	75, 100 mm stroke		
40	46.5 (56.5)	56.5	17	38.5
50	48.5 (58.5)	58.5	18	43.5
63	54 (64)	64	18	43.5
80	63.5 (73.5)	73.5	20	53.5
100	75 (85)	85	22	53.5

( ): Dimensions with auto switch magnet

9 Piston Rod/Retaining Ring/Rod End Nut Material: Stainless Steel

Symbol **-XC6(A)**

Suitable for cases in which rust is likely to be generated due to immersion in water or in which corrosion is likely to occur.

Description	Model	Action
Compact cylinder	CQ2	Double acting, Single rod
		Single acting (Spring return/extend)
	CQ2W	Double acting, Double rod
Axial piping (Centralized piping)	CQP2	Double acting, Single rod
		Single acting (Spring return/extend)
Long stroke	CQ2	Double acting, Single rod
Anti-lateral load	CQ2□S	Double acting, Single rod
Water resistant	CQ2-R/V	Double acting, Single rod
	CQ2W-R/V	Double acting, Double rod

Specifications

Parts changed to stainless steel	Retaining ring, Piston rod, Rod end nut
Specifications other than the above and dimensions	Same as the standard type

∗ The rod end nut is also made of stainless steel for the rod end male thread type.

Stainless steel rod end brackets (single knuckle joint, double knuckle joint) are also available.
For details ⇨ p. 34

How to Order

Standard model no. – **XC6**

Made of stainless steel

Description	Model	Action
Water resistant	CQ2□$^{R}_{V}$	Double acting, Single rod
	CQ2W□$^{R}_{V}$	Double acting, Double rod

Specifications

Parts changed to stainless steel	**XC6**	Retaining ring, Piston rod, Rod end nut
	XC6A ∗1	Piston rod, Rod end nut, Cover holding bolt
Specifications other than the above and dimensions		Same as the standard type

∗ -XC6A is only applicable to ø20, ø25, and ø32 of the double acting, single rod type.

How to Order

C□Q2□$^{R}_{V}$
C□Q2W□$^{R}_{V}$

Standard model no. – **XC6** **A**

Made of stainless steel

Suffix

Nil	Piston rod/Retaining ring/Rod end nut material: Stainless steel
A	Piston rod/Rod end nut/Cover holding bolt material: Stainless steel

ø20 to ø32

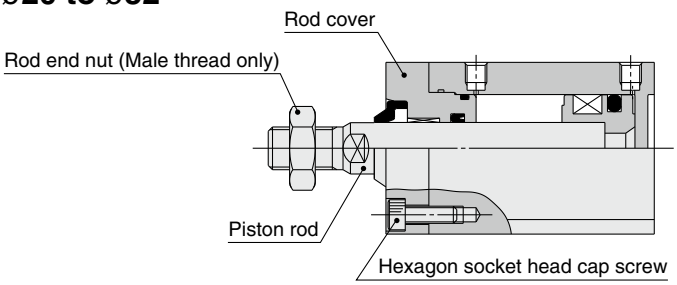

10 Adjustable Stroke Cylinder/Adjustable Extension Type

Symbol **-XC8**

Adjusts the extending stroke with the stroke-adjusting mechanism equipped in the head side

Description	Model	Action	Note
Compact cylinder	**CQ2**	Double acting, Single rod	Excludes models with a rubber bumper or mounting bracket
Non-rotating rod	**CQ2K**	Double acting, Single rod	Excludes models with a rubber bumper or mounting bracket
Air-hydro type	**CQ2H**	Double acting, Single rod	Excludes models with a mounting bracket

How to Order

Standard model no. – XC8

Adjustable stroke cylinder/Adjustable extension type

Specifications

Stroke adjustment range [mm]	0 to 10
Specifications other than the above	Same as the standard type

Precautions

⚠ Warning

1. **When the cylinder is operating, if something gets caught between the stopper bracket for adjusting the stroke and the cylinder body, it could cause bodily injury or damage the peripheral equipment. Therefore, take preventive measures as necessary, such as installing a protective cover.**
2. **To adjust the stroke, make sure to secure the wrench flats of the stopper bracket with a wrench, etc., before loosening the lock nut. If the lock nut is loosened without securing the stopper bracket first, be aware that the area that joins the load to the piston rod or the area in which the piston rod is joined with the load side and the stopper bracket side could loosen first. This may cause an accident or malfunction.**

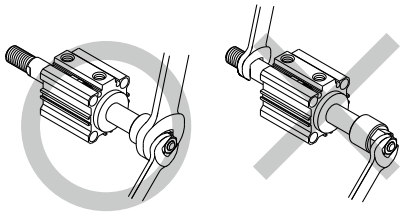

Symbol

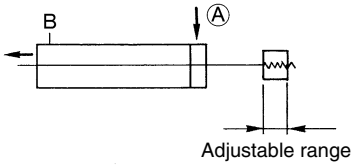

Dimensions (Dimensions other than those below are the same as those of the standard type.)

ø12 to ø25

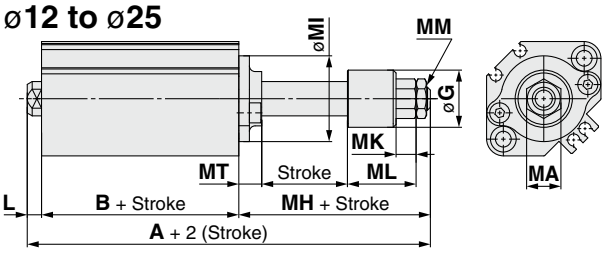

ø32 to ø100

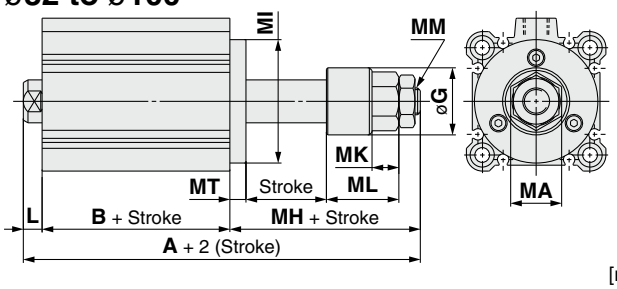

[mm]

Bore size [mm]	A		B		L	MH	MT	MA	MI	MM	MK	ML	øG	Manufacturable stroke
	50 mm stroke or less	75, 100 mm stroke	50 mm stroke or less	75, 100 mm stroke										
12	57.7 (64.9)	—	25.2 (32.4)	—	3.5	29	5	8	□25 (ø15)	M4 x 0.7	5.5	20	14	5 to 30
16	58.5 (68.5)	—	26 (36)	—	3.5	29	5	10	□28 (ø20)	M5 x 0.8	5.5	20	14	
20	67.5 (79.5)	—	26 (38)	—	4.5	37	8	12	□36 (ø25)	M6 x 1	7	24	20	5 to 50
25	71 (81)	—	29 (39)	—	5	37	8	12	□40 (ø30)	M6 x 1	7	24	20	
32	78.5 (88.5)	88.5	30.5 (40.5)	40.5	7	41	6	17	ø38	M8 x 1.25	9	28.5	25	5 to 50
40	88 (98)	98	40 (50)	50	7	41	6	19	ø46	M10 x 1.25	10	27	25	75, 100
50	100.5 (110.5)	110.5	40.5 (50.5)	50.5	8	52	8	24	ø57	M14 x 1.5	13	31	35	10 to 50 75, 100
63	102 (112)	112	42 (52)	52	8	52	10	24	ø68	M14 x 1.5	13	31	35	
80	125 (135)	135	51 (61)	61	10	64	12	32	ø90	M20 x 1.5	16	40	45	
100	138.5 (148.5)	148.5	60.5 (70.5)	70.5	12	66	14	32	ø110	M20 x 1.5	16	40	45	

∗ ( ): Dimensions with auto switch magnet
∗ The symbol is X525 for the long stroke type. ⇨ p. 193

11 Adjustable Stroke Cylinder/Adjustable Retraction Type

Symbol **-XC9**

The retract stroke of the cylinder can be adjusted by the adjustment bolt.

Description	Model	Action	Note
Compact cylinder	**CQ2**	Double acting, Single rod	Excludes models with a rubber bumper or mounting bracket
Non-rotating rod	**CQ2K**	Double acting, Single rod	Excludes models with a rubber bumper or mounting bracket

How to Order

Standard model no. – XC9

Adjustable stroke cylinder/Adjustable retraction type

(After adjusting the stroke, the double-side cushion type becomes a single-side cushion type. CQ2 is without cushion.)

Specifications

Stroke adjustment range [mm]	0 to 10
Specifications other than the above	Same as the standard type

Precautions

⚠ Warning

1. **When air is supplied to the cylinder, if the stroke adjustment bolt is loosened in excess of the allowable stroke adjustment amount, be aware that the stroke adjustment bolt could fly off or air could be discharged, which could injure personnel or damage the peripheral equipment.**
2. **Adjust the stroke when the cylinder is not pressurized. If it is adjusted while in a pressurized state, the seal of the adjustment section could become deformed, leading to air leakage.**

Symbol

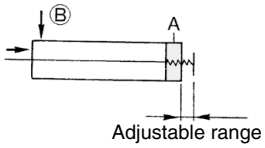

Dimensions (Dimensions other than those below are the same as those of the standard type.)

ø12, ø16, ø40 to ø100

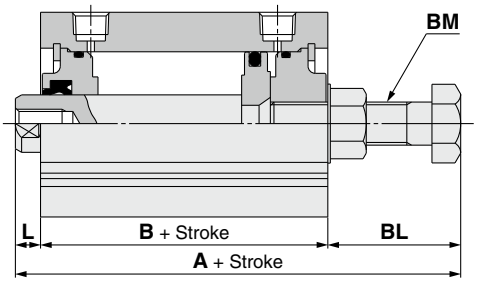

ø20, ø25, ø32

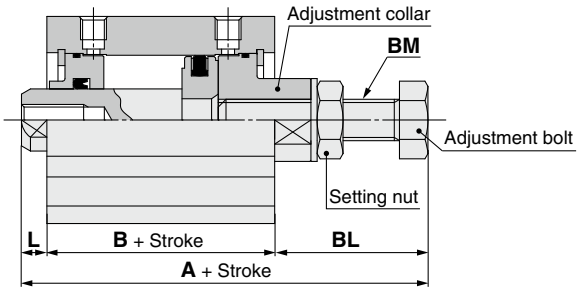

∗ When securing the adjustment bolt, clamp the width across flats of the adjustment collar with a tool, such as a spanner and tighten the setting nut with a tool, such as other spanner to secure the bolt firmly.

[mm]

Bore size [mm]	A		B		L	BL	BM	Manufacturable stroke
	50 mm stroke or less	75, 100 mm stroke	50 mm stroke or less	75, 100 mm stroke				
12	52 (59.2)	—	25.2 (32.4)	—	3.5	23.3	M5 x 0.8	5 to 30
16	53 (63)	—	26 (36)	—	3.5	23.5	M6 x 1	
20	61 (73)	—	26 (38)	—	4.5	30.5	M8 x 1.25	5 to 50
25	63.5 (73.5)	—	29 (39)	—	5	29.5	M8 x 1.25	
32	65.5 (75.5)	75.5	30.5 (40.5)	40.5	7	28	M8 x 1.25	5 to 50
40	84 (94)	94	40 (50)	50	7	37	M12 x 1.5	75, 100
50	84.5 (94.5)	94.5	40.5 (50.5)	50.5	8	36	M12 x 1.5	10 to 50 75, 100
63	88.5 (98.5)	98.5	42 (52)	52	8	38.5	M16 x 1.5	
80	109.5 (119.5)	119.5	51 (61)	61	10	48.5	M20 x 1.5	
100	125 (135)	135	60.5 (70.5)	70.5	12	52.5	M24 x 1.5	

∗ ( ): Dimensions with auto switch magnet
∗ The symbol is X526 for the long stroke type. ⇨ p. 194

12 Dual Stroke Cylinder/Double Rod Type

Symbol
-XC10

2 cylinders are integrated into 1 in a back-to-back configuration allowing for the cylinder stroke to be controlled in three steps.

Description	Model	Action	Note
Compact cylinder	**CQ2**	Double acting, Single rod	Excludes models with a mounting bracket
Non-rotating rod	**CQ2K**	Double acting, Single rod	Excludes models with a mounting bracket
Air-hydro type	**CQ2H**	Double acting, Single rod	Excludes models with a mounting bracket

Specifications

Bore size [mm]	Max. manufacturable stroke [mm]
12, 16	60 (Max. 30 on one side)
20, 25	100 (Max. 50 on one side)
32, 40	200 (Max. 100 on one side)
50 to 100	200 (Max. 100 on one side)

Specifications other than the above	Same as the standard type

How to Order

CQ2B [Bore size] − [Stroke S_1] + [Stroke S_2] D(C)(M)(Z) − XC10

Dual stroke cylinder

Symbol

Function

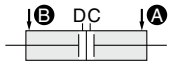

When air pressure is supplied to ports ❹ and ❸, both strokes A and B retract.

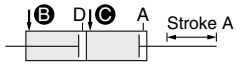

When air pressure is supplied to ports ❸ and ❷, stroke A is operated.

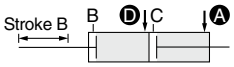

When air pressure is supplied to ports ❹ and ❶, stroke B is operated.

When air pressure is supplied to ports ❷ and ❶, both strokes A and B are operated.

Dimensions (Dimensions other than those below are the same as those of the standard type.)

ø12 to ø25
With auto switch magnet

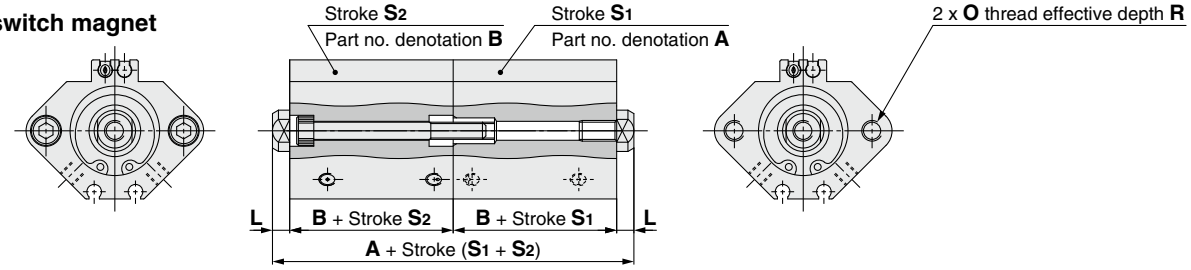

∗ In the case of bore sizes ø12 to ø25 with an auto switch, port directions are different.

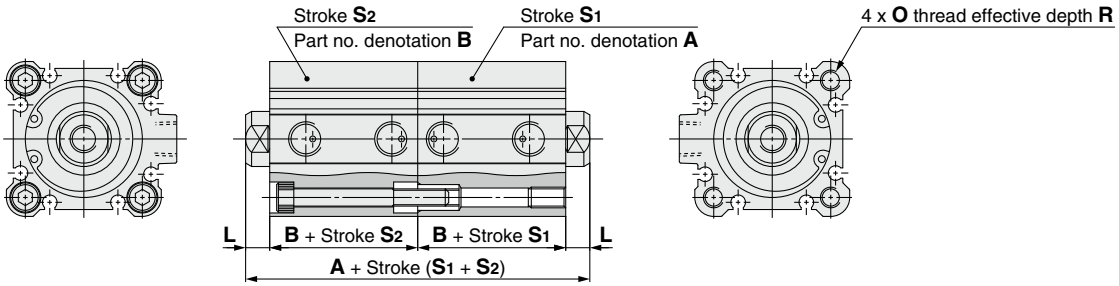

∗ Secure the body with the threaded portion at the tip of the piston rod on both sides or with the cylinder tube on the stroke S_1 side tapped.

[mm]

Bore size [mm]	A			B		L	O	R
	50 st or less for both S_1 and S_2	Combination of 50 st or less, 75, 100 st	75, 100 st for both S_1 and S_2	50 st or less	75, 100 st			
12	41 (63)	—	—	17 (28)	—	3.5	M4 x 0.7	7
16	44 (68)	—	—	18.5 (30.5)	—	3.5	M4 x 0.7	7
20	48 (72)	—	—	19.5 (31.5)	—	4.5	M6 x 1.0	10
25	55 (75)	—	—	22.5 (32.5)	—	5	M6 x 1.0	10
32	60 (80)	70 (80)	80 (80)	23 (33)	33 (33)	7	M6 x 1.0	10
40	73 (93)	83 (93)	93 (93)	29.5 (39.5)	39.5 (39.5)	7	M6 x 1.0	10
50	77 (97)	87 (97)	97 (97)	30.5 (40.5)	40.5 (40.5)	8	M8 x 1.25	14
63	88 (108)	98 (108)	108 (108)	36 (46)	46 (46)	8	M10 x 1.5	18
80	107 (127)	117 (127)	127 (127)	43.5 (53.5)	53.5 (53.5)	10	M12 x 1.75	22
100	130 (150)	140 (150)	150 (150)	53 (63)	63 (63)	12	M12 x 1.75	22

∗ ( ): Dimensions with auto switch
∗ Applicable stroke available in 5 mm increments

13 Dual Stroke Cylinder/Single Rod Type

Symbol **-XC11**

Two cylinders can be integrated by connecting them in line, and the cylinder stroke can be controlled in two stages in both directions.

Description	Model	Action	Note
Compact cylinder	**CQ2**	Double acting, Single rod	Excludes models with a mounting bracket
Non-rotating rod	**CQ2K**	Double acting, Single rod	Excludes models with a mounting bracket
Air-hydro type	**CQ2H**	Double acting, Single rod	Excludes models with a mounting bracket

Specifications

Bore size [mm]	Max. manufacturable stroke [mm]
12, 16	30 for both S_1 and S_2
20 to 100	50 for both S_1 and S_2
Specifications other than the above	Same as the standard type

* The max. manufacturable stroke is the combination of stroke 1 and stroke 2.

How to Order

CQ2B [Bore size] − [Stroke S_1] + [Stroke S_2–S_1] D(C)(M)(Z) — XC11

Dual stroke cylinder/Single rod type

Functional description of dual stroke cylinder

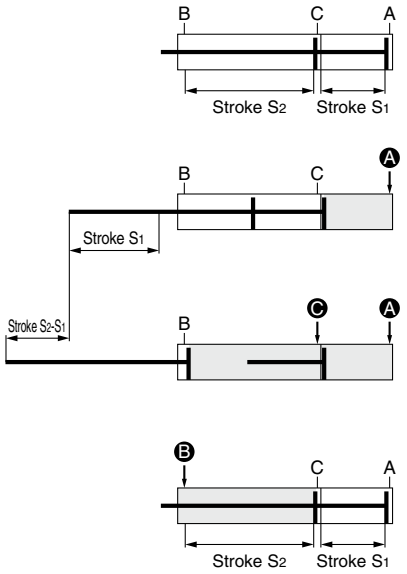

1) Initial state (0 stroke position)

2) 1st stage: Stroke S_1 operation
When air pressure is supplied to the A port, the rod operates stroke S_1.

3) 2nd stage: Stroke S_2-S_1 operation
Following the 1st stage, when air pressure is supplied to the C port, the rod operates stroke S_2-S_1.

4) Cylinder retraction
When air pressure is supplied to the B port, the rod retracts completely.

Stroke S_1 and stroke S_2 can be operated individually.

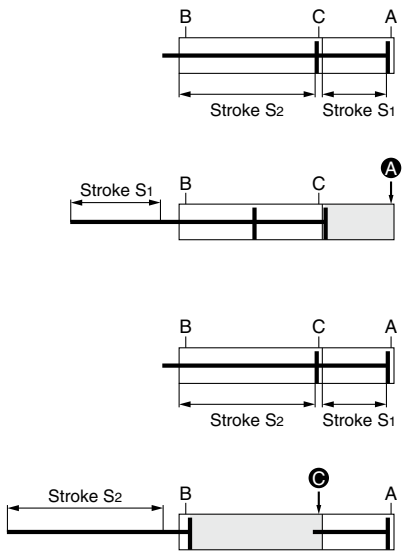

Stroke S_1 operation

1) Initial state (0 stroke position)

2) Operation
When air pressure is supplied to the A port, the rod operates stroke S_1.

Stroke S_2 operation

1) Initial state (0 stroke position)

2) Operation
When air pressure is supplied to the C port, the rod operates stroke S_2.

Double output is possible.

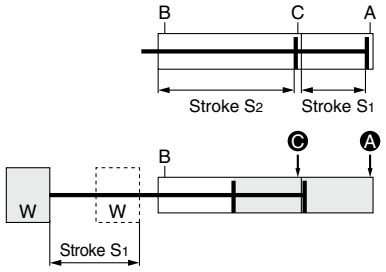

1) Initial state (0 stroke position)

2) Double output
When air pressure is supplied to the A and C ports at the same time, double output can be obtained in the stroke S_1 range.

Precautions

⚠ Caution

1. **Remove the temporary fixing nut and flat washer from the mounting bolt, and secure the cylinder properly with the mounting bolt.**
2. **Although the cylinder can be detached by removing the nut, do not detach it for purposes other than replacing the seal.**
3. **Do not supply air to the cylinder until it has been properly secured with the mounting bolt.**
   If air is supplied prematurely, the cylinder may lurch, resulting in injury to nearby personnel or damage to peripheral equipment.
4. **The removed nut and flat washer are not used to secure the body.**

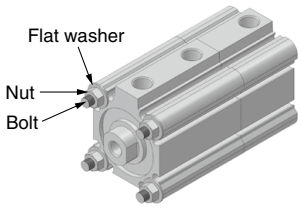

13 Dual Stroke Cylinder/Single Rod Type

Symbol
-XC11

Dimensions (Dimensions other than those below are the same as those of the standard type.)

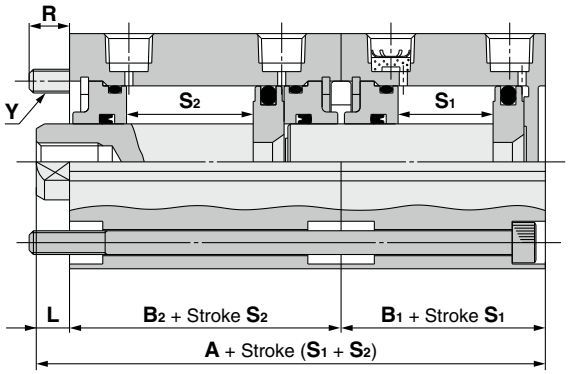

∗ This cylinder includes mounting bolts to secure the cylinder.

[mm]

Bore size [mm]	A	B1	B2	L	R	Y	Stroke Both S1 and S2
12	45.7 (63.9)	17 (28)	25.2 (32.4)	3.5	6.3 (8.1)	M3 x 0.5	5 to 30
16	48 (70)	18.5 (30.5)	26 (36)	3.5	9 (7)		
20	50 (74)	19.5 (31.5)	26 (38)	4.5	11.5 (7.5)	M5 x 0.8	5 to 50
25	56.5 (76.5)	22.5 (32.5)	29 (39)	5	10.5		
32	60.5 (80.5)	23 (33)	30.5 (40.5)	7	8.5		
40	76.5 (96.5)	29.5 (39.5)	40 (50)	7	7.5		
50	79 (99)	30.5 (40.5)	40.5 (50.5)	8	12	M6 x 1	10 to 50
63	86 (106)	36 (46)	42 (52)	8	12.5	M8 x 1.25	
80	104.5 (124.5)	43.5 (53.5)	51 (61)	10	19	M10 x 1.5	
100	125.5 (145.5)	53 (63)	60.5 (70.5)	12	15		

∗ ( ): Dimensions with auto switch magnet
∗ The symbol is X636 for the long stroke type. ⇨ p. 195

14 With Split Pins for Double Clevis Pin/Double Knuckle Joint Pin and Flat Washers

Symbol **-XC26**

A pin for double clevis or double knuckle joint has been changed to a split pin, and split pins and flat washers have been added.

Description	Model	Action	Note
Compact cylinder	**CQ2**	Double acting, Single rod Single acting (Spring return/extend)	Double clevis (D) mounting only
Long stroke	**CQ2**	Double acting, Single rod	
Non-rotating rod*1	**CQ2K**	Double acting, Single rod	
Anti-lateral load	**CQ2□S**	Double acting, Single rod	
Water resistant*2	**CQ2-R/V**	Double acting, Single rod	
With end lock*3	**CBQ2**	Double acting, Single rod	

Specifications:
Same as those of the standard type

*1 Applicable to ø40 to ø63
*2 Applicable to ø40 to ø100
*3 Applicable to ø32 to ø100

How to Order

CQ2D [Standard model no.] **– XC26**
- Double clevis type
- With double clevis pin, split pin, and flat washer

Y – [G012, G016, G02, G03 G04, G05, G08, G10] **– XC26**
- Double knuckle joint
- With double knuckle joint pin, split pin, and flat washer

CQ – [D012, D016, D020, D025 D032, D040, D050, D063, D080, D100] **– XC26**
- Double clevis
- With double clevis pin, split pin, and flat washer

IY – [G012, J015, G02, G03 G04, G05, G08, G10] **– XC26**
- Clevis pin/Knuckle joint pin
- With clevis pin, knuckle joint pin, split pin, and flat washer

Dimensions (Dimensions other than those below are the same as those of the standard type.)

Double clevis

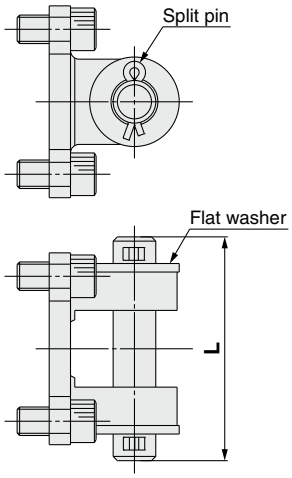

* Body mounting bolts, pin, split pins, and flat washers are included.

Double knuckle joint

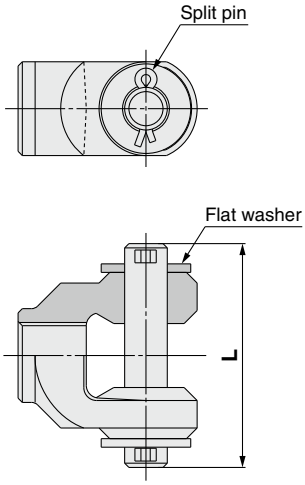

* A pin, split pins, and flat washers are included.

Clevis pin/Knuckle joint pin

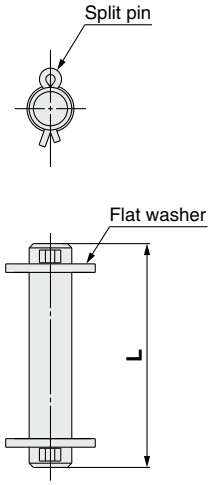

* Split pins and flat washers are included.

[mm]

Bore size [mm]	Double clevis	Double knuckle joint	Clevis pin Knuckle joint pin	L
12	CQ-D012-XC26	Y-G012-XC26	IY-G012-XC26	21
16	CQ-D016-XC26	Y-G016-XC26	IY-J015-XC26	23
20	CQ-D020-XC26	Y-G02-XC26	IY-G02-XC26	31
25	CQ-D025-XC26	Y-G03-XC26	IY-G03-XC26	36.5
32	CQ-D032-XC26	Y-G04-XC26	IY-G04-XC26	52.5
40	CQ-D040-XC26			
50	CQ-D050-XC26	Y-G05-XC26	IY-G05-XC26	66
63	CQ-D063-XC26			
80	CQ-D080-XC26	Y-G08-XC26	IY-G08-XC26	78
100	CQ-D100-XC26	Y-G10-XC26	IY-G10-XC26	86

15 Double Clevis Width / Double Knuckle Width 12.5 mm, 16.5 mm, or 19.5 mm: With Double Clevis and Double Knuckle Joint

Symbol **-XC26□**

3 different double clevis widths and double knuckle joint widths are selectable: 12.5 mm, 16.5 mm, or 19.5 mm

Description	Model	Action	Note
Compact cylinder	**CQ2**	Double acting, Single rod	Applicable to ø32 to ø63 Double clevis (D) mounting only
Long stroke	**CQ2**		
Anti-lateral load	**CQ2□S**		

Specifications:
Same as those of the standard type

How to Order

CQ2D [Standard model no.*1] **– XC26** [A] [ ]

- **Double clevis type**
- **With double clevis pin, split pin, and flat washer**
- **Suffix**

A*2	Width 16.5 mm
B*2	Width 19.5 mm
C	Width 12.5 mm

*2 Not available for bore size 32 mm

- **Made to order**

Nil	None
C35	XC35 specification
C88*3	XC88 specification
C89*3	XC89 specification
C91*3	XC91 specification

*3 With auto switch magnet only

*1 Can be ordered with a rod end bracket (double knuckle joint)

CQ – [D032, D040, D050, D063] **– XC26** [A]

- **Double clevis**
- **With double clevis pin, split pin, and flat washer**
- **Suffix**

A*1	Width 16.5 mm
B*1	Width 19.5 mm
C	Width 12.5 mm

*1 Not available for bore size 32 mm

Y – [G04, G05] **– XC26** [A]

- **Double knuckle joint**
- **With double knuckle joint pin, split pin, and flat washer**
- **Suffix**

A	16.5 mm
B	19.5 mm
C	12.5 mm

IY – [G04, G05] **– XC26**

- **Clevis pin/Knuckle joint pin**
- **With clevis pin, knuckle joint pin, split pin, and flat washer**

Applicable Made to Order Options

Series	Made to order			
	XC35	**XC88**	**XC89**	**XC91**
Compact cylinder	●	●	●	—
Long stroke	●	●	●	●
Anti-lateral load	—	—	●	●

* For details on XC35 ⇨ p. 188
For details on XC88, 89, and 91 ⇨ p. 190

Dimensions (Dimensions other than those below are the same as those of the standard type.)

Double clevis

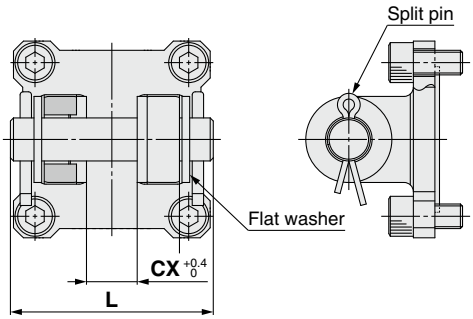

* Body mounting bolts, pin, split pins, and flat washers are included.

Double knuckle joint

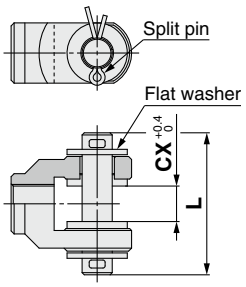

* A pin, split pins, and flat washers are included.

Clevis pin/Knuckle joint pin

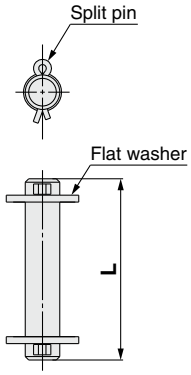

* Split pins and flat washers are included.

[mm]

Bore size [mm]	Double clevis	Double knuckle joint	Clevis pin Knuckle joint pin	CX	L
32	CQ-D032-XC26C	Y-G04-XC26C	IY-G04-XC26	12.5	52.5
40	CQ-D040-XC26A	Y-G04-XC26A		16.5	
	CQ-D040-XC26B	Y-G04-XC26B		19.5	
	CQ-D040-XC26C	Y-G04-XC26C		12.5	
50	CQ-D050-XC26A	Y-G05-XC26A	IY-G05-XC26	16.5	66
	CQ-D050-XC26B	Y-G05-XC26B		19.5	
	CQ-D050-XC26C	Y-G05-XC26C		12.5	
63	CQ-D063-XC26A	Y-G05-XC26A		16.5	
	CQ-D063-XC26B	Y-G05-XC26B		19.5	
	CQ-D063-XC26C	Y-G05-XC26C		12.5	

16 Double Clevis Pin/Double Knuckle Joint Pin Material: Stainless Steel 304

Symbol **-XC27**

To prevent the oscillating portion of the double clevis or the double knuckle joint from rusting, the material of the pin and the retaining ring has been changed to stainless steel.

Description	Model	Action
Compact cylinder	CQ2	Double acting, Single rod*1
		Single acting (Spring return/extend)*1
Long stroke	CQ2	Double acting, Single rod
Anti-lateral load	CQ2□S	Double acting, Single rod
Non-rotating rod	CQ2K	Double acting, Single rod

*1 Excludes cylinders with double knuckle joint bracket in How to Order

Stainless steel rod end brackets (single knuckle joint, double knuckle joint) and accessories (rod end nut) are also available.
For details ⇨ p. 34

How to Order

CQ2D [**Standard model no.**] **–XC27**
- Double clevis type
- Double clevis pin made of stainless steel

Y – [**G012, G016, G02, G03, G04, G05, G08, G10**] **–XC27**
- Double knuckle joint
- Double knuckle joint pin made of stainless steel

IY – [**G012*1, G02, G03, G04, G05, G08, G10**] **–XC27**
- Clevis pin/ Knuckle pin
- Clevis pin Knuckle pin made of stainless steel

*1 Stainless steel specification for IY-J015 (ø16 knuckle pin) is IY-J015SUS.

Specifications

Mounting type	Double clevis type (D), double knuckle joint only
Pin and retaining ring material	Stainless steel 304
Specifications other than the above	Same as the standard type

17 With Coil Scraper

Symbol **-XC35**

Removes frost, ice, weld spatter, cutting chips, etc. adhered to the piston rod, protecting the seals.

Description	Model	Action	Note
Compact cylinder	CQ2	Double acting, Single rod	Applicable to ø32 to ø100
	CQ2W	Double acting, Double rod	Applicable to ø32 to ø100
Axial piping	CQP2	Double acting, Single rod	Applicable to ø32 to ø100 Excludes models with a mounting bracket
Long stroke	CQ2	Double acting, Single rod	Applicable to ø32 to ø100

How to Order

[**Standard model no.**] **– XC35**
- With coil scraper

Specifications: Same as those of the standard type

Dimensions (Dimensions other than those below are the same as those of the standard type.)

Double acting, Single rod

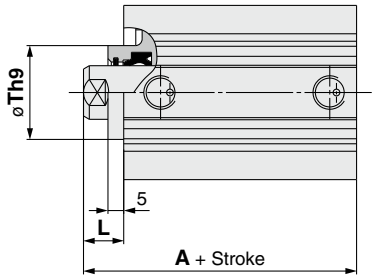

[mm]

Bore size [mm]	A			L		T
	50 mm stroke or less	75, 100 mm stroke	125 to 300 mm stroke	100 mm stroke or less	125 to 300 mm stroke	
32	35 (45)	45	62.5	12	17	$23^{+0}_{-0.052}$
40	41.5 (51.5)	51.5	72	12	17	$28^{+0}_{-0.052}$
50	43.5 (53.5)	53.5	73.5	13	18	$35^{+0}_{-0.062}$
63	49 (59)	59	75	13	18	$35^{+0}_{-0.062}$
80	58.5 (68.5)	68.5	86	15	20	$43^{+0}_{-0.062}$
100	70 (80)	80	97.5	17	22	$59^{+0}_{-0.074}$

* ( ): Dimensions with auto switch magnet

Double acting, Double rod

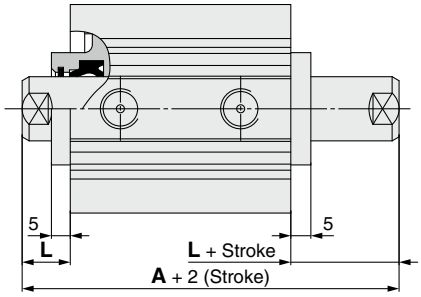

[mm]

Bore size [mm]	A		L
	50 mm stroke or less	75, 100 mm stroke	
32	54.5 (64.5)	64.5	12
40	64 (74)	74	12
50	66.5 (76.5)	76.5	13
63	68 (78)	78	13
80	81 (91)	91	15
100	94.5 (104.5)	104.5	17

* ( ): Dimensions with auto switch magnet

18 With Boss on Rod End

Symbol **-XC36**

Cylinder with boss on rod end

Description	Model	Action
Compact cylinder	CQ2	Double acting, Single rod
		Single acting (Spring return/extend)
	CQ2W	Double acting, Double rod
Long stroke*1	CQ2	Double acting, Single rod
Non-rotating rod*1	CQ2K	Double acting, Single rod
	CQ2KW	Double acting, Double rod
Axial piping	CQP2	Double acting, Single rod
		Single acting (Spring return/extend)

*1 The standard model can be used for long strokes and non-rotating rod types (single rod or double rod).
* For the double rod type, it comes with boss for both sides.
* Excludes models with a mounting bracket
* Excludes ø125 or more

How to Order

Standard model no. – **XC36**

With boss on rod end

Specifications:
Same as those of the standard type

Dimensions (Dimensions other than those below are the same as those of the standard type.)

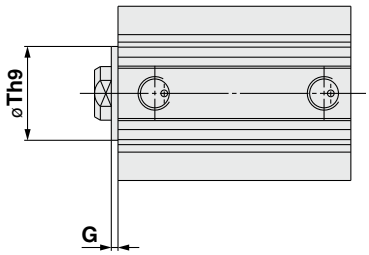

[mm]

Bore size [mm]	Th9	G
12	$15^{0}_{-0.043}$	1.5
16	$20^{0}_{-0.052}$	1.5
20	$13^{0}_{-0.043}$	2
25	$15^{0}_{-0.043}$	2
32	$21^{0}_{-0.052}$	2
40	$28^{0}_{-0.052}$	2
50	$35^{0}_{-0.062}$	2
63	$35^{0}_{-0.062}$	2
80	$43^{0}_{-0.062}$	2
100	$59^{0}_{-0.074}$	2

19 Grease for Food Processing Equipment

Symbol **-XC85**

Food grade grease (certified by NSF-H1) is used.

Description	Model	Action
Compact cylinder	CQ2	Double acting, Single rod
	CQ2	Single acting (Spring return/extend)
	CQ2W	Double acting, Double rod
Large bore size	CQ2	Double acting, Single rod
	CQ2W	Double acting, Double rod
Long stroke	CQ2	Double acting, Single rod
Non-rotating rod	CQ2K	Double acting, Single rod
	CQ2KW	Double acting, Double rod
Water resistant	CQ2-R/V	Double acting, Single rod
	CQ2W-R/V	Double acting, Double rod
Axial piping	CQP2	Double acting, Single rod
	CQP2	Single acting (Spring return/extend)
Anti-lateral load	CQ2□S	Double acting, Single rod
With end lock	CBQ2	Double acting, Single rod

How to Order

Standard model no. – **XC85**

Grease for food processing equipment

⚠ Warning
Precautions

Be aware that smoking cigarettes, etc., after your hands have come into contact with the grease used in this cylinder can create a gas that is hazardous to humans.

<Not installable>
Food zone····· An environment where food which will be sold as merchandize, directly touches the cylinder's components
Splash zone····· An environment where food which will not be sold as merchandize, directly touches the cylinder's components
<Installable>
Non-food zone····· An environment where there is no contact with food

Specifications

Grease	Grease for food processing equipment
Dimensions	Same as the standard type
Specifications other than the above	Same as the standard type

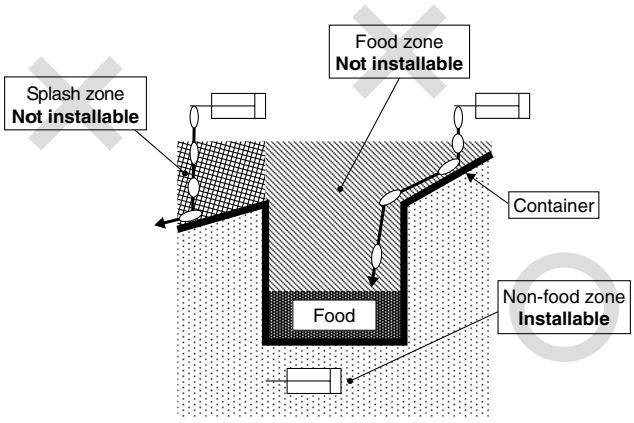

* Avoid using this product in the food zone. (Refer to the figure above.)
* When the product is used in an area of liquid splash, or a water resistant function is required for the product.
* Operate without lubrication from a pneumatic system lubricator.
* Use the following grease pack for the maintenance work.
GR-H-010 (Grease: 10 g)
* Please contact SMC for details on the maintenance intervals for this cylinder, which differ from those of the standard cylinder.

Symbol

20 Spatter-resistant Coil Scraper, Lube-retainer, Grease for Welding (Piston rod: Stainless steel 304) -XC88

21 Spatter-resistant Coil Scraper, Lube-retainer, Grease for Welding (Piston rod: S45C) -XC89

Reduces spatter adhesion and improves durability by the use of the coil scraper, Lube-retainer and grease for welding

22 Spatter-resistant Coil Scraper, Grease for Welding (Piston rod: S45C) -XC91

With coil scraper and grease for welding

Series	Description	Model	Action	Note	XC88	XC89	XC91
CQ2	Compact cylinder	CQ2	Double acting, Single rod	With auto switch magnet only	●	●	●
	Long stroke	CQ2	Double acting, Single rod		●	●	—
	Anti-lateral load	CQ2□S	Double acting, Single rod		●	●	—

Made to Order

Part no.	Piston rod material (Hard chrome plating)		Coil scraper	Lube-retainer	Grease for welding
	S45C	Stainless steel 304			
-XC88	—	●	●	●	●
-XC89	●	—	●	●	●
-XC91	●	—	●	—	●

∗ Use the -XC91 in a place where the distance from the welding portion is far and the spatter scattering is minimized.

How to Order

CDQ2 | Standard model no. | — XC89

Spatter-resistant rod material

XC88	Stainless steel 304
XC89	S45C
XC91	S45C

Standard

Specifications

Bore size	ø32, ø40, ø50, ø63, ø80, ø100
Mounting bracket	Excludes the compact foot bracket
Type	Pneumatic
Mounting bolt for the through-hole type	Not included
Dimensions	See below.
Specifications other than the above	Same as the standard type

Long stroke

Specifications

Mounting bracket	Excludes the compact foot bracket
Type	Pneumatic
Cushion	Rubber bumper
Dimensions	See below.
Specifications other than the above	Same as the standard type

Anti-lateral load

Specifications

Mounting bracket	Excludes the compact foot bracket
Dimensions	See below.
Specifications other than the above	Same as the standard type

Dimensions

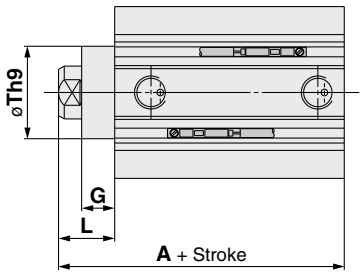

[mm]

Bore size [mm]	XC88, 89						XC91			
	A			G	L	Th9	A	G	L	Th9
	Standard	Long stroke	Anti-lateral load							
32	50	67.5	60	10	17	$23^{0}_{-0.052}$	45	5	12	$23^{0}_{-0.052}$
40	56.5	77	66.5	10	17	$28^{0}_{-0.052}$	51.5	5	12	$28^{0}_{-0.052}$
50	58.5	78.5	68.5	10	18	$35^{0}_{-0.062}$	53.5	5	13	$35^{0}_{-0.062}$
63	64	80	74	10	18	$35^{0}_{-0.062}$	59	5	13	$35^{0}_{-0.062}$
80	73.5	91	83.5	10	20	$43^{0}_{-0.062}$	68.5	5	15	$43^{0}_{-0.062}$
100	85	102.5	95	10	22	$59^{0}_{-0.074}$	80	5	17	$59^{0}_{-0.074}$

23 Dust-resistant Actuator

Symbol **-XC92**

For use in environments with airborne micro-powder (20 to 30 μm or less) such as ceramic powder, toner powder, paper powder, and metallic powder (Excludes weld spatter) 4 times stronger than the standard model

Description	Model	Action	Note
Compact cylinder	**CQ2**	Double acting, Single rod	Applicable to ø32 to ø100

Specifications

Min. operating pressure	0.1 MPa
Body option	Excludes the type with boss on the head end
Mounting bracket	Mounting brackets are not available for ø32.
Specifications other than the above	Same as the standard type

How to Order

Standard model no. — **XC92**

Dust-resistant actuator

Dimensions (Dimensions other than those below are the same as those of the standard type.)

ø32

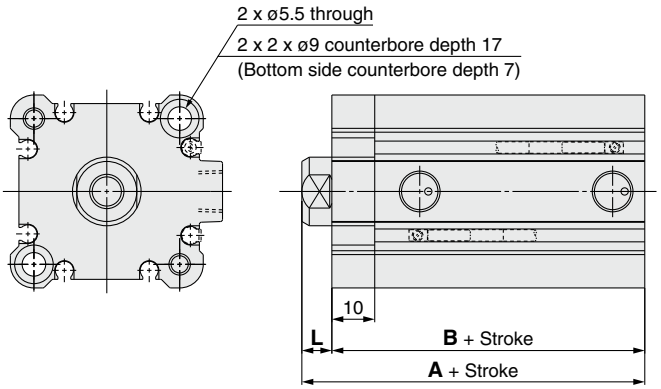

ø40 to ø100

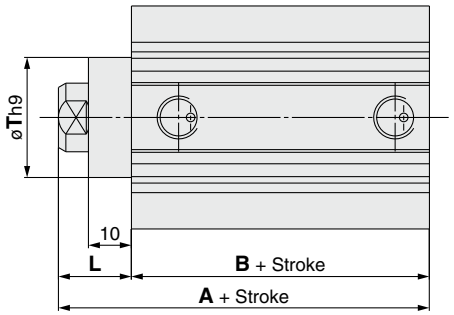

[mm]

Bore size [mm]	A		B		L	T
	Without auto switch	With auto switch	Without auto switch	With auto switch		
32	40 (50)	50	33 (43)	43	7	—
40	46.5 (56.5)	56.5	29.5 (39.5)	39.5	17	28
50	48.5 (58.5)	58.5	30.5 (40.5)	40.5	18	35
63	54 (64)	64	36 (46)	46	18	35
80	63.5 (73.5)	73.5	43.5 (53.5)	53.5	20	43
100	75 (85)	85	53 (63)	63	22	59

∗ Dimensions inside ( ) are for 75, 100 st.

24 Special Port Location

Symbol **-X144**

This type is available for changing port location. (Only for ø12 to ø25 with auto switch magnet)

Description	Model	Action	Note
Compact cylinder	**CQ2**	Double acting, Single rod	Applicable to ø12 to ø25
		Single acting (Spring return/extend)	
	CQ2W	Double acting, Double rod	

ø12, ø16

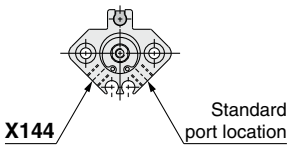

ø20, ø25

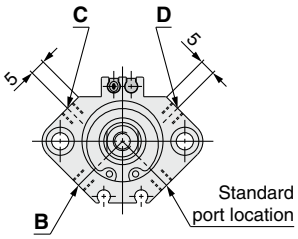

How to Order

Standard model no. — **X144** **B**

Special port location

In the case of CDQ2□20, 25, specify the port location with B, C, and D.

Specifications: Same as those of the standard type

25 Special Rod End for Double Rod Cylinder

Symbol **-X235**

A male thread is used at one piston rod end and a female thread is used at the other end for the double rod cylinder.

Description	Model	Action	Note
Compact cylinder	**CQ2W**	Double acting, Double rod	Foot, compact foot, and flange only Excludes body option M (Rod end male thread) and the air-hydro type
Large bore size	**CQ2W**	Double acting, Double rod	Excludes body option M (Rod end male thread)

Standard model no. — **X235**

Piston rod end
Male thread, Female thread

Specifications: Same as those of the standard type

Dimensions (Dimensions other than those below are the same as those of the standard type.)

ø12 to ø25

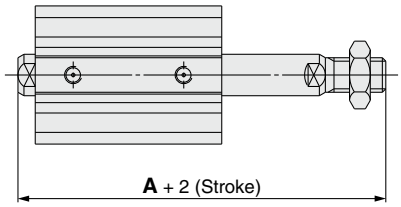

ø32 to ø200

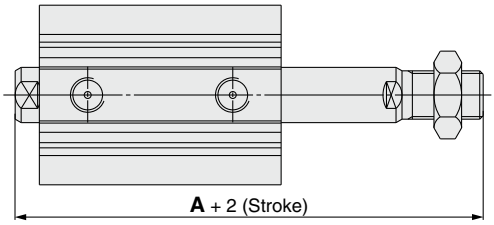

ø12 to ø25 (With auto switch magnet)

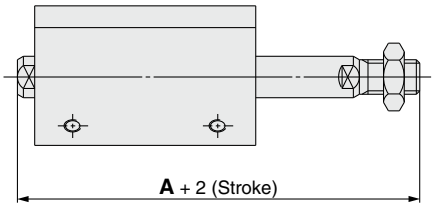

Bore size [mm]	A	
	50 mm stroke or less	75 mm stroke or more
12	42.7 (49.9)	—
16	45 (55)	—
20	49 (61)	—
25	56.5 (66.5)	—
32	66 (76)	76
40	75.5 (85.5)	85.5
50	82 (92)	92
63	83.5 (93.5)	93.5

Bore size [mm]	A	
	50 mm stroke or less	75 mm stroke or more
80	104.5 (114.5)	114.5
100	116 (126)	126
125	157	
140	157	
160	172	
180	183	
200	190	

∗ ( ): Dimensions with auto switch

26 Fluororubber Seals

Symbol **-X271**

The material of the seals has been changed to fluororubber.

Description	Model	Action	Note
Compact cylinder	**CQ2**	Double acting, Single rod	With rubber bumper: The bumper material cannot be changed to fluororubber. Excludes the air-hydro type
	CQ2	Single acting (Spring return/extend)	
	CQ2W	Double acting, Double rod	
Large bore size	**CQ2**	Double acting, Single rod	
	CQ2W	Double acting, Double rod	
Long stroke	**CQ2**	Double acting, Single rod	
Anti-lateral load	**CQ2□S**	Double acting, Single rod	
Axial piping	**CQP2**	Double acting, Single rod	
	CQP2	Single acting (Spring return/extend)	

Standard model no. — **X271**

Fluororubber seals

Specifications: Same as those of the standard type

27 Long Stroke for Adjustable Extension Stroke Cylinder (-XC8)

Symbol
-X525

Description	Model	Action	Note
Compact cylinder	CQ2	Double acting, Single rod	Excludes models with a rubber bumper or mounting bracket

Standard model no. — **X525**

• Long stroke for -XC8

Specifications: Same as those of the standard type

Dimensions (Dimensions other than those below are the same as those of the standard type.)

ø12 to ø25 (Without auto switch magnet)

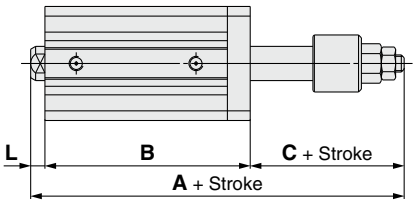

∗ Only the through-hole mounting type is available.

ø12 to ø25 (With auto switch magnet)

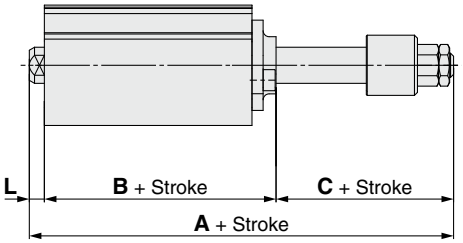

ø32 to ø100

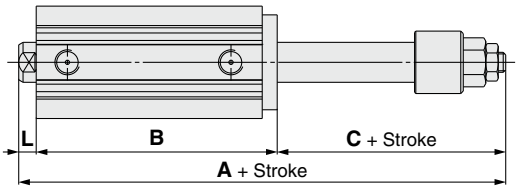

ø12, ø16

Bore size \ Symbol / Stroke	A				B				C	L	Applicable stroke
	35 st	40 st	45 st	50 st	35 st	40 st	45 st	50 st			
12	99.9	104.9	109.9	114.9	72.4	77.4	82.4	87.4	24	3.5	35, 40 45, 50
16	104.5	109.9	114.9	119.5	77	82	87	92	24	3.5	

ø20 to ø100

Bore size \ Symbol / Stroke	A						B						C	L	Applicable stroke
	55 to 75 st	80 to 100 st	105 to 125 st	130 to 150 st	155 to 175 st	180 to 200 st	55 to 75 st	80 to 100 st	105 to 125 st	130 to 150 st	155 to 175 st	180 to 200 st			
20	155.5	180.5	—	—	—	—	122	147	—	—	—	—	29	4.5	55 to 100
25	156	181	—	—	—	—	122	147	—	—	—	—	29	5	
32	—	—	213.5	238.5	263.5	288.5	—	—	171.5	196.5	221.5	246.5	35	7	105 to 200
40	—	—	223	248	273	298	—	—	181	206	231	256	35	7	
50	—	—	235.5	260.5	285.5	310.5	—	—	183.5	208.5	233.5	258.5	44	8	
63	—	—	237	262	287	312	—	—	187	212	237	262	42	8	
80	—	—	260	285	310	335	—	—	198	223	248	273	52	10	
100	—	—	273.5	298.5	323.5	348.5	—	—	209.5	234.5	259.5	284.5	52	12	

∗ The dimensions are the same with or without an auto switch magnet.
∗ Applicable stroke available in 5 mm increments

28 Long Stroke for Adjustable Retraction Stroke Cylinder (-XC9)

Symbol **-X526**

Description	Model	Action	Note
Compact cylinder	CQ2	Double acting, Single rod	Excludes models with a rubber bumper or mounting bracket

Standard model no. — **X526**

Specifications:
Same as those of the standard type

• **Long stroke for -XC9**

Dimensions (Dimensions other than those below are the same as those of the standard type.)

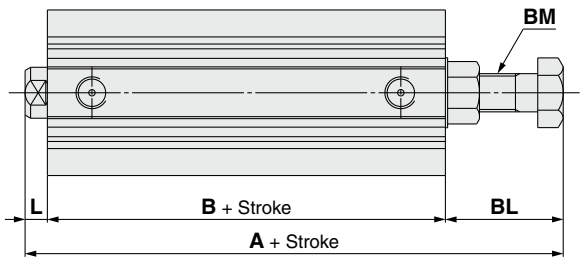

Bore size \ Symbol	A	B	L	BL	BM	Applicable stroke
12	59.2 (56.4)	32.4	3.5	23.3 (20.5)	M5 x 0.8	35, 40, 45, 50
16	64	37	3.5	23.5	M6 x 1.0	
20	74	39	4.5	30.5	M8 x 1.25	75, 100
25	73.5	39	5	29.5	M8 x 1.25	
32	75.5	40.5	7	28	M8 x 1.25	125, 150 175, 200
40	94	50	7	37	M12 x 1.5	
50	94.5	50.5	8	36	M12 x 1.5	
63	98.5	52	8	38.5	M16 x 1.5	
80	119.5	61	10	48.5	M20 x 1.5	
100	135	70.5	12	52.5	M24 x 1.5	

∗ ( ): Dimensions with auto switch magnet
∗ Intermediate strokes (available in 5 mm increments) are available with a spacer. The dimensions are the same as those of 75, 100, 125, 150, 175, 200 mm strokes.

29 Intermediate Stroke for Double Rod Cylinder

Symbol **-X633**

Description	Model	Action	Note
Compact cylinder	CQ2W	Double acting, Double rod	Excludes models with a mounting bracket
Large bore size	CQ2W		
Non-rotating rod	CQ2KW		

Standard model no. — **X633**

Specifications: Same as those of the standard type

Dimensions (Dimensions other than those below are the same as those of the standard type.)

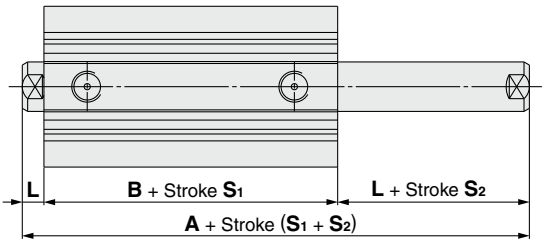

Bore size \ Symbol	C(D)Q2W A	C(D)Q2W B	C(D)Q2KW A	C(D)Q2KW B	L	Stroke S1	Stroke S2
12	32.2 (39.4)	25.2 (32.4)	37.2 (44.4)	30.2 (37.4)	3.5	5 to 30 mm stroke, 5 mm increments	6 to 29 mm stroke, 1 mm increments
16	33 (43)	26 (36)	38 (48)	31 (41)	3.5		
20	35 (47)	26 (38)	43 (55)	34 (46)	4.5	5 to 50 mm stroke, 5 mm increments	6 to 49 mm stroke, 1 mm increments
25	39 (49)	29 (39)	47 (57)	37 (47)	5		
32	44.5 (54.5)	30.5 (40.5)	53.5 (63.5)	39.5 (49.5)	7	For 5 to 50 mm stroke: 5 mm increments For 50 to 100 mm stroke: 25 mm increments	6 to 99 mm stroke, 1 mm increments
40	54 (64)	40 (50)	54 (64)	40 (50)	7		
50	56.5 (66.5)	40.5 (50.5)	56.5 (66.5)	40.5 (50.5)	8	For 10 to 50 mm stroke: 5 mm increments For 50 to 100 mm stroke: 25 mm increments	11 to 99 mm stroke, 1 mm increments
63	58 (68)	42 (52)	58 (68)	42 (52)	8		
80	71 (81)	51 (61)	—	—	10		
100	84.5 (94.5)	60.5 (70.5)	—	—	12		
125	115	83	—	—	16	For 10 to 50 mm stroke: 10 mm increments For 50 to 200 mm stroke: 25 mm increments For 200 to 300 mm stroke: 50 mm increments	15 to 295 mm stroke, 5 mm increments
140	115	83	—	—	16		
160	125	91	—	—	17		
180	136	102	—	—	17		
200	143	109	—	—	17		

∗ ( ): Dimensions with auto switch magnet
∗ Installing a spacer inside the standard cylinder tube, stroke S_1 has 5 mm increments for controlling intermediate strokes in 1 mm increments.
Example) In the case of CDQ2WB40-18DZ, stroke S_1 is 20 mm and stroke S_2 is 18 mm.
∗ For ø40 to ø100 cylinders with bumper, please consult with SMC.
∗ For ø32 to ø100 cylinders, the dimensions of the 75 and 100 mm strokes are the same as those of the dimensions with auto switch in the brackets.

30 Long Stroke for Dual Stroke Single Rod Cylinder

Symbol
-X636

Description	Model	Action	Note
Compact cylinder	**CQ2**	Double acting, Single rod	Excludes the both ends tapped type and models with a mounting bracket

C□Q2B [Bore size] − [Stroke S_1] + [Stroke S_2–S_1] D (C)(M)(Z) − X636

Long stroke for -XC11

Specifications: Same as those of the standard type

Applicable Strokes

[mm]

Bore size	Manufacturable stroke
ø12, ø16	S_2 35 to 50
ø20 to ø100	S_2 55 to 100
Specifications other than the above	Same as the standard type

∗ The manufacturable stroke range is the combination of stroke 1 and stroke 2.

Dimensions (Dimensions other than those below are the same as those of the standard type.)

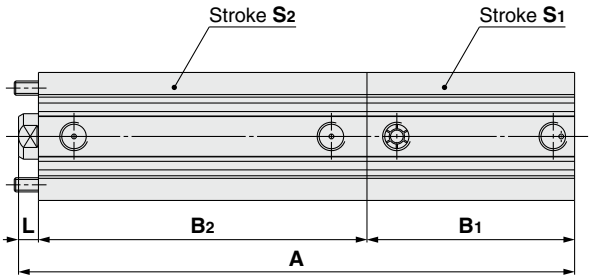

Bore Size: ø12, ø16

[mm]

Symbol / Bore size	A	B_1	B_2	L	Stroke range S_1	Stroke range S_2
ø12	52.9 (63.9) + Stroke (S_1 + S_2)	17 (28) + Stroke S_1	32.4 + Stroke S_2	3.5	5 to 30	35 to 50
ø16	58 (70) + Stroke (S_1 + S_2)	18.5 (30.5) + Stroke S_1	36 + Stroke S_2	3.5	5 to 30	35 to 50

Bore Size: ø20, ø25

[mm]

Symbol / Stroke / Bore size	A: Stroke S_2 55 to 75	A: Stroke S_2 80 to 100	B_1	B_2: Stroke S_2 55 to 75	B_2: Stroke S_2 80 to 100	L	Stroke range S_1	Stroke range S_2
ø20	137 (149) + Stroke S_1	162 (174) + Stroke S_1	19.5 (31.5) + Stroke S_1	113	138	4.5	5 to 50	55 to 100
ø25	141.5 (151.5) + Stroke S_1	166.5 (176.5) + Stroke S_1	22.5 (32.5) + Stroke S_1	114	139	5	5 to 50	55 to 100

Bore Size: ø32 to ø100

[mm]

Symbol / Stroke / Bore size	A: Stroke S_2 55 to 75, Stroke S_1 ≤ 50	A: Stroke S_2 55 to 75, Stroke S_1 55 to 75	A: Stroke S_2 80 to 100, Stroke S_1 ≤ 50	A: Stroke S_2 80 to 100, Stroke S_1 55 to 75	A: Stroke S_2 80 to 100, Stroke S_1 80 to 100	B_1: Stroke S_1 ≤ 50	B_1: Stroke S_1 55 to 75	B_1: Stroke S_1 80 to 100	B_2: Stroke S_2 55 to 75	B_2: Stroke S_2 80 to 100	L	Stroke range S_1	Stroke range S_2
ø32	145.4 (155.5) + Stroke S_1	230.5	170.5 (180.5) + Stroke S_1	255.5	280.5	23 (33) + Stroke S_1	108	133	115.5	140.5	7	5 to 100	55 to 100
ø40	161.5 (171.5) + Stroke S_1	246.5	186.5 (196.5) + Stroke S_1	271.5	296.5	29.5 (39.5) + Stroke S_1	114.5	139.5	125	150	7	5 to 100	55 to 100
ø50	164 (174) + Stroke S_1	249	189 (199) + Stroke S_1	274	299	30.5 (40.5) + Stroke S_1	115.5	140.5	125.5	150.5	8	10 to 100	55 to 100
ø63	171 (181) + Stroke S_1	256	196 (206) + Stroke S_1	281	306	36 (46) + Stroke S_1	121	146	127	152	8	10 to 100	55 to 100
ø80	189.5 (199.5) + Stroke S_1	274.5	214.5 (224.5) + Stroke S_1	299.5	324.5	43.5 (53.5) + Stroke S_1	128.5	153.5	136	161	10	10 to 100	55 to 100
ø100	210.5 (220.5) + Stroke S_1	295.5	235.5 (245.5) + Stroke S_1	320.5	345.5	53 (63) + Stroke S_1	138	163	145.5	170.5	12	10 to 100	55 to 100

∗ ( ): Dimensions with auto switch magnet
∗ Applicable stroke: Available in 5 mm increments

31 Cylinder Tube: With Concave Boss on Head End

Symbol
-X1876

Description	Model	Action	Note
Compact cylinder	CQ2	Double acting, Single rod	Applicable to ø32 to ø100
		Single acting (Spring return/extend)	Applicable to ø32 to ø50
Non-rotating rod	CQ2K	Double acting, Single rod	Applicable to ø32 to ø63
Anti-lateral load	CQ2□S	Double acting, Single rod	

Standard model no. — **X1876**

- **With concave boss on head end**

Specifications:
Same as those of the standard type

Dimensions (Dimensions other than those below are the same as those of the standard type.)

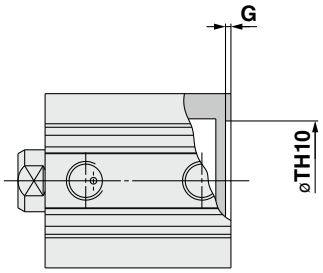

[mm]

Bore size [mm]	TH10	G
32	$30.9^{+0.100}_{0}$	1.4
40	$39.3^{+0.100}_{0}$	1.3
50	$48.7^{+0.100}_{0}$	2.1
63	$61.5^{+0.120}_{0}$	2.4
80	$78.3^{+0.120}_{0}$	2.7
100	$98.9^{+0.140}_{0}$	2.8

CQ2 Series
Specific Product Precautions 1

Be sure to read this before handling the products. For safety instructions as well as actuator and auto switch precautions, refer to the "Handling Precautions for SMC Products" and the "Operation Manual" on the SMC website: https://www.smcworld.com

<Precautions for each series>

Mounting

⚠ Caution

The CQ2 series compact cylinders are designed to create compact mechanical equipment and promote space saving. Thus, if it is used in the same manner as existing cylinders such as tie-rod cylinders, it may degrade the performance. Pay sufficient attention to the operating conditions when using.

1. Allowable lateral load

Lateral load that can apply to the piston rod end is limited. If a cylinder is used with a lateral load over the limit, it may cause air leakage due to abnormal friction of seals, galling of cylinder tubes and pistons, or abnormal friction of the bearing part. The lateral load applied to the piston rod must be within the allowable range indicated in this catalog. When the load exceeds the limit, use a double rod cylinder, install a guide, or change the bore size to suit the load in order to make the load within the allowable range. As a standard product, an anti-lateral load type cylinder that is resistant to approx. 2 times more than the existing compact CQ2 series is also available (page 73).

2. Connection with a workpiece

When a workpiece is mounted on the piston rod end, connect them aligning the center of piston rod and a workpiece. If they are off-center, lateral load is generated and phenomena mentioned in (1) may occur. In order not to apply the off-center load, use of a floating joint or simple joint is recommended.

3. Simultaneous use of multiple cylinders

It is difficult to control the speed of pneumatic cylinders. The following conditions cause speed change: change in supply pressure, load, temperature and lubrication, performance difference of each cylinder, deterioration of each part over time, etc. A speed controller can be used to control the speed of multiple cylinders simultaneously for a short period of time, but depending on conditions, it may not work as desired. If multiple cylinders cannot operate simultaneously, unreasonable force is applied to the piston rod because cylinder positions may not be the same. This may cause abnormal friction of seals and bearings, and galling of cylinder tubes and pistons. Do not use an application to operate several cylinders simultaneously by adjusting cylinder speed. If this is inevitable, use a high rigid guide against load, so that the cylinder is not damaged even when the each cylinder output is slightly different.

<Precautions for each series>

Retaining Ring Installation/Removal

⚠ Caution

1. For installation and removal, use an appropriate pair of pliers (tool for installing a type C retaining ring).
2. Even if a proper plier (tool for installing a type C retaining ring) is used, it is likely to inflict damage to a human body or peripheral equipment, as a retaining ring may be flown out of the tip of a plier (tool for installing a type C retaining ring). Be much careful with the popping of a retaining ring. Besides, be certain that a retaining ring is placed firmly into the groove of rod cover before supplying air at the time of installment.

<Precautions for the standard type ø4 to ø10>

Caution on Mounting Speed Controllers and Fittings

⚠ Caution

Since the cylinder port size of M3 x 0.5 is used, use the series models listed below when connecting speed controllers and fittings directly to cylinders.

1. After manually tightening speed controllers and fittings, tighten approximately a quarter turn more using a tightening tool. In cases where there are gaskets in two places such as universal elbows, universal tees, etc., double the additional tightening to a half turn. If screws are tightened excessively, air leakage may result due to broken threads or a deformed gasket. If screws are tightened insufficiently, looseness and accompanying air leakage are likely to occur.

For speed controllers

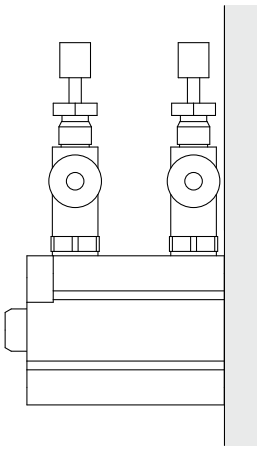

With Auto Switch Magnet

Bore size [mm]	**6, 10**
Port size	M3 x 0.5
AS12□1F-M3-02	○

Without Auto Switch Magnet

Bore size [mm]	**4, 6, 10**
Port size	M3 x 0.5
AS12□1F-M3-02	○

Specific Product Precautions 2

Be sure to read this before handling the products. For safety instructions as well as actuator and auto switch precautions, refer to the "Handling Precautions for SMC Products" and the "Operation Manual" on the SMC website: https://www.smcworld.com

<Precautions for the standard type ø4 to ø10>

Caution on Mounting Speed Controllers and Fittings

For One-touch fittings and hose nipples

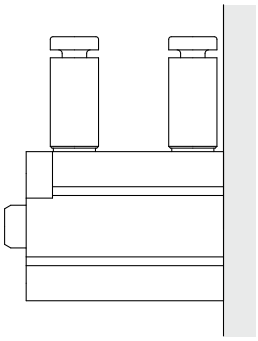

With Auto Switch Magnet

Bore size [mm]		6, 10
Port size		M3 x 0.5
Male connector (with hexagon socket head)	KQ2S02-M3G	○
	KQ2S23-M3G	○
Male connector	KQ2H02-M3G	○
Barb fitting	M-3AU-3 & 4	○
	M-3ALU-3 & 4	○

Without Auto Switch Magnet

Bore size [mm]		4, 6, 10
Port size		M3 x 0.5
Male connector (with hexagon socket head)	KQ2S02-M3G	○
	KQ2S23-M3G	○
Male connector	KQ2H02-M3G	○
Male elbow	KQ2L02-M3G	○
Barb fitting	M-3AU-3 & 4	○
	M-3ALU-3 & 4	○

<Precautions for double rod cylinders>

Mounting

⚠Warning

1. **Do not apply reverse torque to the piston rods sticking out from both sides of this cylinder at the same time. The torque makes connection threads inside loosen, which may cause an accident or malfunction.**
   Install or remove loads while the piston rod width across flat is secured. Do not fix the other side of the piston rod width across flat and apply reverse torque.

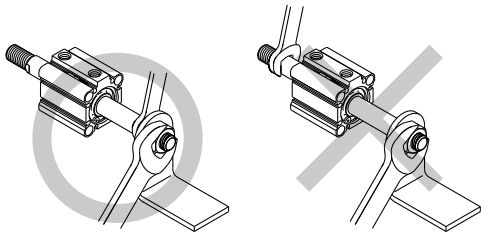

<Precautions for non-rotating rod cylinders>

Mounting

1. Install or remove loads while the piston rod width across flat is secured.

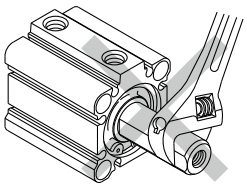

2. Using a non-rotating rod cylinder
   Avoid using the air cylinder in such a way that rotational torque would be applied to the piston rod. If rotational torque is applied, the non-rotating guide will deform, causing a loss of non-rotating accuracy.
   Use the table below as a guide for the allowable rotational torque ranges.

Allowable rotational torque	12	16	20	25	32	40	50	63
N·m or less	0.04	0.15	0.20	0.25	0.44	0.44	0.44	0.44

   Operate the cylinder in such a way that the load to the piston rod is always applied in the axial direction.

3. When a workpiece is secured to the end of the piston rod, ensure that the piston rod is retracted entirely, and place a wrench on the portion of the rod that protrudes beyond the section. Also, tighten in a way that prevents the tightening torque from being applied to the non-rotating guide.

Specific Product Precautions 3

Be sure to read this before handling the products. For safety instructions as well as actuator and auto switch precautions, refer to the "Handling Precautions for SMC Products" and the "Operation Manual" on the SMC website: https://www.smcworld.com

<Precautions for water-resistant cylinders>

Handling Precautions

⚠ Caution

1. If there is a possibility of liquid splashing on cylinder fittings, use insert fittings, self-align fittings, steel piping, etc. Consider the compatibility of liquid components and piping materials before using.
2. When selecting seals, generally use NBR (nitrile rubber) seals with liquids that do not contain chlorine and sulfur, and use FKM (fluoro rubber) seals with liquids that contain chlorine and sulfur. However, depending on the type and the brand of liquid (such as coolant liquid) that splashes on the cylinder, the operating life of seals may be reduced dramatically.

   Examples of coolant liquid

   Shimiron, PA-O-5 (Daido Chemical Industry Co., Ltd.) (NBR seals)
   Noritake Cool, AFG-S (Noritake Co., Ltd.) (NBR seals)
   Yushiroken, S-46S (Yushiro Chemical Industry Co., Ltd.) (NBR seals)
   Yushiroken, EC-50-T3 (Yushiro Chemical Industry Co., Ltd.) (NBR seals)
   Yushiron Oil, No. 23 (Yushiro Chemical Industry Co., Ltd.) (FKM seals)
   Daphne Cut, Hs-1 (Idemitsu Kosan Co., Ltd.) (FKM seals)
3. When the cylinder is exposed to dust or sand, or is used in a place where liquid from the piston rod splashes, use the heavy-duty scraper (-XC4) type.

<Precautions for axial piping type cylinders>

Mounting/Removal

1. Do not remove the hexagon socket head set screw on the side of the rod.
   · Be aware that if the hexagon socket head set screw is removed with compressed air supplied to the cylinder, an internal steel ball could fly out or the compressed air could be discharged, leading to injury to humans or damage to peripheral equipment.

<Precautions for compact cylinders with end lock>

Pneumatic Circuit

⚠ Caution

1. **Do not use 3-position solenoid valves.**
   Avoid use in combination with 3-position solenoid valves (especially closed center metal seal types). If pressure is trapped in the port on the lock mechanism side, the cylinder cannot be locked. Furthermore, even after being locked, the lock may be released after some time, due to air leaking from the solenoid valve and entering the cylinder.
2. **Back pressure is required for releasing the lock.**
   Before starting operation, be sure to control the system so that air is supplied to the side without the lock mechanism as shown in the figure below. There is a possibility that the lock may not be released. (Refer to the section on releasing the lock.)
3. **Release the lock for mounting or adjusting the cylinder.**
   If mounting or other work is performed when the cylinder is locked, the lock unit may be damaged.
4. **Operate with a load ratio of 50% or less.**
   If the load ratio exceeds 50%, this may cause problems such as failure of the lock to release, or damage to the lock unit.
5. **Do not operate multiple cylinders in synchronization.**
   Avoid applications in which two or more end lock cylinders are synchronized to move one workpiece, as one of the cylinder locks may not be able to release when required.
6. **Use a speed controller with meter-out control.**
   Lock cannot be released occasionally by meter-in control.
7. **Be sure to operate completely to the cylinder stroke end on the side with the lock.**
   If the cylinder piston does not reach the end of stroke, locking and unlocking may not be possible.
8. **Adjust the position of an auto switch, so that it could work at the both positions where it is distanced from the stroke and a backlash (2 mm).**
   When a 2-color indicator switch is adjusted for green indication at the stroke end, it may change to red for the backlash return, but this is not abnormal.
9. **Basic circuit**

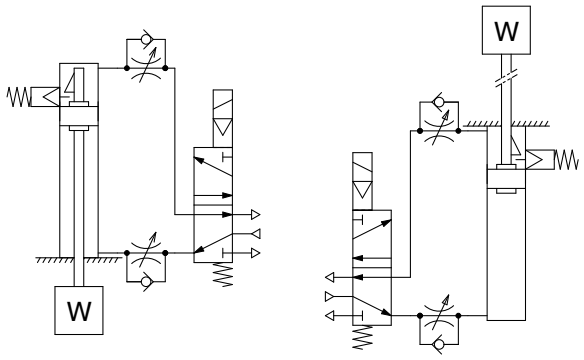

With head end lock **With rod end lock**

Specific Product Precautions 4

Be sure to read this before handling the products. For safety instructions as well as actuator and auto switch precautions, refer to the "Handling Precautions for SMC Products" and the "Operation Manual" on the SMC website: https://www.smcworld.com

<Precautions for compact cylinders with end lock>

Operating Pressure

⚠ Caution

1. Supply air pressure of 0.15 MPa or higher to the port on the side that has the lock mechanism, as it is necessary for releasing the lock.

Exhaust Speed

⚠ Caution

1. When the pressure on the side with the lock mechanism drops to 0.05 MPa or below, the lock engages automatically. If the piping on the side with the lock mechanism is thin and long, or if the speed controller is away from the cylinder port, the lock engagement may take some time due to decline of the exhaust speed. The same result will be caused by clogging of the silencer installed at the EXH port of the solenoid valve.

Releasing the Lock

⚠ Warning

1. Before releasing the lock, be sure to supply air to the side without the lock mechanism, so that there is no load applied to the lock mechanism when it is released. (Refer to the pneumatic circuits.) If the lock is released when the port on the other side is in an exhaust state, and with a load applied to the lock unit, the lock unit may be subjected to an excessive force and be damaged. Also, it is very dangerous because the piston rod will be rushed to move.

<Precautions for compact cylinders with end lock>

Manual Release

⚠ Caution

1. **Manual release (Non-lock type)**
   Insert the accessory bolt from the top of the rubber cap (it is not necessary to remove the rubber cap), and after screwing it into the lock piston, pull it to release the lock. If you stop pulling the bolt, the lock will return to an operational state.
   Thread sizes, pulling forces and strokes are as shown below.

Bore size [mm]	Thread size	Pulling force [N]	Stroke [mm]
20, 25, 32	M2.5 x 0.45 x 25 L or more	4.9	2
40, 50, 63	M3 x 0.5 x 30 L or more	10	3
80, 100	M5 x 0.8 x 40 L or more	24.5	3

Remove the bolt for normal operation.
It can cause lock malfunction or faulty release.

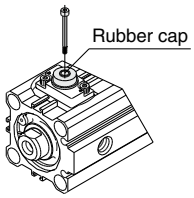

2. **Manual release (Lock type)**
   While pushing the M/O knob, turn it 90° counterclockwise. The lock is released (and remains in a released state) by aligning the ▲ mark on the cap with the ▼ OFF mark on the M/O knob. When locking is desired, turn the M/O knob clockwise 90° while pushing fully, correspond ▲ on cap and ▼ ON mark on the M/O knob. The correct position is confirmed by a click sound "click". If not confirmed, locking is not done.

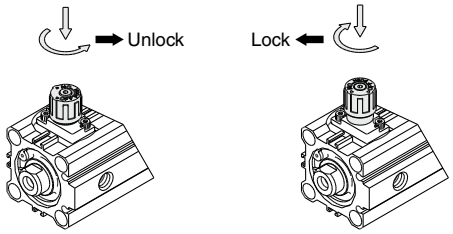

Manually locked state **Manually unlocked state**

⚠ Safety Instructions

These safety instructions are intended to prevent hazardous situations and/or equipment damage. These instructions indicate the level of potential hazard with the labels of **"Caution," "Warning"** or **"Danger."** They are all important notes for safety and must be followed in addition to International Standards (ISO/IEC)*1), and other safety regulations.

⚠ Danger : **Danger** indicates a hazard with a high level of risk which, if not avoided, will result in death or serious injury.

⚠ Warning: **Warning** indicates a hazard with a medium level of risk which, if not avoided, could result in death or serious injury.

⚠ Caution: **Caution** indicates a hazard with a low level of risk which, if not avoided, could result in minor or moderate injury.

*1) ISO 4414: Pneumatic fluid power - General rules and safety requirements for systems and their components
ISO 4413: Hydraulic fluid power - General rules and safety requirements for systems and their components
IEC 60204-1: Safety of machinery - Electrical equipment of machines - Part 1: General requirements
ISO 10218-1: Robots and robotic devices - Safety requirements for industrial robots - Part 1:Robots
etc.

⚠ Warning

1. The compatibility of the product is the responsibility of the person who designs the equipment or decides its specifications.

Since the product specified here is used under various operating conditions, its compatibility with specific equipment must be decided by the person who designs the equipment or decides its specifications based on necessary analysis and test results. The expected performance and safety assurance of the equipment will be the responsibility of the person who has determined its compatibility with the product. This person should also continuously review all specifications of the product referring to its latest catalog information, with a view to giving due consideration to any possibility of equipment failure when configuring the equipment.

2. Only personnel with appropriate training should operate machinery and equipment.

The product specified here may become unsafe if handled incorrectly. The assembly, operation and maintenance of machines or equipment including our products must be performed by an operator who is appropriately trained and experienced.

3. Do not service or attempt to remove product and machinery/ equipment until safety is confirmed.

1. The inspection and maintenance of machinery/equipment should only be performed after measures to prevent falling or runaway of the driven objects have been confirmed.
2. When the product is to be removed, confirm that the safety measures as mentioned above are implemented and the power from any appropriate source is cut, and read and understand the specific product precautions of all relevant products carefully.
3. Before machinery/equipment is restarted, take measures to prevent unexpected operation and malfunction.

4. Our products cannot be used beyond their specifications. Our products are not developed, designed, and manufactured to be used under the following conditions or environments. Use under such conditions or environments is not covered.

1. Conditions and environments outside of the given specifications, or use outdoors or in a place exposed to direct sunlight.
2. Use for nuclear power, railways, aviation, space equipment, ships, vehicles, military application, equipment affecting human life, body, and property, fuel equipment, entertainment equipment, emergency shut-off circuits, press clutches, brake circuits, safety equipment, etc., and use for applications that do not conform to standard specifications such as catalogs and operation manuals.
3. Use for interlock circuits, except for use with double interlock such as installing a mechanical protection function in case of failure. Please periodically inspect the product to confirm that the product is operating properly.

⚠ Caution

We develop, design, and manufacture our products to be used for automatic control equipment, and provide them for peaceful use in manufacturing industries.
Use in non-manufacturing industries is not covered.
Products we manufacture and sell cannot be used for the purpose of transactions or certification specified in the Measurement Act.
The new Measurement Act prohibits use of any unit other than SI units in Japan.

Limited warranty and Disclaimer/ Compliance Requirements

The product used is subject to the following "Limited warranty and Disclaimer" and "Compliance Requirements".
Read and accept them before using the product.

Limited warranty and Disclaimer

1. The warranty period of the product is 1 year in service or 1.5 years after the product is delivered, whichever is first.*2)
   Also, the product may have specified durability, running distance or replacement parts. Please consult your nearest sales branch.
2. For any failure or damage reported within the warranty period which is clearly our responsibility, a replacement product or necessary parts will be provided.
   This limited warranty applies only to our product independently, and not to any other damage incurred due to the failure of the product.
3. Prior to using SMC products, please read and understand the warranty terms and disclaimers noted in the specified catalog for the particular products.

***2) Vacuum pads are excluded from this 1 year warranty.**
A vacuum pad is a consumable part, so it is warranted for a year after it is delivered.
Also, even within the warranty period, the wear of a product due to the use of the vacuum pad or failure due to the deterioration of rubber material are not covered by the limited warranty.

Compliance Requirements

1. The use of SMC products with production equipment for the manufacture of weapons of mass destruction (WMD) or any other weapon is strictly prohibited.
2. The exports of SMC products or technology from one country to another are governed by the relevant security laws and regulations of the countries involved in the transaction. Prior to the shipment of a SMC product to another country, assure that all local rules governing that export are known and followed.

Revision History

Edition B
* The body shape of the large bore size cylinder has been changed.
* The -XB10A has been added to the standard type, double acting, single rod.
* The number of pages has been decreased from 228 to 216. OS

Edition C
* The double rod type water-resistant cylinder has been added.
* Dimensions pages for products with a mounting bracket have been collected.
* The compact foot type has been added to mounting brackets.
* The compact cylinder with stable lubrication function (Lube-retainer) has been added.

Edition C
* Stainless steel brackets (single knuckle joint, double knuckle joint, and rod end nut) have been added.
* The XB14 (With heat-resistant auto switch) has been added.
* Part numbers for products with a rod end bracket and/or a mounting bolt have been added.
* The number of pages has been decreased from 216 to 196. YQ

Edition D
* Bore sizes ø4, ø6, and ø10 have been added.
* The number of pages has been increased from 196 to 204.

⚠ Safety Instructions Be sure to read the "Handling Precautions for SMC Products" (M-E03-3) and "Operation Manual" before use.

SMC Corporation
Akihabara UDX 15F,
4-14-1, Sotokanda, Chiyoda-ku, Tokyo 101-0021, JAPAN
Phone: 03-5207-8249 Fax: 03-5298-5362
https://www.smcworld.com
© 2024 SMC Corporation All Rights Reserved

Specifications are subject to change without prior notice
and any obligation on the part of the manufacturer.